# FCC PART 15 SUBPART C TEST REPORT

## FCC PART 15.249

| | |
|---|---|
| **Report Reference No.....** | **: MAX25100007P01-R01** |
| **FCC ID.....** | **: 2BUE6-LQ-YK-1** |
| Compiled by ( position+printed name+signature).. | : Engineer/ Cindy Zheng |
| Supervised by ( position+printed name+signature).. | : Manager/Haley Wen |
| Approved by ( position+printed name+signature).. | : RF Manager/ Vivian Jiang |
| Date of issue..... | : January 15, 2026 |

| | |
|---|---|
| **Testing Laboratory Name.....** | **: MAXLAB Testing Co.,Ltd.** |
| Address..... | : 1/F, Building B, Xinshidai GR Park,Shiyan Street, Bao'an District, Shenzhen,Guangdong, 518052, People’s Republic of China |
| **Applicant’s name.....** | **: Shenzhen Langqi Optoelectronic Technology Co., Ltd.** |
| Address..... | : 309, 3/F, Building B,ElectricPowerPlant, No. 1 Yonghe Road, Longteng Community, Shiyan Street, Baoan Dist. Shenzhen City |
| **Test specification.....** | **:** |
| Standard..... | : **FCC CFR Title 47 Part 15 Subpart C Section 15.249**<br>**ANSI C63.10:2020** |

**MAXLAB Testing Co.,Ltd.All rights reserved.**
This publication may be reproduced in whole or in part for non-commercial purposes as long as the MAXLAB Testing Co.,Ltd. is acknowledged as copyright owner and source of the material. MAXLAB Testing Co.,Ltd. takes no responsibility for and will not assume liability for damages resulting from the reader's interpretation of the reproduced material due to its placement and context.

| | |
|---|---|
| **Equipment description.....** | **: 2.4G remote** |
| Trade Mark..... | : ONIDEK |
| Manufacturer..... | : Shenzhen Langqi Optoelectronic Technology Co., Ltd. |
| Model/Type reference..... | : LQ-YK-1 |
| Listed Models ..... | : N/A |
| Modulation ..... | : GFSK |
| Frequency..... | 2420MHz |
| Rating..... | : DC 3.0V |
| Result..... | : **PASS** |

# TEST REPORT

| | | |
|---|---|---|
| **Equipment under Test** | **:** | **2.4G remote** |
| Model /Type | : | LQ-YK-1 |
| Listed Models | : | N/A |
| Model Declaration | : | N/A |
| **Applicant** | **:** | **Shenzhen Langqi Optoelectronic Technology Co., Ltd.** |
| Address | : | 309, 3/F, Building B,ElectricPowerPlant, No. 1 Yonghe Road, Longteng Community, Shiyan Street, Baoan Dist. Shenzhen City |
| **Manufacturer** | **:** | **Shenzhen Langqi Optoelectronic Technology Co., Ltd.** |
| Address | : | 309, 3/F, Building B,ElectricPowerPlant, No. 1 Yonghe Road, Longteng Community, Shiyan Street, Baoan Dist. Shenzhen City |

| | |
|---|---|
| **Test Result**: | **PASS** |

The test report merely corresponds to the test sample.
It is not permitted to copy extracts of these test result without the written permission of the test laboratory.

# Contents


1 TEST STANDARDS ..... 4

2 SUMMARY ..... 5

2.1 General Remarks 5
2.2 Product Description 5
2.3 Equipment Under Test 5
2.4 Short description of the Equipment under Test (EUT) 5
2.5 EUT operation mode 6
2.6 Block Diagram of Test Setup 6
2.7 Related Submittal(s) / Grant (s) 6
2.8 Modifications 6

3 TEST ENVIRONMENT ..... 7

3.1 Address of the test laboratory 7
3.2 Test Facility 7
3.3 Environmental conditions 7
3.4 Summary of measurement results 8
3.5 Statement of the measurement uncertainty 8
3.6 Equipments Used during the Test 9

4 TEST CONDITIONS AND RESULTS ..... 11

4.1 AC Power Conducted Emission 11
4.2 Radiated Emissions and Band Edge 12
4.3 Bandwidth of Frequncy Band Edge 15
4.4 Channel Bandwidth 22
4.5 Antenna Requirement 25

5 TEST SETUP PHOTOS OF THE EUT ..... 25

6 PHOTOS OF THE EUT ..... 26

# 1 TEST STANDARDS

The tests were performed according to following standards:

FCC Rules Part 15.249: Frequency Hopping, Direct Spread Spectrum and Hybrid Systems that are in operation within the bands of 902-928 MHz, 2400-2483.5 MHz, and 5725-5850 MHz and 24.0-24.25 GHz
ANSI C63.10-2020: American National Standard for Testing Unlicensed Wireless Devices

# 2 SUMMARY

## 2.1 General Remarks

| | | |
|---|---|---|
| Date of receipt of test sample | : | October 21, 2025 |
| | | |
| Testing commenced on | : | October 27, 2025 |
| | | |
| Testing concluded on | : | October 31, 2025 |

## 2.2 Product Description

| | |
|---|---|
| Product Description: | 2.4G remote |
| Model/Type reference: | LQ-YK-1 |
| Listed Models: | N/A |
| Rating: | DC 3.0V |
| Testing sample ID： | MAX25100007P01-R01-1# (Engineer sample)<br>MAX25100007P01-R01-2# (Normal sample) |
| **2.4G** | |
| Supported type: | 2.4G |
| Modulation: | GFSK |
| Operation frequency: | 2420MHz |
| Channel number: | 1 |
| Antenna type: | PCB antenna |
| Antenna gain: | -0.68 dBi |

## 2.3 Equipment Under Test

### Power supply system utilised

| | | | | | |
|---|---|---|---|---|---|
| Power supply voltage | : | ○ | 230V / 50 Hz | ○ | 120V / 60Hz |
| | | ● | 3.0V DC | ○ | 24 V DC |
| | | ○ | Other (specified in blank below) | | |

## 2.4 Short description of the Equipment under Test (EUT)

This is a 2.4G remote.
For more details, refer to the user's manual of the EUT.

## 2.5 EUT operation mode

The Applicant provides communication tools software(Engineer mode) to control the EUT for staying in continuous transmitting (Duty Cycle more than 98%) and receiving mode for testing .There are 40 channels provided to the EUT and Channel 01 were selected to test.

**Operation Frequency：**

| Channel | Frequency (MHz) |
|---|---|
| **00** | **2420** |

## 2.6 Block Diagram of Test Setup

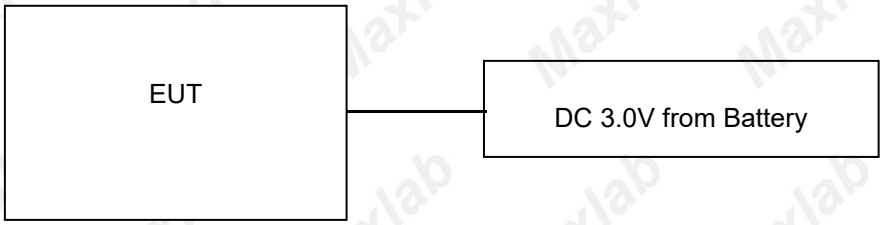


## 2.7 Related Submittal(s) / Grant (s)

This submittal(s) (test report) is intended for the device filing to comply with Section 15.249 of the FCC Part 15, Subpart C Rules.

## 2.8 Modifications

No modifications were implemented to meet testing criteria.

# 3 TEST ENVIRONMENT

## 3.1 Address of the test laboratory

**MAXLAB Testing Co.,Ltd.**
1/F, Building B, Xinshidai GR Park,Shiyan Street, Bao'an District, Shenzhen,Guangdong, 518052, People's Republic of China

## 3.2 Test Facility

**FCC-Registration No.: 562200 Designation Number: CN1338**
MAXLAB Testing Co.,Ltd. has been listed on the US Federal Communications Commission list of test facilities recognized to perform electromagnetic emissions measurements.

**Industry Canada Registration Number. Is: 11093A CAB identifier: CN0019**
The Laboratory has been registered by Certification and Engineering Bureau of Industry Canada for radio equipment testing.

**A2LA-Lab Cert. No.: 4707.01**
MAXLAB Testing Co.,Ltd. has been listed by American Association for Laboratory Accreditation to perform electromagnetic emission measurement.

The 3m-Semi anechoic test site fulfils CISPR 16-1-4 according to ANSI C63.10 and CISPR 16-1-4:2010.

## 3.3 Environmental conditions

During the measurement the environmental conditions were within the listed ranges:
Radiated Emission:

| | |
|---|---|
| Temperature: | 23 ° C |
| | |
| Humidity: | 44 % |
| | |
| Atmospheric pressure: | 950-1050mbar |

AC Main Conducted testing：

| | |
|---|---|
| Temperature: | 24 ° C |
| | |
| Humidity: | 47 % |
| | |
| Atmospheric pressure: | 950-1050mbar |

Conducted testing：

| | |
|---|---|
| Temperature: | 24 ° C |
| | |
| Humidity: | 46 % |
| | |
| Atmospheric pressure: | 950-1050mbar |

## 3.4 Summary of measurement results

| FCC Part15 (15.249) , Subpart C | | | |
|---|---|---|---|
| Standard Section | Test Item | Judgment | Remark |
| FCC part 15.203 | Antenna requirement | PASS | |
| FCC part 15.207 | AC Power Line Conducted Emission | N/A | |
| FCC part 15.249 | Fundamental &Radiated Spurious Emission Measurement | PASS | |
| FCC part 15.215 | 20dB Channel Bandwidth | PASS | |
| FCC part 15.205 | Band Edge | PASS | |

Remark:
1. The measurement uncertainty is not included in the test result.
2. We tested all test mode and recorded worst case in report
3. " N/A" denotes test is not applicable in this Test Report

## 3.5 Statement of the measurement uncertainty

The data and results referenced in this document are true and accurate. The reader is cautioned that there may be errors within the calibration limits of the equipment and facilities. The measurement uncertainty was calculated for all measurements listed in this test report acc. to TR-100028-01" Electromagnetic compatibility and Radio spectrum Matters (ERM);Uncertainties in the measurement of mobile radio equipment characteristics; Part 1" and TR-100028-02 "Electromagnetic compatibility and Radio spectrum Matters (ERM);Uncertainties in the measurement of mobile radio equipment characteristics; Part 2 " and is documented in the MAXLAB Testing Co.,Ltd.quality system acc. to DIN EN ISO/IEC 17025. Furthermore, component and process variability of devices similar to that tested may result in additional deviation. The manufacturer has the sole responsibility of continued compliance of the device.

Hereafter the best measurement capability for MAXLAB Testing Co.,Ltd.:

| Test | Range | Measurement Uncertainty | Notes |
|---|---|---|---|
| Radiated Emission | 9KHz~30MHz | 3.82 dB | (1) |
| Radiated Emission | 30~1000MHz | 4.06 dB | (1) |
| Radiated Emission | 1~18GHz | 5.14 dB | (1) |
| Radiated Emission | 18-40GHz | 5.38 dB | (1) |
| Conducted Disturbance | 0.15~30MHz | 2.14 dB | (1) |
| Transmitter power conducted | 1~40GHz | 0.57 dB | (1) |
| Conducted spurious emission | 1~40GHz | 1.60 dB | (1) |
| OBW | 1~40GHz | 25 Hz | (1) |

(1) This uncertainty represents an expanded uncertainty expressed at approximately the 95% confidence level using a coverage factor of k=2.

## 3.6 Equipments Used during the Test

| Conducted Emission | | | | | |
|---|---|---|---|---|---|
| **Test Equipment** | **Manufacturer** | **Model** | **Serial No.** | **Date of Cal.** | **Due Date** |
| Shielding Room | ZhongYu Electron | 7.3(L)x3.1(W)x2.9(H) | BSL252 | 2025-10-27 | 2026-10-26 |
| EMI Test Receiver | R&S | ESCI 7 | BSL552 | 2025-10-27 | 2026-10-26 |
| Coaxial Switch | ANRITSU CORP | MP59B | BSL225 | 2025-10-27 | 2026-10-26 |
| ENV216 2-L-V-NETZNACHB.DE | ROHDE&SCHWARZ | ENV216 | BSL226 | 2025-10-27 | 2026-10-26 |
| Coaxial Cable | BSL | N/A | BSL227 | N/A | N/A |
| EMI Test Software | AUDIX | E3 | N/A | N/A | N/A |
| Thermo meter | KTJ | TA328 | BSL233 | 2025-10-27 | 2026-10-26 |
| Absorbing clamp | Elektronik-Feinmechanik | MDS21 | BSL229 | 2025-10-27 | 2026-10-26 |
| LISN | R&S | ENV216 | 308 | 2025-10-27 | 2026-10-26 |
| LISN | R&S | ENV216 | 314 | 2025-10-27 | 2026-10-26 |

| Radiation Test equipment | | | | | |
|---|---|---|---|---|---|
| **Test Equipment** | **Manufacturer** | **Model** | **Serial No.** | **Date of Cal.** | **Due Date** |
| 3m Semi- Anechoic Chamber | ZhongYu Electron | 9.2(L)*6.2(W)* 6.4(H) | BSL250 | 2025-10-27 | 2026-10-26 |
| Control Room | ZhongYu Electron | 6.2(L)*2.5(W)* 2.4(H) | BSL251 | N/A | N/A |
| EMI Test Receiver | Rohde & Schwarz | ESU26 | BSL203 | 2025-10-27 | 2026-10-26 |
| BiConiLog Antenna | SCHWARZBECK MESS-ELEKTRONIK | VULB9163 | BSL214 | 2025-10-27 | 2026-10-26 |
| Double -ridged waveguide horn | SCHWARZBECK MESS-ELEKTRONIK | BBHA 9120 D | BSL208 | 2025-10-27 | 2026-10-26 |
| Horn Antenna | ETS-LINDGREN | 3160 | BSL217 | 2025-10-27 | 2026-10-26 |
| EMI Test Software | AUDIX | E3 | N/A | N/A | N/A |
| Coaxial Cable | BSL | N/A | BSL213 | 2025-10-27 | 2026-10-26 |
| Coaxial Cable | BSL | N/A | BSL211 | 2025-10-27 | 2026-10-26 |
| Coaxial cable | BSL | N/A | BSL210 | 2025-10-27 | 2026-10-26 |
| Coaxial Cable | BSL | N/A | BSL212 | 2025-10-27 | 2026-10-26 |
| Amplifier(100kHz-3GHz) | HP | 8347A | BSL204 | 2025-10-27 | 2026-10-26 |
| Amplifier(2GHz-20GHz) | HP | 84722A | BSL206 | 2025-10-27 | 2026-10-26 |
| Amplifier (18-26GHz) | Rohde & Schwarz | AFS33-18002 650-30-8P-44 | BSL218 | 2025-10-27 | 2026-10-26 |
| Band filter | Amindeon | 82346 | BSL219 | 2025-10-27 | 2026-10-26 |
| Power Meter | Anritsu | ML2495A | BSL540 | 2025-10-27 | 2026-10-26 |
| Power Sensor | Anritsu | MA2411B | BSL541 | 2025-10-27 | 2026-10-26 |

| | | | | | |
|---|---|---|---|---|---|
| Wideband Radio Communication Tester | Rohde & Schwarz | CMW500 | BSL575 | 2025-10-27 | 2026-10-26 |
| Splitter | Agilent | 11636B | BSL237 | 2025-10-27 | 2026-10-26 |
| Loop Antenna | ZHINAN | ZN30900A | BSL534 | 2025-10-27 | 2026-10-26 |
| Breitband hornantenne | SCHWARZBECK | BBHA 9170 | BSL579 | 2025-10-27 | 2026-10-26 |
| Amplifier | TDK | PA-02-02 | BSL574 | 2025-10-27 | 2026-10-26 |
| Amplifier | TDK | PA-02-03 | BSL576 | 2025-10-27 | 2026-10-26 |
| PSA Series Spectrum Analyzer | Rohde & Schwarz | FSP | BSL578 | 2025-10-27 | 2026-10-26 |
| Antenna tower | SKET | BK-4AT | BSL589 | 2025-10-27 | 2026-10-26 |

| **RF Conducted Test:** | | | | | |
|---|---|---|---|---|---|
| **Test Equipment** | **Manufacturer** | **Model** | **Serial No.** | **Date of Cal.** | **Due Date** |
| MXA Signal Analyzer | Agilent | N9020A | BSL566 | 2025-10-27 | 2026-10-26 |
| EMI Test Receiver | R&S | ESCI 7 | BSL552 | 2025-10-27 | 2026-10-26 |
| Spectrum Analyzer | Agilent | E4440A | BSL533 | 2025-10-27 | 2026-10-26 |
| MXG vector Signal Generator | Agilent | N5182A | BSL567 | 2025-10-27 | 2026-10-26 |
| ESG Analog Signal Generator | Agilent | E4428C | BSL568 | 2025-10-27 | 2026-10-26 |
| USB RF Power Sensor | DARE | RPR3006W | BSL569 | 2025-10-27 | 2026-10-26 |
| RF Switch Box | Shongyi | RFSW3003328 | BSL571 | 2025-10-27 | 2026-10-26 |
| Programmable Constant Temp & Humi Test Chamber | WEWON | WHTH-150L-40-880 | BSL572 | 2025-10-27 | 2026-10-26 |

# 4 TEST CONDITIONS AND RESULTS

## 4.1 AC Power Conducted Emission

**TEST CONFIGURATION**

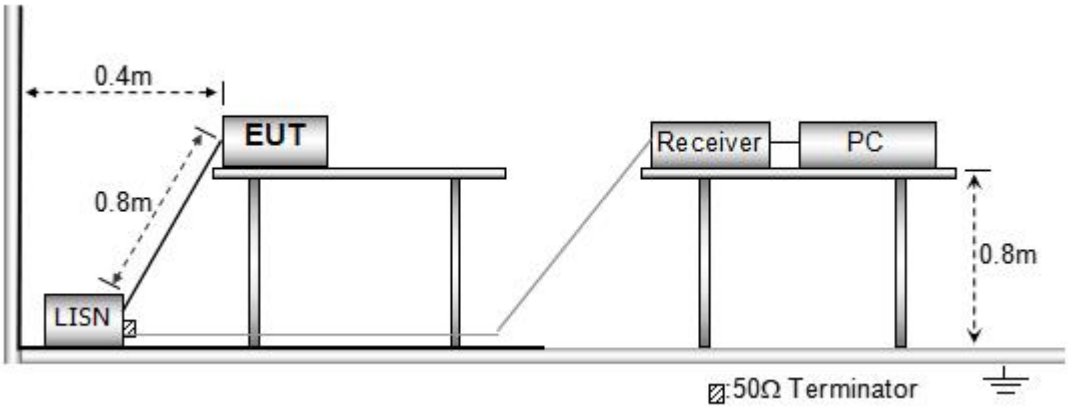


**TEST PROCEDURE**

1 The equipment was set up as per the test configuration to simulate typical actual usage per the user's manual. The EUT is a tabletop system, a wooden table with a height of 0.8 meters is used and is placed on the ground plane as per ANSI C63.10-2020.
2 Support equipment, if needed, was placed as per ANSI C63.10-2020
3 All I/O cables were positioned to simulate typical actual usage as per ANSI C63.10-2020
4 The EUT received power from adapter, the adapter received AC120V/60Hz and AC 240V/60Hz power through a Line Impedance Stabilization Network (LISN) which supplied power source and was grounded to the ground plane.
5 All support equipments received AC power from a second LISN, if any.
6 The EUT test program was started. Emissions were measured on each current carrying line of the EUT using a spectrum Analyzer / Receiver connected to the LISN powering the EUT.The LISN has two monitoring points: Line 1 (Hot Side) and Line 2 (Neutral Side). Two scans were taken: one with Line 1 connected to Analyzer / Receiver and Line 2 connected to a 50 ohm load; the second scan had Line 1 connected to a 50 ohm load and Line 2 connected to the Analyzer / Receiver.
7 Analyzer / Receiver scanned from 150 KHz to 30MHz for emissions in each of the test modes.
8 During the above scans, the emissions were maximized by cable manipulation.

**AC Power Conducted Emission Limit**

For intentional device, according to § 15.207(a) AC Power Conducted Emission Limits is as following:

| Frequency range (MHz) | Limit (dBuV) | |
|---|---|---|
| | Quasi-peak | Average |
| 0.15-0.5 | 66 to 56* | 56 to 46* |
| 0.5-5 | 56 | 46 |
| 5-30 | 60 | 50 |
| * Decreases with the logarithm of the frequency. | | |

**TEST RESULTS**

The EUT is powered by the Battery, So this test item is not applicable for the EUT.

## 4.2 Radiated Emissions and Band Edge

**TEST CONFIGURATION**

Frequency range 9 KHz – 30MHz

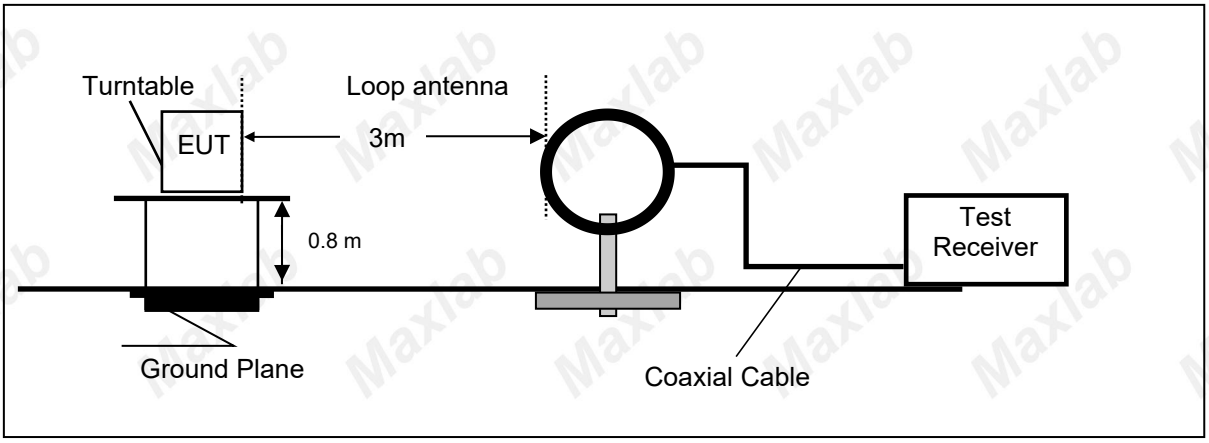


Frequency range 30MHz – 1000MHz

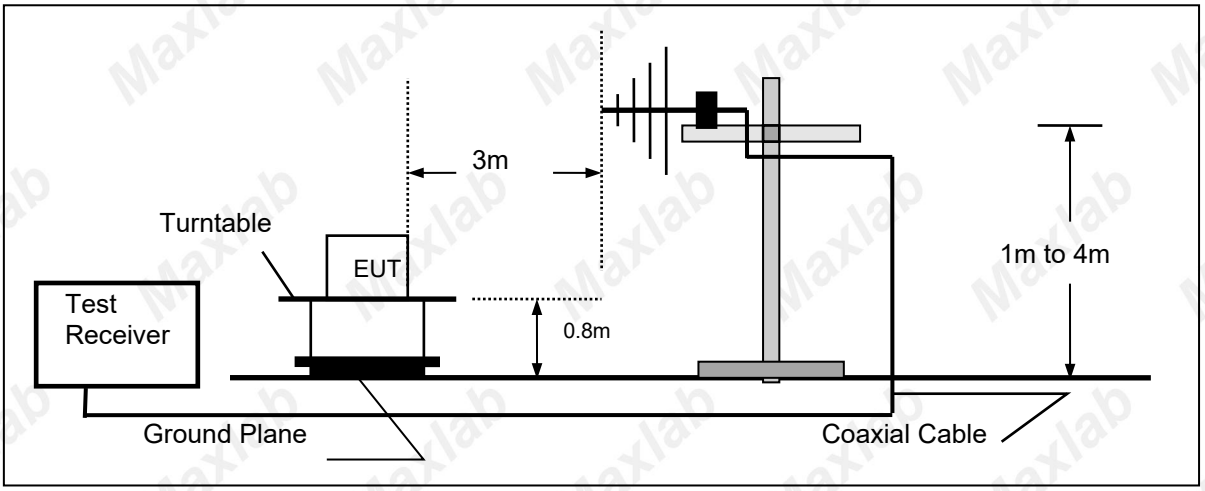


Frequency range above 1GHz-25GHz

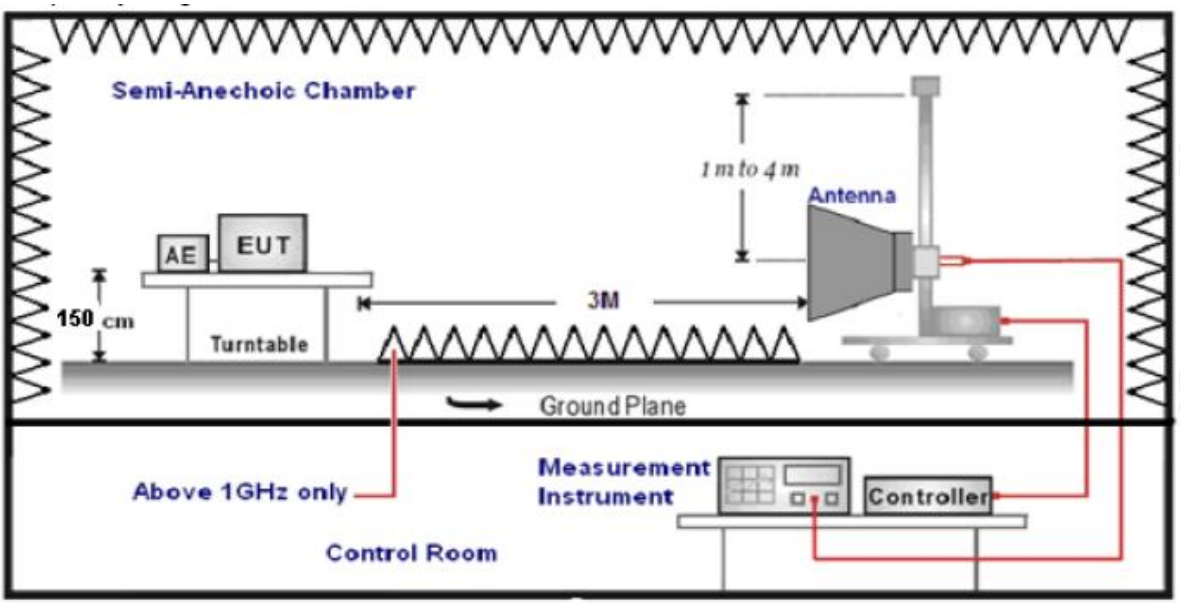


## TEST PROCEDURE

1. The EUT was placed on a turn table which is 0.8m above ground plane when testing frequency range 9 KHz –1GHz;the EUT was placed on a turn table which is 1.5m above ground plane when testing frequency range 1GHz – 25GHz.
2. Maximum procedure was performed by raising the receiving antenna from 1m to 4m and rotating the turn table from 0℃ to 360℃ to acquire the highest emissions from EUT.
3. And also, each emission was to be maximized by changing the polarization of receiving antenna both horizontal and vertical.
4. Repeat above procedures until all frequency measurements have been completed.
5. The EUT minimum operation frequency was 2420MHz and maximum operation frequency was 2420MHz.so radiated emission test frequency band from 9KHz to 25GHz.
6. The distance between test antenna and EUT as following table states:

| Test Frequency range | Test Antenna Type | Test Distance |
|---|---|---|
| 9KHz-30MHz | Active Loop Antenna | 3 |
| 30MHz-1GHz | Ultra-Broadband Antenna | 3 |
| 1GHz-18GHz | Double Ridged Horn Antenna | 3 |
| 18GHz-25GHz | Horn Anternna | 1 |

7. Setting test receiver/spectrum as following table states:

| Test Frequency range | Test Receiver/Spectrum Setting | Detector |
|---|---|---|
| 9KHz-150KHz | RBW=200Hz/VBW=3KHz,Sweep time=Auto | QP |
| 150KHz-30MHz | RBW=9KHz/VBW=100KHz,Sweep time=Auto | QP |
| 30MHz-1GHz | RBW=120KHz/VBW=1000KHz,Sweep time=Auto | QP |
| 1GHz-40GHz | Peak Value: RBW=1MHz/VBW=3MHz, Sweep time=Auto<br>Average Value: RBW=1MHz/VBW=10Hz, Sweep time=Auto | Peak |

## Field Strength Calculation

The field strength is calculated by adding the Antenna Factor and Cable Factor and subtracting the Amplifier Gain and Duty Cycle Correction Factor(if any) from the measured reading. The basic equation with a sample calculation is as follows:

**FS = RA + AF + CL - AG**

| | |
|---|---|
| Where FS = Field Strength | CL = Cable Attenuation Factor (Cable Loss) |
| RA = Reading Amplitude | AG = Amplifier Gain |
| AF = Antenna Factor | |

Transd=AF +CL-AG

**RADIATION LIMIT**

For intentional device, according to § 15.209(a), the general requirement of field strength of radiated emission from intentional radiators at a distance of 3 meters shall not exceed the following table. According to § 15.247(d), in any 100kHz bandwidth outside the frequency band in which the EUT is operating, the radio frequency power that is produced by the intentional radiator shall be at least 20dB below that in the100kHz bandwidth within the band that contains the highest level of desired power.

The pre-test have done for the EUT in three axes and found the worst emission at position shown in test setup photos.

| Frequency (MHz) | Distance (Meters) | Radiated (dBμV/m) | Radiated (μV/m) |
|---|---|---|---|
| 0.009-0.49 | 3 | 20log(2400/F(KHz))+40log(300/3) | 2400/F(KHz) |
| 0.49-1.705 | 3 | 20log(24000/F(KHz))+ 40log(30/3) | 24000/F(KHz) |
| 1.705-30 | 3 | 20log(30)+ 40log(30/3) | 30 |
| 30-88 | 3 | 40.0 | 100 |
| 88-216 | 3 | 43.5 | 150 |
| 216-960 | 3 | 46.0 | 200 |
| Above 960 | 3 | 54.0 | 500 |

**TEST RESULTS**

Remark:

1. This test was performed with EUT in X, Y, Z position and the worse case was found when EUT in X position.
2. 2.4G were tested at Low, Middle, and High channel and recorded worst mode at 2.4G 1Mpbs.
3. Radiated emission test from 9 KHz to 10th harmonic of fundamental was verified, and no emission found except system noise floor in 9 KHz to 30MHz and not recorded in this report.

**For 30MHz-1GHz**

Horizontal

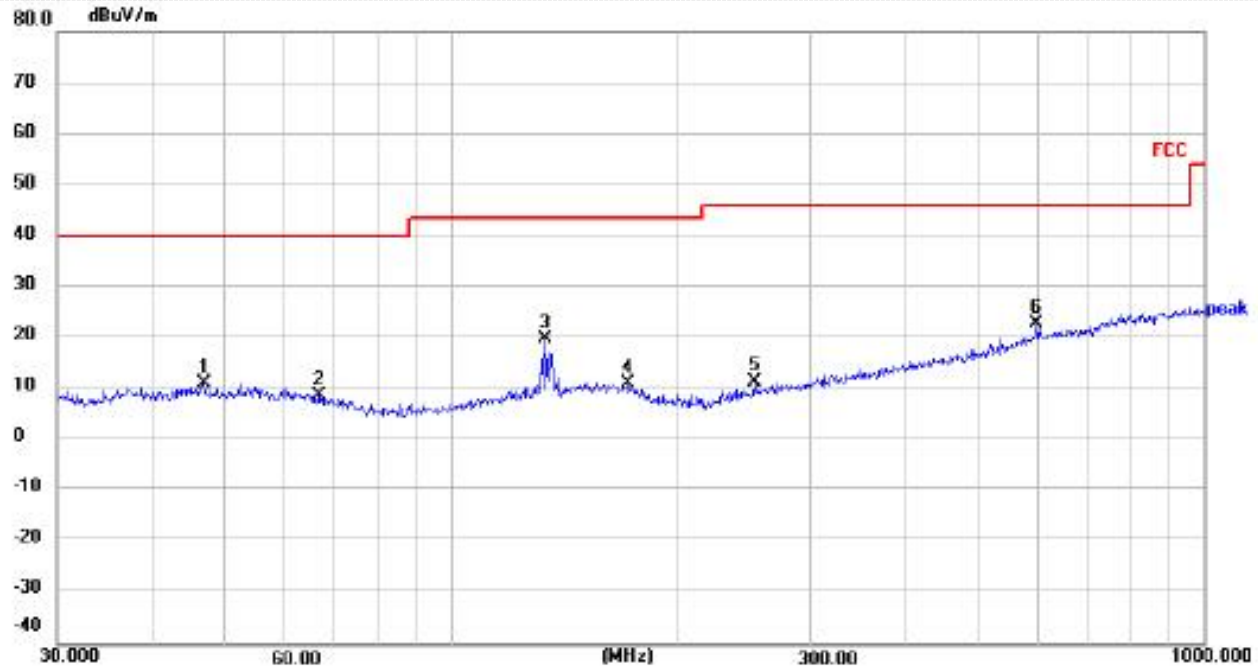


| No. | Frequency (MHz) | Reading (dBuV) | Factor (dB/m) | Level (dBuV/m) | Limit (dBuV/m) | Margin (dB) | Detector | Height (cm) | Azimuth (deg.) | P/F |
|---|---|---|---|---|---|---|---|---|---|---|
| 1 | 46.8303 | 27.53 | -16.47 | 11.06 | 40.00 | -28.94 | peak | 100 | 360 | P |
| 2 | 66.9669 | 26.93 | -18.16 | 8.77 | 40.00 | -31.23 | peak | 100 | 360 | P |
| 3 | 133.6188 | 36.84 | -17.05 | 19.79 | 43.50 | -23.71 | peak | 100 | 360 | P |
| 4 | 171.9946 | 27.74 | -16.50 | 11.24 | 43.50 | -32.26 | peak | 100 | 360 | P |
| 5 | 252.9482 | 28.64 | -17.26 | 11.38 | 46.00 | -34.62 | peak | 100 | 360 | P |
| 6 * | 599.3212 | 30.60 | -7.87 | 22.73 | 46.00 | -23.27 | peak | 100 | 360 | P |

Note:1).Level (dBμV/m)= Reading (dBμV)+ Factor (dB/m)

2). Factor(dB/m)=Antenna Factor (dB/m) + Cable loss (dB) - Pre Amplifier gain (dB)

3). Margin(dB) = Level (dBμV/m) - Limit (dBμV/m)

Vertical

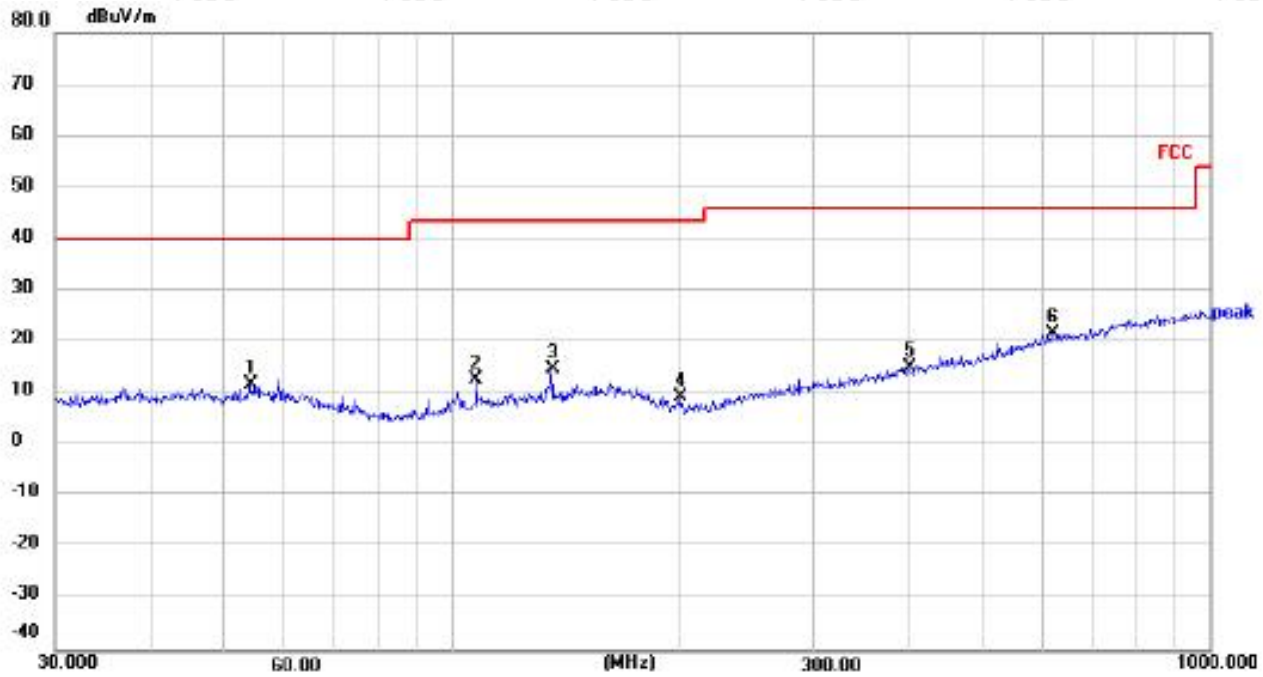


| No. | Frequency (MHz) | Reading (dBuV) | Factor (dB/m) | Level (dBuV/m) | Limit (dBuV/m) | Margin (dB) | Detector | Height (cm) | Azimuth (deg.) | P/F |
|---|---|---|---|---|---|---|---|---|---|---|
| 1 | 54.2610 | 28.52 | -16.78 | 11.74 | 40.00 | -28.26 | peak | 100 | 0 | P |
| 2 | 107.8877 | 31.85 | -19.15 | 12.70 | 43.50 | -30.80 | peak | 100 | 0 | P |
| 3 | 135.5062 | 31.71 | -16.96 | 14.75 | 43.50 | -28.75 | peak | 100 | 0 | P |
| 4 | 199.9856 | 28.66 | -19.32 | 9.34 | 43.50 | -34.16 | peak | 100 | 0 | P |
| 5 | 400.4319 | 28.11 | -13.09 | 15.02 | 46.00 | -30.98 | peak | 100 | 0 | P |
| 6 * | 618.5369 | 29.21 | -7.56 | 21.65 | 46.00 | -24.35 | peak | 100 | 0 | P |

Note:1).Level (dBμV/m)= Reading (dBμV)+ Factor (dB/m)

2). Factor(dB/m)=Antenna Factor (dB/m) + Cable loss (dB) - Pre Amplifier gain (dB)

3). Margin(dB) = Level (dBμV/m) - Limit (dBμV/m)

**For 1GHz to 25GHz**

***GFSK (above 1GHz)***

| **Frequency(MHz):** | | | **2420** | | | **Peak value** | | |
|---|---|---|---|---|---|---|---|---|
| Frequency (MHz) | Read Level (dBuV) | Antenna Factor (dB/m) | Cable Loss (dB) | Preamp Factor (dB) | Level (dBuV/m) | Limit Line (dBuV/m) | Over Limit (dB) | polarization |
| 4840.00 | 55.89 | 21.52 | 3.52 | 33.12 | 47.81 | 74 | -26.19 | Vertical |
| 4840.00 | 50.76 | 23.65 | 4.56 | 33.08 | 45.89 | 74 | -28.11 | Vertical |
| 7260.00 | 45.34 | 25.58 | 6.15 | 33.57 | 43.5 | 74 | -30.5 | Horizontal |
| 7260.00 | 40.21 | 27.68 | 6.98 | 33.26 | 41.61 | 74 | -32.39 | Horizontal |

**Average value:**

| Frequency (MHz) | Read Level (dBuV) | Antenna Factor (dB/m) | Cable Loss (dB) | Preamp Factor (dB) | Level (dBuV/m) | Limit Line (dBuV/m) | Over Limit (dB) | polarization |
|---|---|---|---|---|---|---|---|---|
| 4840.00 | 45.52 | 21.52 | 3.52 | 33.12 | 37.44 | 54 | -16.56 | Vertical |
| 4840.00 | 40.29 | 23.65 | 4.56 | 33.08 | 35.42 | 54 | -18.58 | Vertical |
| 7260.00 | 35.71 | 25.58 | 6.15 | 33.57 | 33.87 | 54 | -20.13 | Horizontal |
| 7260.00 | 30.25 | 27.68 | 6.98 | 33.26 | 31.65 | 54 | -22.35 | Horizontal |

1. *Final Level =Receiver Read level + Antenna Factor + Cable Loss – Preamplifier Factor*
2. *The emission levels of other frequencies are very lower than the limit and not show in test report.*

## 4.3 BANDWIDTH OF FREQUENCY BAND EDGE

4.3.1 Test Requirement:

<table>
<tr><td>Test Requirement:</td><td>FCC Part15 C Section 15.209 and 15.205</td></tr>
<tr><td>Test Method:</td><td>ANSI C63.10:2020</td></tr>
<tr><td>Test Frequency Range:</td><td>All of the restrict bands were tested, only the worst band's (2310MHz to 2500MHz) data was showed.</td></tr>
<tr><td>Test site:</td><td>Measurement Distance: 3m</td></tr>
<tr><td>Receiver setup:</td><td>
<table>
<tr><td>Frequency</td><td>Detector</td><td>RBW</td><td>VBW</td><td>Value</td></tr>
<tr><td rowspan="2">Above 1GHz</td><td>Peak</td><td>1MHz</td><td>3MHz</td><td>Peak</td></tr>
<tr><td>Average</td><td>1MHz</td><td>3MHz</td><td>Average</td></tr>
</table>
</td></tr>
</table>

Emissions radiated outside of the specified frequency bands, except for harmonics, shall be attenuated by at least 50 dB below the level of the fundamental or to the general radiated emission limits in § 15.209, whichever is the lesser attenuation

4.3.2 TEST PROCEDURE

Above 1GHz test procedure as below:

a. 1. The EUT was placed on the top of a rotating table 1.5 meters above the ground at a 3 meter camber. The table was rotated 360 degrees to determine the position of the highest radiation.
b. The EUT was set 3 meters away from the interference-receiving antenna, which was mounted on the top of a variable-height antenna tower.
c. The antenna height is varied from one meter to four meters above the ground to determine the maximum value of the field strength. Both horizontal and vertical polarizations of the antenna are set to make the measurement.
d. For each suspected emission, the EUT was arranged to its worst case and then the antenna was tuned to heights from 1 meter to 4 meters and the rota table was turned from 0 degrees to 360 degrees to find the maximum reading.
e. The test-receiver system was set to Peak Detect Function and Specified Bandwidth with Maximum Hold Mode.
f. If the emission level of the EUT in peak mode was 10dB lower than the limit specified, then testing could be stopped and the peak values of the EUT would be reported. Otherwise the emissions that did not have 10dB margin would be re-tested one by one using peak, quasi-peak or average method as specified and then reported in a data sheet.
g. Test the EUT in the lowest channel, the Highest channel

Note:

Both horizontal and vertical antenna polarities were tested
and performed pretest to three orthogonal axis. The worst case emissions were reported

4.3.3 DEVIATION FROM TEST STANDARD

No deviation

4.3.4 TEST SETUP

Radiated Emission Test-Up Frequency Above 1GHz

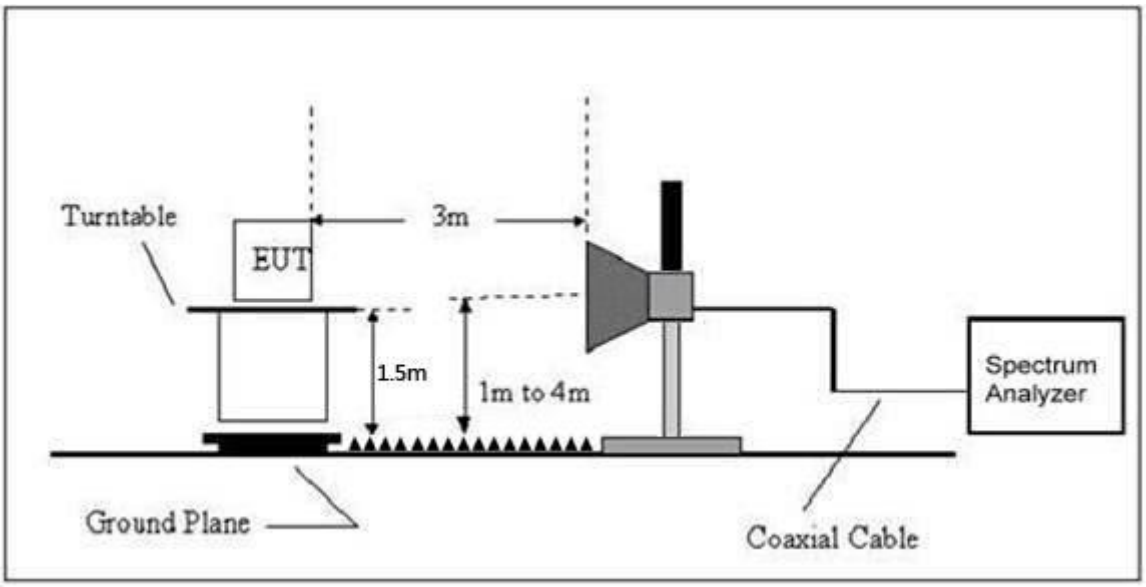


4.3.5 EUT OPERATING CONDITIONS

The EUT tested system was configured as the statements of 2.3 Unless otherwise a special operating condition is specified in the follows during the testing.

4.3.6 TEST RESULT

2420MHz
Peak value:

| Frequency (MHz) | Read Level (dBuV) | Antenna Factor (dB/m) | Cable Loss (dB) | Preamp Factor (dB) | Level (dBuV/m) | Limit Line (dBuV/m) | Over Limit (dB) | Polarization |
|---|---|---|---|---|---|---|---|---|
| 2390 | 55.41 | 21.25 | 3.26 | 33.14 | 46.78 | 74 | -27.22 | Horizontal |
| 2400 | 53.26 | 21.75 | 3.54 | 33.42 | 45.13 | 74 | -28.87 | Horizontal |
| 2390 | 51.24 | 21.25 | 3.26 | 33.14 | 42.61 | 74 | -31.39 | Vertical |
| 2400 | 48.62 | 21.75 | 3.54 | 33.42 | 40.49 | 74 | -33.51 | Vertical |

Average value:

| Frequency (MHz) | Read Level (dBuV) | Antenna Factor (dB/m) | Cable Loss (dB) | Preamp Factor (dB) | Level (dBuV/m) | Limit Line (dBuV/m) | Over Limit (dB) | Polarization |
|---|---|---|---|---|---|---|---|---|
| 2390 | 50.35 | 21.25 | 3.26 | 33.14 | 41.72 | 54 | -12.28 | Horizontal |
| 2400 | 47.62 | 21.75 | 3.54 | 33.42 | 39.49 | 54 | -14.51 | Horizontal |
| 2390 | 44.65 | 21.25 | 3.26 | 33.14 | 36.02 | 54 | -17.98 | Vertical |
| 2400 | 42.35 | 21.75 | 3.54 | 33.42 | 34.22 | 54 | -19.78 | Vertical |

2420MHz
Peak value:

| Frequency (MHz) | Read Level (dBuV) | Antenna Factor (dB/m) | Cable Loss (dB) | Preamp Factor (dB) | Level (dBuV/m) | Limit Line (dBuV/m) | Over Limit (dB) | Polarization |
|---|---|---|---|---|---|---|---|---|
| 2483.5 | 55.64 | 22.12 | 3.65 | 33.54 | 47.87 | 74 | -26.13 | Horizontal |
| 2500 | 53.26 | 22.35 | 3.98 | 33.27 | 46.32 | 74 | -27.68 | Horizontal |
| 2483.5 | 51.23 | 22.12 | 3.65 | 33.54 | 43.46 | 74 | -30.54 | Vertical |
| 2500 | 48.65 | 22.35 | 3.98 | 33.27 | 41.71 | 74 | -32.29 | Vertical |

Average value:

| Frequency (MHz) | Read Level (dBuV) | Antenna Factor (dB/m) | Cable Loss (dB) | Preamp Factor (dB) | Level (dBuV/m) | Limit Line (dBuV/m) | Over Limit (dB) | Polarization |
|---|---|---|---|---|---|---|---|---|
| 2483.5 | 50.26 | 22.12 | 3.65 | 33.54 | 42.49 | 54 | -11.51 | Horizontal |
| 2500 | 48.62 | 22.35 | 3.98 | 33.27 | 41.68 | 54 | -12.32 | Horizontal |
| 2483.5 | 45.62 | 22.12 | 3.65 | 33.54 | 37.85 | 54 | -16.15 | Vertical |
| 2500 | 43.25 | 22.35 | 3.98 | 33.27 | 36.31 | 54 | -17.69 | Vertical |

Remark: Final Level =Receiver Read level + Antenna Factor + Cable Loss – Preamplifier Factor
All of the restriction bands were tested, and only the data of worst case was exhibited.

Measurement data:
Field Strength of The Fundamental Signal

Peak value:

| Frequency (MHz) | Read Level (dBuV) | Antenna Factor (dB/m) | Cable Loss (dB) | Preamp Factor (dB) | Level (dBuV/m) | Limit Line (dBuV/m) | Over Limit (dB) | polarization |
|---|---|---|---|---|---|---|---|---|
| 2420 | 102.19 | 22.55 | 3.25 | 33.45 | 94.54 | 114 | -19.46 | Vertical |
| 2420 | 100.24 | 22.55 | 3.25 | 33.45 | 92.59 | 114 | -21.41 | Horizontal |

**Average value:**

| Frequency (MHz) | Read Level (dBuV) | Antenna Factor (dB/m) | Cable Loss (dB) | Preamp Factor (dB) | Level (dBuV/m) | Limit Line (dBuV/m) | Over Limit (dB) | polarization |
|---|---|---|---|---|---|---|---|---|
| 2420 | 92.41 | 22.55 | 3.25 | 33.45 | 84.76 | 94 | -9.24 | Vertical |
| 2420 | 90.38 | 22.55 | 3.25 | 33.45 | 82.73 | 94 | -11.27 | Horizontal |

*Remark:*

1. *Final Level =Receiver Read level + Antenna Factor + Cable Loss – Preamplifier Factor*

## 4.4 Channel Bandwidth

| | |
|---|---|
| Test Requirement: | FCC Part15 C Section 15.215 |
| Test Method: | ANSI C63.10:2020 |

4.4.1 Applied procedures / limit

| FCC Part15 (15.215) , Subpart C | | | |
|---|---|---|---|
| Section | Test Item | Frequency Range (MHz) | Result |
| 15.215 | Bandwidth | 2400-2483.5 | PASS |

4.4.2 TEST PROCEDURE

1. Set resolution bandwidth (RBW) = 1-5% or DTS BW, not to exceed 100 kHz.
2. Set the video bandwidth (VBW) ⩾ 3 x RBW.
3. Detector = Peak.
4. Trace mode = max hold.
5. Sweep = auto couple.
6. Allow the trace to stabilize.
7. Measure the maximum width of the emission that is constrained by the frequencies associated with the two outermost amplitude points (upper and lower) that are attenuated by 20 dB relative to the maximum level measured in the fundamental emission.

4.4.3 DEVIATION FROM STANDARD

No deviation.

4.4.4 TEST SETUP

4.4.5 EUT OPERATION CONDITIONS

The EUT tested system was configured as the statements of 2.4 Unless otherwise a special operating condition is specified in the follows during the testing.

4.4.6 TEST RESULTS

| | | | |
|---|---|---|---|
| Temperature： | 26℃ | Relative Humidity： | 54% |
| Test Mode ： | GFSK | Test Voltage ： | DC 3.0V |

| Test channel | Channel Bandwidth (MHz) | Result |
|---|---|---|
| 2420MHz | 1.143 | Pass |

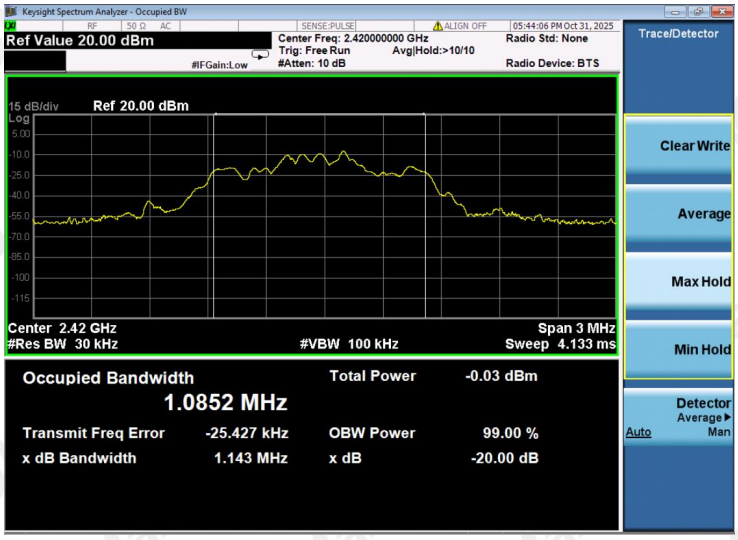


Lowest channel

## 4.5 Antenna Requirement

**Standard Applicable**

**For intentional device, according to FCC 47 CFR Section 15.203:**

An intentional radiator shall be designed to ensure that no antenna other than that furnished by the responsible party shall be used with the device. The use of a permanently attached antenna or of an antenna that uses a unique coupling to the intentional radiator, the manufacturer may design the unit so that a broken antenna can be replaced by the user, but the use of a standard antenna jack or electrical connector is prohibited

**Antenna Connected Construction**

The maximum gain of antenna was -0.68 dBi.

Remark:The antenna gain is provided by the customer, if the data provided by the customer is not accurate, MAXLAB Testing Co.,Ltd. does not assume any responsibility.

# 5 Test Setup Photos of the EUT

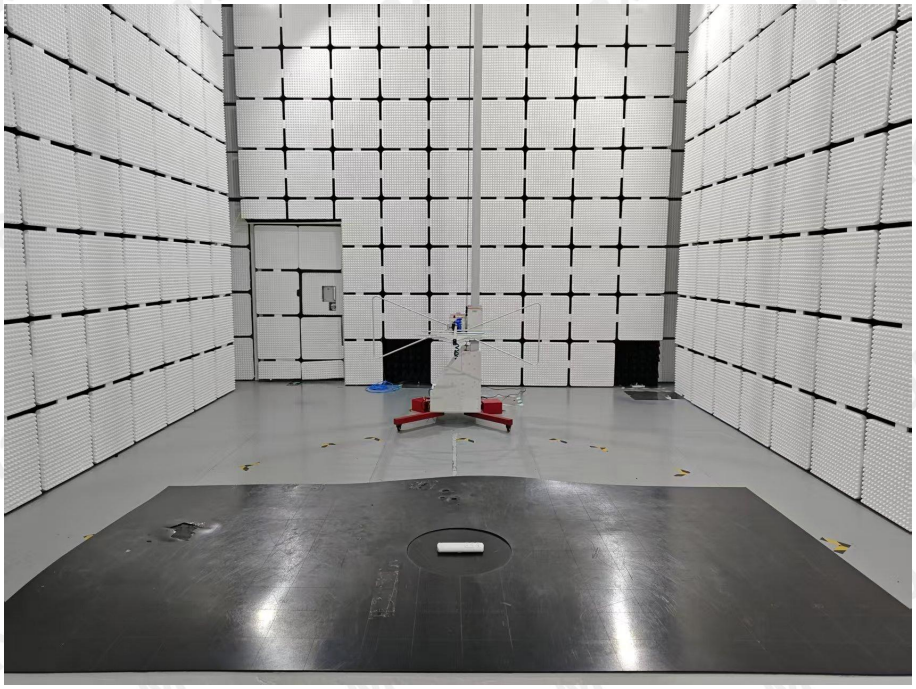

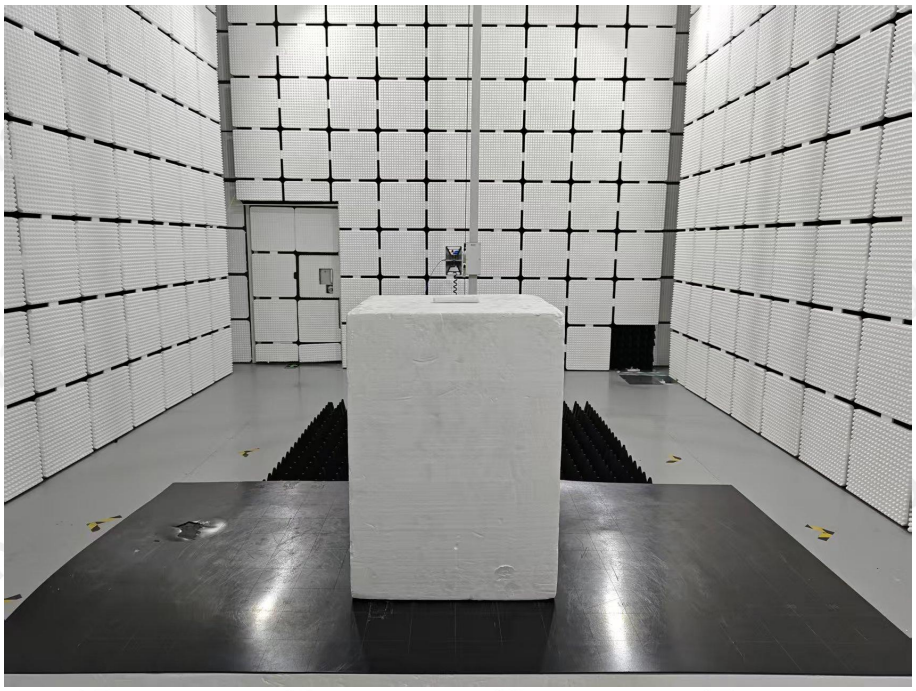

# 6 Photos of the EUT

Reference to the report ANNEX A of external photos and ANNEX B of internal photos.

********** **End of Report** **********