FCC PART 15 SUBPART C TEST REPORT

FCC PART 15.249

Report Reference No.....	**MAX25122914P01-R01**
FCC ID.....	**2BUEL-X6**
Compiled by (position+printed name+signature)..:	Engineer/ Cindy Zheng
Supervised by (position+printed name+signature)..:	Manager/Haley Wen
Approved by (position+printed name+signature)..:	RF Manager/ Vivian Jiang
Date of issue.....:	January 12, 2026

Testing Laboratory Name .....:	**MAXLAB Testing Co.,Ltd.**
Address .....:	1/F, Building B, Xinshidai GR Park,Shiyan Street, Bao'an District, Shenzhen,Guangdong, 518052, People' s Republic of China
Applicant's name.....:	**Huizhou Shiniu Technology Co., LTD**
Address .....:	8th Floor, Building 4, Kejinming Industrial Park, No. 4, Yingshan 2nd Road, Liling Town, Zhongkai High-tech Zone, Huizhou City, Guangdong, China
Test specification .....:	
Standard .....:	**FCC CFR Title 47 Part 15 Subpart C Section 15.249** **ANSI C63.10:2020**

MAXLAB Testing Co.,Ltd.All rights reserved.

This publication may be reproduced in whole or in part for non-commercial purposes as long as the MAXLAB Testing Co.,Ltd. is acknowledged as copyright owner and source of the material. MAXLAB Testing Co.,Ltd. takes no responsibility for and will not assume liability for damages resulting from the reader's interpretation of the reproduced material due to its placement and context.

Equipment description.....:	**Window Cleaning Robot**
Brand Name .....:	N/A
Manufacturer .....:	Huizhou Shiniu Technology Co., LTD
Model/Type reference.....:	X6
Listed Models .....:	X6 PRO, X6 SE, E300, E300L, E260, E200
Modulation .....:	GFSK
Frequency.....	From 2432MHz to 2471MHz
Ratings .....:	DC3.0V(2*1.5V AAA battery)
Result.....:	**PASS**

TEST REPORT

Equipment under Test	:	**Window Cleaning Robot**
Model /Type	:	X6
Listed Models	:	X6 PRO, X6 SE, E300, E300L, E260, E200
Model Declaration	:	All models covered in this report are the same with each other, except for different model No. for trading purpose.
Applicant	:	**Huizhou Shiniu Technology Co., LTD**
Address	:	8th Floor, Building 4, Kejinming Industrial Park, No. 4, Yingshan 2nd Road, Liling Town, Zhongkai High-tech Zone, Huizhou City, Guangdong, China
Manufacturer	:	**Huizhou Shiniu Technology Co., LTD**
Address	:	8th Floor, Building 4, Kejinming Industrial Park, No. 4, Yingshan 2nd Road, Liling Town, Zhongkai High-tech Zone, Huizhou City, Guangdong, China

Test Result:	**PASS**

The test report merely corresponds to the test sample.
It is not permitted to copy extracts of these test result without the written permission of the test laboratory.

Contents

1 TEST STANDARDS 4

2 SUMMARY 5

2.1 General Remarks 5
2.2 Product Description 5
2.3 Equipment Under Test 5
2.4 Short description of the Equipment under Test (EUT) 5
2.5 EUT operation mode 6
2.6 Block Diagram of Test Setup 6
2.7 Related Submittal(s) / Grant (s) 6
2.8 Modifications 6

3 TEST ENVIRONMENT 7

3.1 Address of the test laboratory 7
3.2 Test Facility 7
3.3 Environmental conditions 7
3.4 Summary of measurement results 8
3.5 Statement of the measurement uncertainty 8
3.6 Equipments Used during the Test 9

4 TEST CONDITIONS AND RESULTS..... 11

4.1 AC Power Conducted Emission 11
4.2 Radiated Emissions and Band Edge 12
4.3 Bandwidth of Frequncy Band Edge 15
4.4 Channel Bandwidth 22
4.5 Antenna Requirement 25

5 TEST SETUP PHOTOS OF THE EUT 27

6 PHOTOS OF THE EUT 28

1 TEST STANDARDS

The tests were performed according to following standards:

FCC Rules Part 15.249: Frequency Hopping, Direct Spread Spectrum and Hybrid Systems that are in operation within the bands of 902-928 MHz, 2400-2483.5 MHz, and 5725-5850 MHz and 24.0-24.25 GHz
ANSI C63.10-2020: American National Standard for Testing Unlicensed Wireless Devices

2 SUMMARY

2.1 General Remarks

Date of receipt of test sample	:	December 25, 2025
Testing commenced on	:	December 25, 2025
Testing concluded on	:	January 12, 2026

2.2 Product Description

Product Description:	Window Cleaning Robot
Model/Type reference:	X6
Listed Models:	X6 PRO, X6 SE, E300, E300L, E260, E200
Power supply:	DC3.0V(2*1.5V AAA battery)
Adapter information (Optional accessories)	N/A
Battery:	N/A
Testing sample ID:	MAX25122914P01-R01-1# (Engineer sample), MAX25122914P01-R01-2# (Normal sample)
2.4G	
Supported type:	TX 2.4G
Modulation:	GFSK
Operation frequency:	2432~2471MHz
Channel number:	3
Channel separation:	/
Antenna type:	PCB antenna
Antenna gain:	0dBi

2.3 Equipment Under Test

Power supply system utilised

Power supply voltage	:	○	230V / 50 Hz	○	120V / 60Hz
		○	12 V DC	○	24 V DC
		●	Other (specified in blank below)		

DC 3V

2.4 Short description of the Equipment under Test (EUT)

This is a Window Cleaning Robot.
For more details, refer to the user's manual of the EUT.

2.5 EUT operation mode

The Applicant provides communication tools software(Engineer mode) to control the EUT for staying in continuous transmitting (Duty Cycle more than 98%) and receiving mode for testing.There are 3 channels provided to the EUT and Channel 00/01/02 were selected to test.

Operation Frequency:

Channel	Frequency (MHz)
00	2432
01	2452
02	2471

2.6 Block Diagram of Test Setup

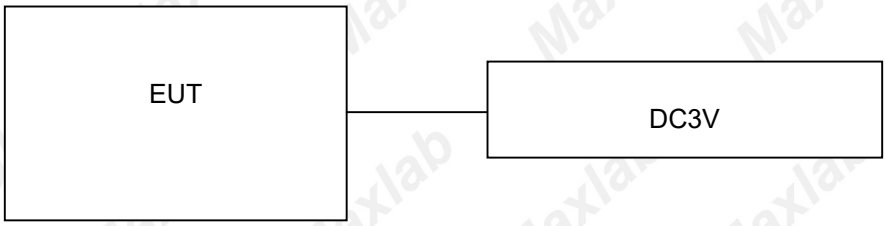

2.7 Related Submittal(s) / Grant (s)

This submittal(s) (test report) is intended for the device filing to comply with Section 15.249 of the FCC Part 15, Subpart C Rules.

2.8 Modifications

No modifications were implemented to meet testing criteria.

3 TEST ENVIRONMENT

3.1 Address of the test laboratory

MAXLAB Testing Co.,Ltd.
1/F, Building B, Xinshidai GR Park,Shiyan Street, Bao'an District, Shenzhen,Guangdong, 518052, People's Republic of China

3.2 Test Facility

FCC-Registration No.: 562200 Designation Number: CN1338
MAXLAB Testing Co.,Ltd. has been listed on the US Federal Communications Commission list of test facilities recognized to perform electromagnetic emissions measurements.

Industry Canada Registration Number. Is: 11093A CAB identifier: CN0019
The Laboratory has been registered by Certification and Engineering Bureau of Industry Canada for radio equipment testing.

A2LA-Lab Cert. No.: 4707.01
MAXLAB Testing Co.,Ltd. has been listed by American Association for Laboratory Accreditation to perform electromagnetic emission measurement.

The 3m-Semi anechoic test site fulfils CISPR 16-1-4 according to ANSI C63.10 and CISPR 16-1-4:2010.

3.3 Environmental conditions

During the measurement the environmental conditions were within the listed ranges:
Radiated Emission:

Temperature:	23 ° C
Humidity:	44 %
Atmospheric pressure:	950-1050mbar

AC Main Conducted testing：

Temperature:	24 ° C
Humidity:	47 %
Atmospheric pressure:	950-1050mbar

Conducted testing：

Temperature:	24 ° C
Humidity:	46 %
Atmospheric pressure:	950-1050mbar

3.4 Summary of measurement results

FCC Part15 (15.249) , Subpart C			
Standard Section	Test Item	Judgment	Remark
FCC part 15.203	Antenna requirement	PASS	
FCC part 15.207	AC Power Line Conducted Emission	N/A	
FCC part 15.249	Fundamental &Radiated Spurious Emission Measurement	PASS	
FCC part 15.215	20dB Channel Bandwidth	PASS	
FCC part 15.205	Band Edge	PASS	

Remark:
1. The measurement uncertainty is not included in the test result.
2. We tested all test mode and recorded worst case in report
3. " N/A" denotes test is not applicable in this Test Report

3.5 Statement of the measurement uncertainty

The data and results referenced in this document are true and accurate. The reader is cautioned that there may be errors within the calibration limits of the equipment and facilities. The measurement uncertainty was calculated for all measurements listed in this test report acc. to TR-100028-01" Electromagnetic compatibility and Radio spectrum Matters (ERM);Uncertainties in the measurement of mobile radio equipment characteristics; Part 1" and TR-100028-02 "Electromagnetic compatibility and Radio spectrum Matters (ERM);Uncertainties in the measurement of mobile radio equipment characteristics; Part 2 " and is documented in the MAXLAB Testing Co.,Ltd.quality system acc. to DIN EN ISO/IEC 17025. Furthermore, component and process variability of devices similar to that tested may result in additional deviation. The manufacturer has the sole responsibility of continued compliance of the device.

Hereafter the best measurement capability for MAXLAB Testing Co.,Ltd.:

Test	Range	Measurement Uncertainty	Notes
Radiated Emission	9KHz~30MHz	3.82 dB	(1)
Radiated Emission	30~1000MHz	4.06 dB	(1)
Radiated Emission	1~18GHz	5.14 dB	(1)
Radiated Emission	18-40GHz	5.38 dB	(1)
Conducted Disturbance	0.15~30MHz	2.14 dB	(1)
Transmitter power conducted	1~40GHz	0.57 dB	(1)
Conducted spurious emission	1~40GHz	1.60 dB	(1)
OBW	1~40GHz	25 Hz	(1)

(1) This uncertainty represents an expanded uncertainty expressed at approximately the 95% confidence level using a coverage factor of k=2.

3.6 Equipments Used during the Test

Conducted Emission					
Test Equipment	**Manufacturer**	**Model**	**Serial No.**	**Date of Cal.**	**Due Date**
Shielding Room	ZhongYu Electron	7.3(L)x3.1(W)x2.9(H)	MAX252	2025-10-27	2026-10-26
EMI Test Receiver	R&S	ESCI 7	MAX552	2025-10-27	2026-10-26
Coaxial Switch	ANRITSU CORP	MP59B	MAX225	2025-10-27	2026-10-26
ENV216 2-L-V-NETZNACHB.DE	ROHDE&SCHWARZ	ENV216	MAX226	2025-10-27	2026-10-26
Coaxial Cable	MAX	N/A	MAX227	N/A	N/A
EMI Test Software	AUDIX	E3	N/A	N/A	N/A
Thermo meter	KTJ	TA328	MAX233	2025-10-27	2026-10-26
Absorbing clamp	Elektronik-Feinmechanik	MDS21	MAX229	2025-10-27	2026-10-26
LISN	R&S	ENV216	308	2025-10-27	2026-10-26
LISN	R&S	ENV216	314	2025-10-27	2026-10-26
Radiation Test equipment					
Test Equipment	**Manufacturer**	**Model**	**Serial No.**	**Date of Cal.**	**Due Date**
3m Semi- Anechoic Chamber	ZhongYu Electron	9.2(L)*6.2(W)* 6.4(H)	MAX250	2025-10-27	2026-10-26
Control Room	ZhongYu Electron	6.2(L)*2.5(W)* 2.4(H)	MAX251	N/A	N/A
EMI Test Receiver	Rohde & Schwarz	ESU26	MAX203	2025-10-27	2026-10-26
BiConiLog Antenna	SCHWARZBECK MESS-ELEKTRONIK	VULB9163	MAX214	2025-10-27	2026-10-26
Double -ridged waveguide horn	SCHWARZBECK MESS-ELEKTRONIK	BBHA 9120 D	MAX208	2025-10-27	2026-10-26
Horn Antenna	ETS-LINDGREN	3160	MAX217	2025-10-27	2026-10-26
EMI Test Software	AUDIX	E3	N/A	N/A	N/A
Coaxial Cable	MAX	N/A	MAX213	2025-10-27	2026-10-26
Coaxial Cable	MAX	N/A	MAX211	2025-10-27	2026-10-26
Coaxial cable	MAX	N/A	MAX210	2025-10-27	2026-10-26
Coaxial Cable	MAX	N/A	MAX212	2025-10-27	2026-10-26
Amplifier(100kHz-3GHz)	HP	8347A	MAX204	2025-10-27	2026-10-26
Amplifier(2GHz-20GHz)	HP	84722A	MAX206	2025-10-27	2026-10-26
Amplifier (18-26GHz)	Rohde & Schwarz	AFS33-18002 650-30-8P-44	MAX218	2025-10-27	2026-10-26
Band filter	Amindeon	82346	MAX219	2025-10-27	2026-10-26
Power Meter	Anritsu	ML2495A	MAX540	2025-10-27	2026-10-26
Power Sensor	Anritsu	MA2411B	MAX541	2025-10-27	2026-10-26
Wideband Radio Communication Tester	Rohde & Schwarz	CMW500	MAX575	2025-10-27	2026-10-26

Splitter	Agilent	11636B	MAX237	2025-10-27	2026-10-26
Loop Antenna	ZHINAN	ZN30900A	MAX534	2025-10-27	2026-10-26
Breitband hornantenne	SCHWARZBECK	BBHA 9170	MAX579	2025-10-27	2026-10-26
Amplifier	TDK	PA-02-02	MAX574	2025-10-27	2026-10-26
Amplifier	TDK	PA-02-03	MAX576	2025-10-27	2026-10-26
PSA Series Spectrum Analyzer	Rohde & Schwarz	FSP	MAX578	2025-10-27	2026-10-26

RF Conducted Test:

Test Equipment	Manufacturer	Model	Serial No.	Date of Cal.	Due Date
MXA Signal Analyzer	Agilent	N9020A	MAX566	2025-10-27	2026-10-26
EMI Test Receiver	R&S	ESCI 7	MAX552	2025-10-27	2026-10-26
Spectrum Analyzer	Agilent	E4440A	MAX533	2025-10-27	2026-10-26
MXG vector Signal Generator	Agilent	N5182A	MAX567	2025-10-27	2026-10-26
ESG Analog Signal Generator	Agilent	E4428C	MAX568	2025-10-27	2026-10-26
USB RF Power Sensor	DARE	RPR3006W	MAX569	2025-10-27	2026-10-26
RF Switch Box	Shongyi	RFSW3003328	MAX571	2025-10-27	2026-10-26
Programmable Constant Temp & Humi Test Chamber	WEWON	WHTH-150L-40-880	MAX572	2025-10-27	2026-10-26

4 TEST CONDITIONS AND RESULTS

4.1 AC Power Conducted Emission

TEST CONFIGURATION

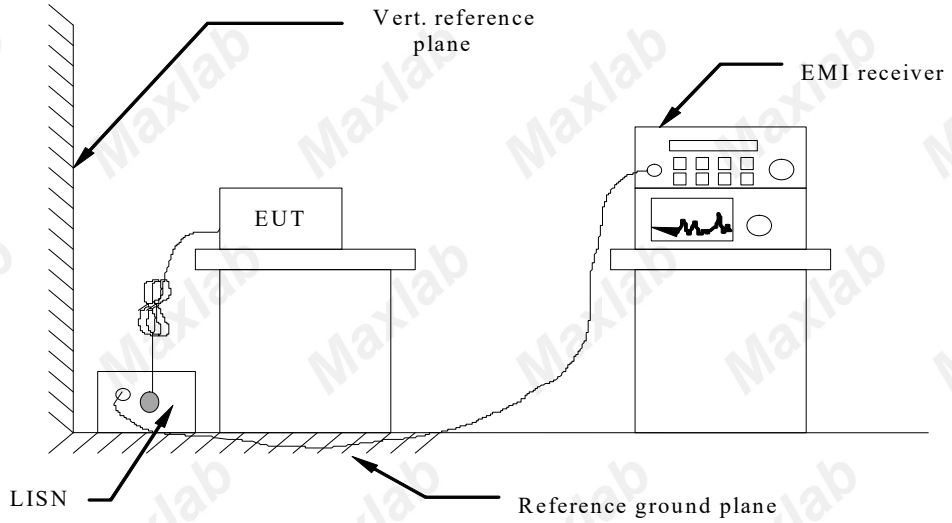

TEST PROCEDURE

1 The equipment was set up as per the test configuration to simulate typical actual usage per the user's manual. The EUT is a tabletop system, a wooden table with a height of 0.8 meters is used and is placed on the ground plane as per ANSI C63.10-2020.
2 Support equipment, if needed, was placed as per ANSI C63.10-2020
3 All I/O cables were positioned to simulate typical actual usage as per ANSI C63.10-2020
4 The EUT received power from adapter, the adapter received AC120V/60Hz and AC 240V/60Hz power through a Line Impedance Stabilization Network (LISN) which supplied power source and was grounded to the ground plane.
5 All support equipments received AC power from a second LISN, if any.
6 The EUT test program was started. Emissions were measured on each current carrying line of the EUT using a spectrum Analyzer / Receiver connected to the LISN powering the EUT.The LISN has two monitoring points: Line 1 (Hot Side) and Line 2 (Neutral Side). Two scans were taken: one with Line 1 connected to Analyzer / Receiver and Line 2 connected to a 50 ohm load; the second scan had Line 1 connected to a 50 ohm load and Line 2 connected to the Analyzer / Receiver.
7 Analyzer / Receiver scanned from 150 KHz to 30MHz for emissions in each of the test modes.
8 During the above scans, the emissions were maximized by cable manipulation.

AC Power Conducted Emission Limit

For intentional device, according to § 15.207(a) AC Power Conducted Emission Limits is as following :

Frequency range (MHz)	Limit (dBuV)	
	Quasi-peak	Average
0.15-0.5	66 to 56*	56 to 46*
0.5-5	56	46
5-30	60	50
* Decreases with the logarithm of the frequency.		

TEST RESULTS
N/A, The EUT is powered by the DC only,the test item is not applicable.

4.2 Radiated Emissions and Band Edge

TEST CONFIGURATION

Frequency range 9 KHz – 30MHz

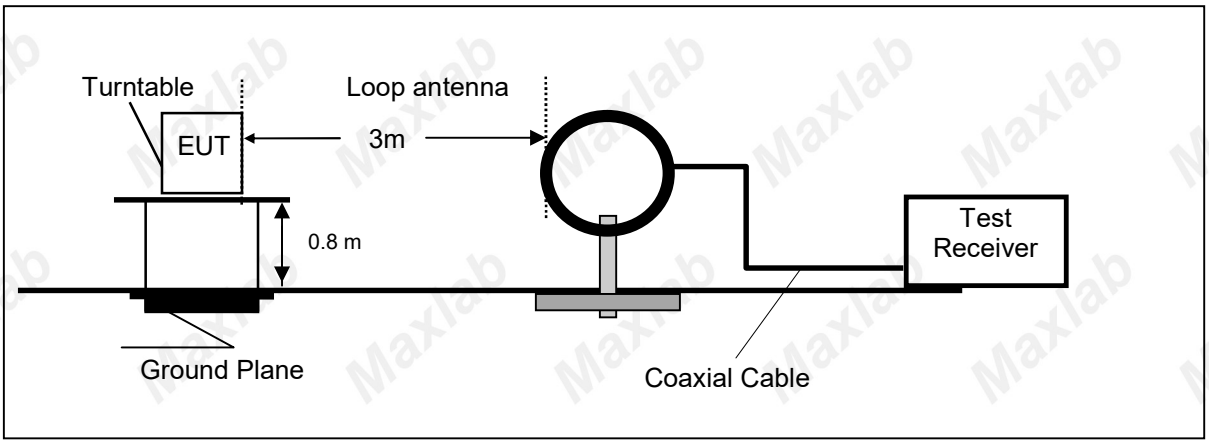

Frequency range 30MHz – 1000MHz

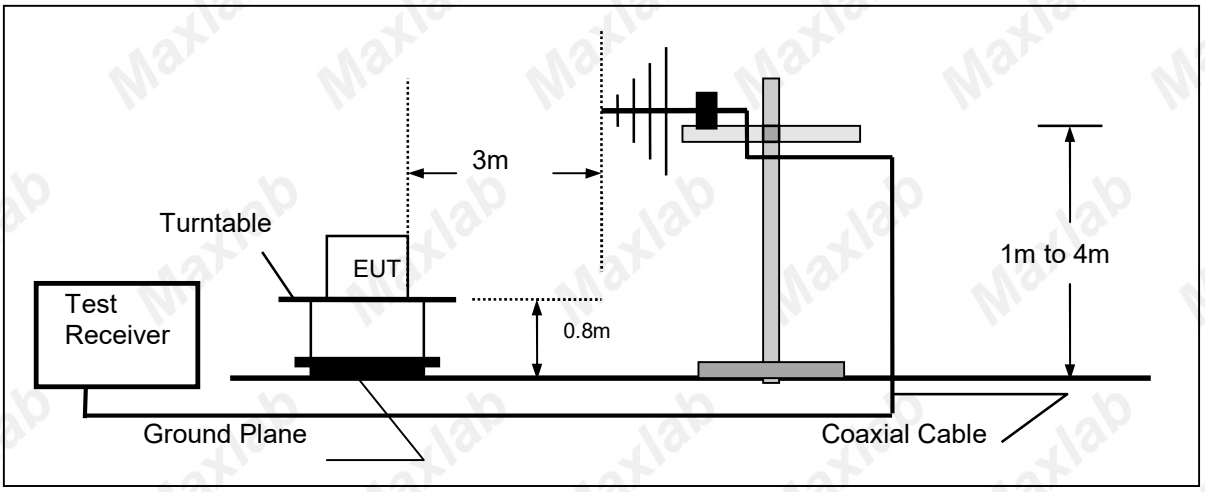

Frequency range above 1GHz-25GHz

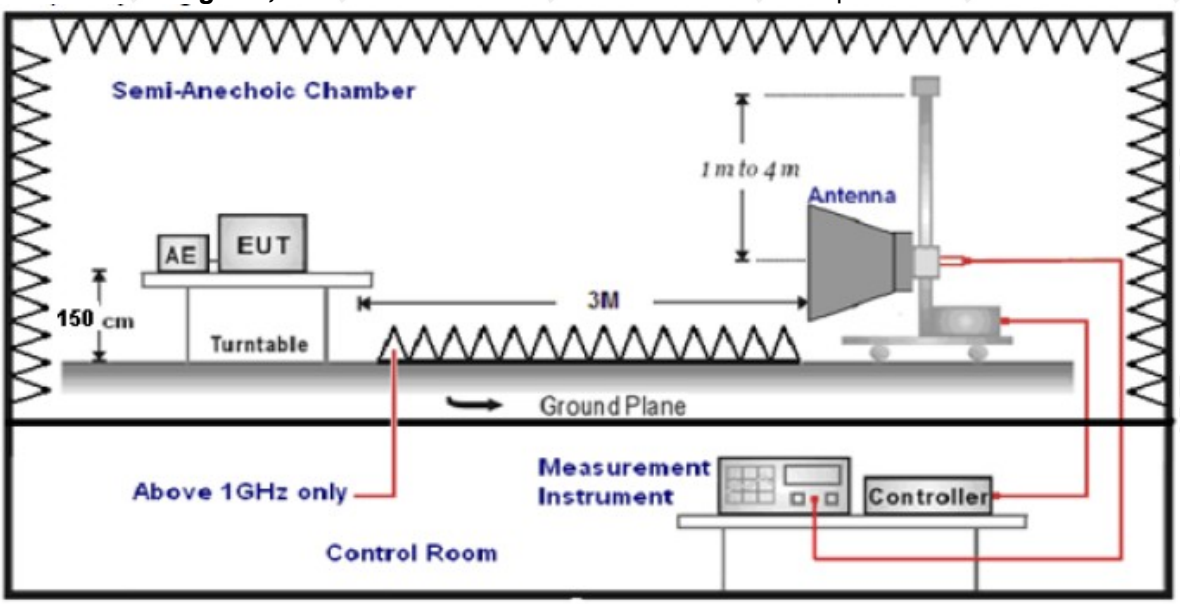

TEST PROCEDURE

1. The EUT was placed on a turn table which is 0.8m above ground plane when testing frequency range 9 KHz –1GHz;the EUT was placed on a turn table which is 1.5m above ground plane when testing frequency range 1GHz – 25GHz.
2. Maximum procedure was performed by raising the receiving antenna from 1m to 4m and rotating the turn table from 0℃ to 360℃ to acquire the highest emissions from EUT.
3. And also, each emission was to be maximized by changing the polarization of receiving antenna both horizontal and vertical.
4. Repeat above procedures until all frequency measurements have been completed.
5. The EUT minimum operation frequency was 32.768KHz and maximum operation frequency was 2480MHz.so radiated emission test frequency band from 9KHz to 25GHz.
6. The distance between test antenna and EUT as following table states:

Test Frequency range	Test Antenna Type	Test Distance
9KHz-30MHz	Active Loop Antenna	3
30MHz-1GHz	Ultra-Broadband Antenna	3
1GHz-18GHz	Double Ridged Horn Antenna	3
18GHz-25GHz	Horn Anternna	1

7. Setting test receiver/spectrum as following table states:

Test Frequency range	Test Receiver/Spectrum Setting	Detector
9KHz-150KHz	RBW=200Hz/VBW=3KHz,Sweep time=Auto	QP
150KHz-30MHz	RBW=9KHz/VBW=100KHz,Sweep time=Auto	QP
30MHz-1GHz	RBW=120KHz/VBW=1000KHz,Sweep time=Auto	QP
1GHz-40GHz	Peak Value: RBW=1MHz/VBW=3MHz, Sweep time=Auto Average Value: RBW=1MHz/VBW=10Hz, Sweep time=Auto	Peak

Field Strength Calculation

The field strength is calculated by adding the Antenna Factor and Cable Factor and subtracting the Amplifier Gain and Duty Cycle Correction Factor(if any) from the measured reading. The basic equation with a sample calculation is as follows:

FS = RA + AF + CL - AG

Where FS = Field Strength	CL = Cable Attenuation Factor (Cable Loss)
RA = Reading Amplitude	AG = Amplifier Gain
AF = Antenna Factor	

Transd=AF +CL-AG

RADIATION LIMIT

For intentional device, according to § 15.209(a), the general requirement of field strength of radiated emission from intentional radiators at a distance of 3 meters shall not exceed the following table. According to § 15.247(d), in any 100kHz bandwidth outside the frequency band in which the EUT is operating, the radio frequency power that is produced by the intentional radiator shall be at least 20dB below that in the100kHz bandwidth within the band that contains the highest level of desired power.

The pre-test have done for the EUT in three axes and found the worst emission at position shown in test setup photos.

Frequency (MHz)	Distance (Meters)	Radiated (dBμV/m)	Radiated (μV/m)
0.009-0.49	3	20log(2400/F(KHz))+40log(300/3)	2400/F(KHz)
0.49-1.705	3	20log(24000/F(KHz))+ 40log(30/3)	24000/F(KHz)
1.705-30	3	20log(30)+ 40log(30/3)	30
30-88	3	40.0	100
88-216	3	43.5	150
216-960	3	46.0	200
Above 960	3	54.0	500

TEST RESULTS

Remark:

1. This test was performed with EUT in X, Y, Z position and the worse case was found when EUT in X position.
2. 2.4G were tested at Low, Middle, and High channel and recorded worst mode at TX GFSK 2402MHz.
3. Radiated emission test from 9 KHz to 10th harmonic of fundamental was verified, and no emission found except system noise floor in 9 KHz to 30MHz and not recorded in this report.

For 30MHz-1GHz

Horizontal

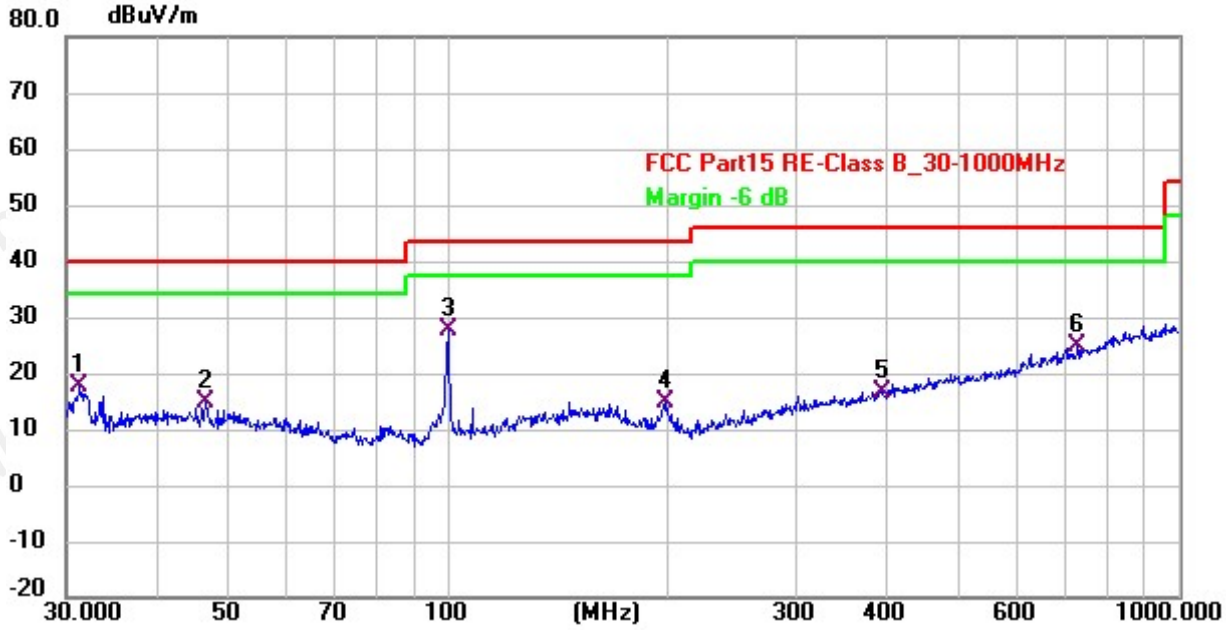

No.	Frequency (MHz)	Reading (dBuV)	Factor (dB/m)	Level (dBuV/m)	Limit (dBuV/m)	Margin (dB)	Detector
1	31.289	32.21	-14.60	17.61	40.00	-22.39	QP
2	46.503	28.96	-14.07	14.89	40.00	-25.11	QP
3 *	99.878	45.04	-17.46	27.58	43.50	-15.92	QP
4	197.893	31.20	-16.34	14.86	43.50	-28.64	QP
5	393.472	26.58	-9.81	16.77	46.00	-29.23	QP
6	726.805	27.56	-2.72	24.84	46.00	-21.16	QP

Note:1).Level (dBμV/m)= Reading (dBμV)+ Factor (dB/m)
2). Factor(dB/m)=Antenna Factor (dB/m) + Cable loss (dB) - Pre Amplifier gain (dB)
3). Margin(dB) = Limit (dBμV/m) - Level (dBμV/m)

Vertical

No.	Frequency (MHz)	Reading (dBuV)	Factor (dB/m)	Level (dBuV/m)	Limit (dBuV/m)	Margin (dB)	Detector
1	31.289	30.97	-14.60	16.37	40.00	-23.63	QP
2	50.764	26.70	-14.20	12.50	40.00	-27.50	QP
3	99.878	42.60	-17.46	25.14	43.50	-18.36	QP
4 *	199.986	42.05	-16.14	25.91	43.50	-17.59	QP
5	404.667	29.22	-9.40	19.82	46.00	-26.18	QP
6	640.611	27.93	-4.58	23.35	46.00	-22.65	QP

Note:1).Level (dBμV/m)= Reading (dBμV)+ Factor (dB/m)
2). Factor(dB/m)=Antenna Factor (dB/m) + Cable loss (dB) - Pre Amplifier gain (dB)
3). Margin(dB) = Limit (dBμV/m) - Level (dBμV/m)

For 1GHz to 25GHz

Note: GFSK, π/4 DQPSK and 8-DPSK all have been tested, only worse case GFSK is reported.

GFSK (above 1GHz)

Frequency(MHz):			2432		Polarity:		HORIZONTAL		
Frequency (MHz)	Emission Level (dBuV/m)		Limit (dBuV/m)	Margin (dB)	Raw Value (dBuV)	Antenna Factor (dB/m)	Cable Factor (dB)	Pre-amplifier (dB)	Correction Factor (dB/m)
4864.00	57.48	PK	74	16.52	61.84	32.40	5.11	41.87	-4.36
4864.00	46.24	AV	54	7.76	50.60	32.40	5.11	41.87	-4.36
7296.00	54.90	PK	74	19.10	55.53	36.58	6.43	43.64	-0.63
7296.00	45.16	AV	54	8.84	45.79	36.58	6.43	43.64	-0.63

Frequency(MHz):			2432		Polarity:		VERTICAL		
Frequency (MHz)	Emission Level (dBuV/m)		Limit (dBuV/m)	Margin (dB)	Raw Value (dBuV)	Antenna Factor (dB/m)	Cable Factor (dB)	Pre-amplifier (dB)	Correction Factor (dB/m)
4864.00	56.19	PK	74	17.81	60.55	32.40	5.11	41.87	-4.36
4864.00	48.36	AV	54	5.64	52.72	32.40	5.11	41.87	-4.36
7296.00	55.01	PK	74	18.99	55.64	36.58	6.43	43.64	-0.63
7296.00	46.18	AV	54	7.82	46.81	36.58	6.43	43.64	-0.63

Frequency(MHz):			2452		Polarity:		HORIZONTAL		
Frequency (MHz)	Emission Level (dBuV/m)		Limit (dBuV/m)	Margin (dB)	Raw Value (dBuV)	Antenna Factor (dB/m)	Cable Factor (dB)	Pre-amplifier (dB)	Correction Factor (dB/m)
4904.00	54.89	PK	74	19.46	58.49	32.56	5.34	41.85	-3.95
4904.00	47.01	AV	54	7.56	50.39	32.56	5.34	41.85	-3.95
7356.00	53.26	PK	74	21.08	53.28	36.54	6.81	43.71	-0.36
7356.00	45.35	AV	54	9.32	45.04	36.54	6.81	43.71	-0.36

Frequency(MHz):			2452		Polarity:		VERTICAL		
Frequency (MHz)	Emission Level (dBuV/m)		Limit (dBuV/m)	Margin (dB)	Raw Value (dBuV)	Antenna Factor (dB/m)	Cable Factor (dB)	Pre-amplifier (dB)	Correction Factor (dB/m)
4902.00	54.89	PK	74	19.11	60.41	32.56	5.34	41.85	-3.95
4902.00	47.01	AV	54	6.99	49.79	32.56	5.34	41.85	-3.95
7356.00	53.26	PK	74	20.74	53.92	36.54	6.81	43.71	-0.36
7356.00	45.35	AV	54	8.65	44.31	36.54	6.81	43.71	-0.36

Frequency(MHz):			2471		Polarity:		HORIZONTAL		
Frequency (MHz)	Emission Level (dBuV/m)		Limit (dBuV/m)	Margin (dB)	Raw Value (dBuV)	Antenna Factor (dB/m)	Cable Factor (dB)	Pre-amplifier (dB)	Correction Factor (dB/m)
4942.00	58.62	PK	74	15.38	62.08	32.73	5.64	41.83	-3.46
4942.00	49.02	AV	54	4.98	52.48	32.73	5.64	41.83	-3.46
7413.00	55.53	PK	74	18.47	55.59	36.50	7.23	43.79	-0.06
7413.00	45.56	AV	54	8.44	45.62	36.50	7.23	43.79	-0.06
Frequency(MHz):			**2471**		**Polarity:**		**VERTICAL**		
Frequency (MHz)	Emission Level (dBuV/m)		Limit (dBuV/m)	Margin (dB)	Raw Value (dBuV)	Antenna Factor (dB/m)	Cable Factor (dB)	Pre-amplifier (dB)	Correction Factor (dB/m)
4942.00	58.16	PK	74	15.84	61.62	32.73	5.64	41.83	-3.46
4942.00	47.62	AV	54	6.38	51.08	32.73	5.64	41.83	-3.46
7413.00	56.35	PK	74	17.65	56.41	36.50	7.23	43.79	-0.06
7413.00	45.87	AV	54	8.13	45.93	36.50	7.23	43.79	-0.06

REMARKS:

1. Emission level (dBuV/m) =Raw Value (dBuV)+Correction Factor (dB/m)
2. Correction Factor (dB/m) = Antenna Factor (dB/m)+Cable Factor (dB)- Pre-amplifier
3. Margin value = Limit value- Emission level.
4. -- Mean the PK detector measured value is below average limit.
5. The other emission levels were very low against the limit.

4.3 BANDWIDTH OF FREQUENCY BAND EDGE

4.3.1 Test Requirement:

<table>
<tr><td>Test Requirement:</td><td>FCC Part15 C Section 15.209 and 15.205</td></tr>
<tr><td>Test Method:</td><td>ANSI C63.10: 2020</td></tr>
<tr><td>Test Frequency Range:</td><td>All of the restrict bands were tested, only the worst band's (2310MHz to 2500MHz) data was showed.</td></tr>
<tr><td>Test site:</td><td>Measurement Distance: 3m</td></tr>
<tr><td>Receiver setup:</td><td>
<table>
<tr><td>Frequency</td><td>Detector</td><td>RBW</td><td>VBW</td><td>Value</td></tr>
<tr><td rowspan="2">Above 1GHz</td><td>Peak</td><td>1MHz</td><td>3MHz</td><td>Peak</td></tr>
<tr><td>Average</td><td>1MHz</td><td>3MHz</td><td>Average</td></tr>
</table>
</td></tr>
</table>

Emissions radiated outside of the specified frequency bands, except for harmonics, shall be attenuated by at least 50 dB below the level of the fundamental or to the general radiated emission limits in § 15.209, whichever is the lesser attenuation

4.3.2 TEST PROCEDURE

Above 1GHz test procedure as below:

a. 1. The EUT was placed on the top of a rotating table 1.5 meters above the ground at a 3 meter camber. The table was rotated 360 degrees to determine the position of the highest radiation.
b. The EUT was set 3 meters away from the interference-receiving antenna, which was mounted on the top of a variable-height antenna tower.
c. The antenna height is varied from one meter to four meters above the ground to determine the maximum value of the field strength. Both horizontal and vertical polarizations of the antenna are set to make the measurement.
d. For each suspected emission, the EUT was arranged to its worst case and then the antenna was tuned to heights from 1 meter to 4 meters and the rota table was turned from 0 degrees to 360 degrees to find the maximum reading.
e. The test-receiver system was set to Peak Detect Function and Specified Bandwidth with Maximum Hold Mode.
f. If the emission level of the EUT in peak mode was 10dB lower than the limit specified, then testing could be stopped and the peak values of the EUT would be reported. Otherwise the emissions that did not have 10dB margin would be re-tested one by one using peak, quasi-peak or average method as specified and then reported in a data sheet.
g. Test the EUT in the lowest channel, the Highest channel

Note:

Both horizontal and vertical antenna polarities were tested
and performed pretest to three orthogonal axis. The worst case emissions were reported

4.3.3 DEVIATION FROM TEST STANDARD

No deviation

4.3.4 TEST SETUP

Radiated Emission Test-Up Frequency Above 1GHz

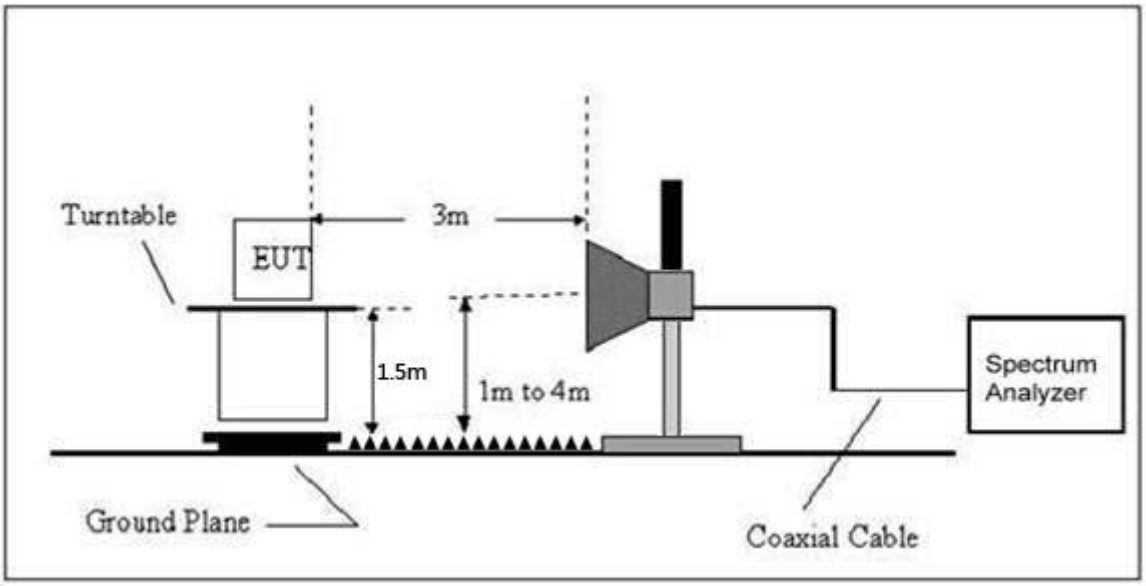

4.3.5 EUT OPERATING CONDITIONS

The EUT tested system was configured as the statements of 2.3 Unless otherwise a special operating condition is specified in the follows during the testing.

4.3.6 TEST RESULT

Results of Band Edges Test (Radiated)

Note: GFSK, Pi/4 DQPSK and 8-DPSK all have been tested, only worse case GFSK is reported.

GFSK

Test Frequency(MHz):			**Lowest channel**		**Polarity:**		**HORIZONTAL**		
Frequency (MHz)	Emission Level (dBuV/m)		Limit (dBuV/m)	Margin (dB)	Raw Value (dBuV)	Antenna Factor (dB/m)	Cable Factor (dB)	Pre-amplifier (dB)	Correction Factor (dB/m)
2310.00	50.32	PK	74	23.68	60.74	27.42	4.31	42.15	-10.42
2310.00	41.14	AV	54	12.86	51.56	27.42	4.31	42.15	-10.42
2390.00	48.98	PK	74	25.02	59.27	27.55	4.35	42.19	-10.29
2390.00	39.38	AV	54	14.62	49.67	27.55	4.35	42.19	-10.29
2400.00	45.17	PK	74	28.83	55.36	27.70	4.39	42.28	-10.19
2400.00	36.92	AV	54	17.08	47.11	27.70	4.39	42.28	-10.19

Test Frequency(MHz):			**Lowest channel**		**Polarity:**		**VERTICAL**		
Frequency (MHz)	Emission Level (dBuV/m)		Limit (dBuV/m)	Margin (dB)	Raw Value (dBuV)	Antenna Factor (dB/m)	Cable Factor (dB)	Pre-amplifier (dB)	Correction Factor (dB/m)
2310.00	49.10	PK	74	24.90	59.52	27.42	4.31	42.15	-10.42
2310.00	39.08	AV	54	14.92	49.50	27.42	4.31	42.15	-10.42
2390.00	47.49	PK	74	26.51	57.78	27.55	4.35	42.19	-10.29
2390.00	36.94	AV	54	17.06	47.23	27.55	4.35	42.19	-10.29
2400.00	44.21	PK	74	29.79	54.40	27.70	4.39	42.28	-10.19
2400.00	34.93	AV	54	19.07	45.12	27.70	4.39	42.28	-10.19

Test Frequency(MHz):			**Highest channel**		**Polarity:**		**HORIZONTAL**		
Frequency (MHz)	Emission Level (dBuV/m)		Limit (dBuV/m)	Margin (dB)	Raw Value (dBuV)	Antenna Factor (dB/m)	Cable Factor (dB)	Pre-amplifier (dB)	Correction Factor (dB/m)
2483.50	44.93	PK	74	29.07	55.56	27.55	4.38	42.56	-10.63
2483.50	34.05	AV	54	19.95	44.68	27.55	4.38	42.56	-10.63
2500.00	43.15	PK	74	30.85	53.88	27.69	4.46	42.88	-10.73
2500.00	31.48	AV	54	22.52	42.21	27.69	4.46	42.88	-10.73

Test Frequency(MHz):			**Highest channel**		**Polarity:**		**VERTICAL**		
Frequency (MHz)	Emission Level (dBuV/m)		Limit (dBuV/m)	Margin (dB)	Raw Value (dBuV)	Antenna Factor (dB/m)	Cable Factor (dB)	Pre-amplifier (dB)	Correction Factor (dB/m)
2483.50	39.63	PK	74	34.37	50.26	27.55	4.38	42.56	-10.63
2483.50	31.19	AV	54	22.81	41.82	27.55	4.38	42.56	-10.63
2500.00	35.28	PK	74	38.72	46.01	27.69	4.46	42.88	-10.73
2500.00	27.46	AV	54	26.54	38.19	27.69	4.46	42.88	-10.73

REMARKS:

1. Emission level (dBuV/m) =Raw Value (dBuV)+Correction Factor (dB/m)
2. Correction Factor (dB/m) = Antenna Factor (dB/m)+Cable Factor (dB)- Pre-amplifier
3. Margin value = Limit value- Emission level.
4. -- Mean the PK detector measured value is below average limit.

The other emission levels were very low against the limit.

Measurement data:

Field Strength of The Fundamental Signal

Peak value:

Frequency (MHz)	Read Level (dBuV)	Antenna Factor (dB/m)	Cable Loss (dB)	Preamp Factor (dB)	Level (dBuV/m)	Limit Line (dBuV/m)	Over Limit (dB)	polarization
2432	107.34	22.55	3.25	33.45	99.69	114.00	-14.31	Vertical
2432	103.65	22.55	3.25	33.45	96.00	114.00	-18.00	Horizontal
2452	102.13	23.05	3.36	33.15	95.39	114.00	-18.61	Vertical
2452	99.08	23.05	3.36	33.15	92.34	114.00	-21.66	Horizontal
2471	98.57	23.57	3.67	33.68	92.13	114.00	-21.87	Vertical
2471	94.72	23.57	3.67	33.68	88.28	114.00	-25.72	Horizontal

Average value:

Frequency (MHz)	Read Level (dBuV)	Antenna Factor (dB/m)	Cable Loss (dB)	Preamp Factor (dB)	Level (dBuV/m)	Limit Line (dBuV/m)	Over Limit (dB)	polarization
2432	96.05	22.55	3.25	33.45	88.40	94.00	-5.60	Vertical
2432	92.61	22.55	3.25	33.45	84.96	94.00	-9.04	Horizontal
2452	89.92	23.05	3.36	33.15	83.18	94.00	-10.82	Vertical
2452	86.93	23.05	3.36	33.15	80.19	94.00	-13.81	Horizontal
2471	86.23	23.57	3.67	33.68	79.79	94.00	-14.21	Vertical
2471	83.19	23.57	3.67	33.68	76.75	94.00	-17.25	Horizontal

Remark:

1. *Final Level =Receiver Read level + Antenna Factor + Cable Loss – Preamplifier Factor*

4.4 Channel Bandwidth

Test Requirement:	FCC Part15 C Section 15.215
Test Method:	ANSI C63.10: 2020

4.4.1 Applied procedures / limit

FCC Part15 (15.215) , Subpart C			
Section	Test Item	Frequency Range (MHz)	Result
15.215	Bandwidth	2400-2483.5	PASS

4.4.2 1TEST PROCEDURE

1. Set resolution bandwidth (RBW) = 1-5% or DTS BW, not to exceed 100 kHz.
2. Set the video bandwidth (VBW) ⩾ 3 x RBW.
3. Detector = Peak.
4. Trace mode = max hold.
5. Sweep = auto couple.
6. Allow the trace to stabilize.
7. Measure the maximum width of the emission that is constrained by the frequencies associated with the two outermost amplitude points (upper and lower) that are attenuated by 20 dB relative to the maximum level measured in the fundamental emission.

4.4.3 2DEVIATION FROM STANDARD

No deviation.

4.4.4 3TEST SETUP

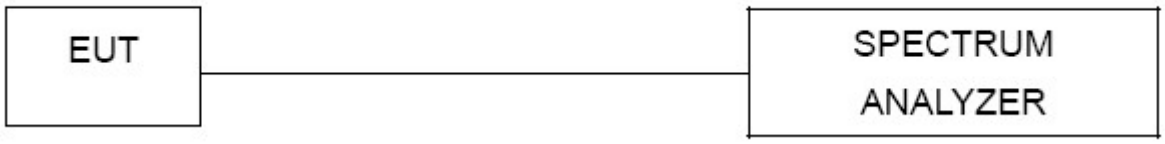

4.4.5 4EUT OPERATION CONDITIONS

The EUT tested system was configured as the statements of 2.4 Unless otherwise a special operating condition is specified in the follows during the testing.

4.4.6 5TEST RESULTS

Temperature:	26℃	Relative Humidity:	54%
Test Mode :	GFSK	Test Voltage :	DC3V

Condition	Antenna	Modulation	Frequency (MHz)	-20dB BW(MHz)	if larger than CFS
NVNT	ANT1	GFSK	2432.00	1.219	Yes
NVNT	ANT1	GFSK	2452.00	1.249	Yes
NVNT	ANT1	GFSK	2471.00	1.216	Yes

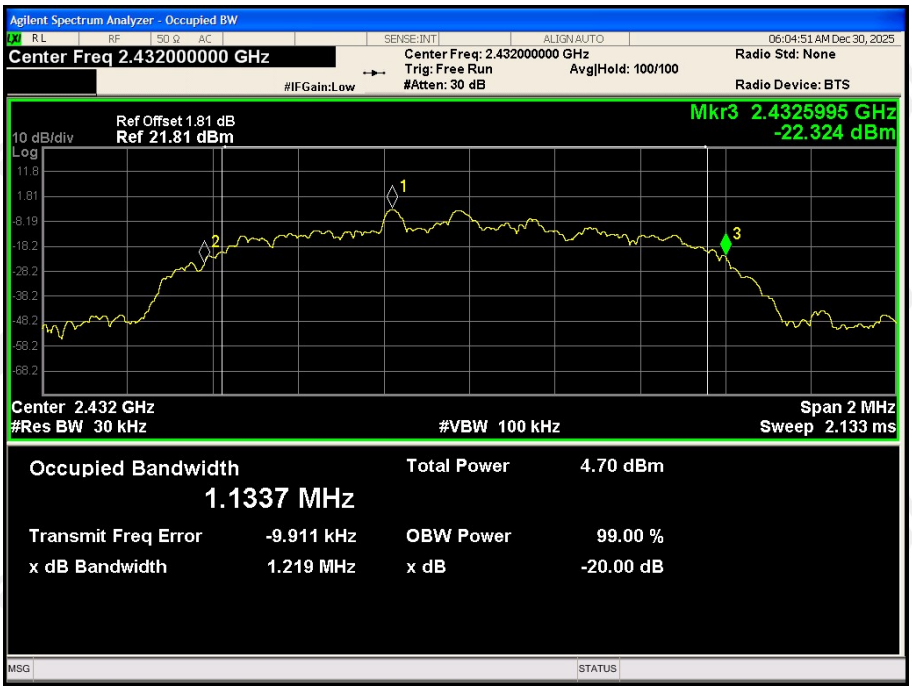

-20dB_Bandwidth_NVNT_ANT1_1-DH1_2441_00

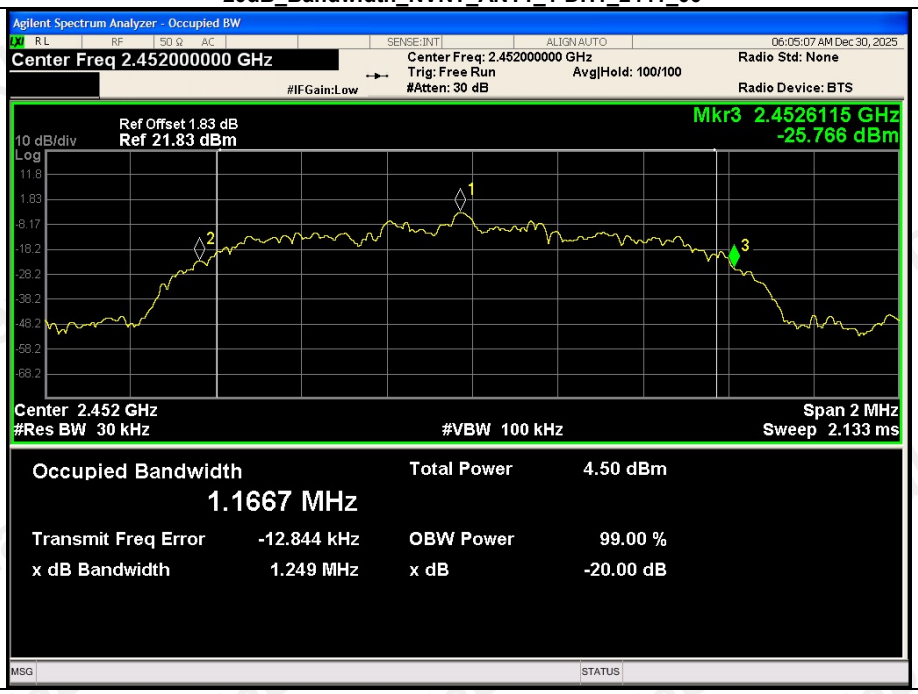

-20dB_Bandwidth_NVNT_ANT1_1-DH1_2480_00

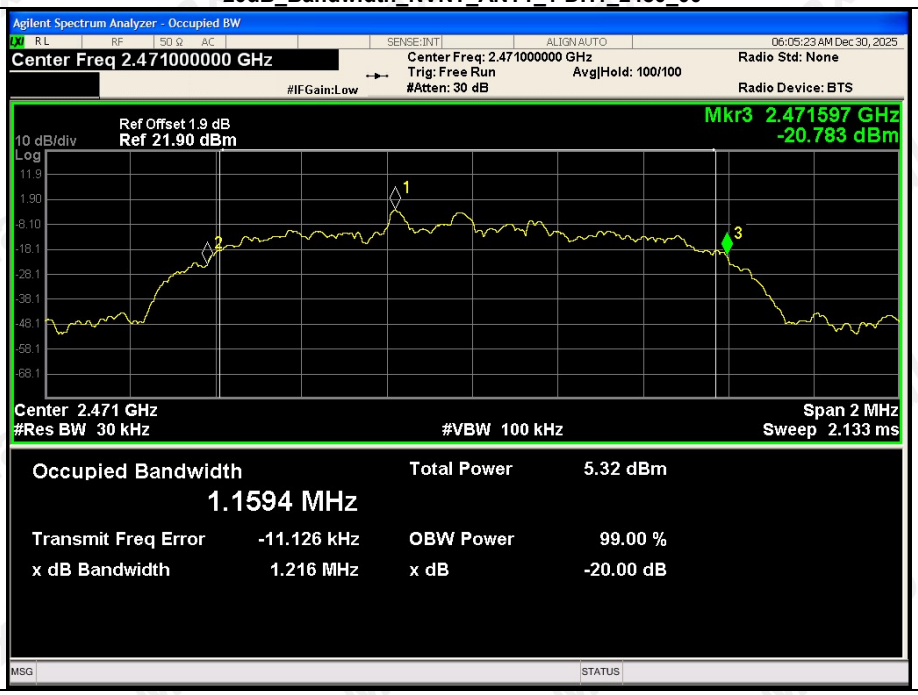

4.5 Antenna Requirement

Standard Applicable

For intentional device, according to FCC 47 CFR Section 15.203:

An intentional radiator shall be designed to ensure that no antenna other than that furnished by the responsible party shall be used with the device. The use of a permanently attached antenna or of an antenna that uses a unique coupling to the intentional radiator, the manufacturer may design the unit so that a broken antenna can be replaced by the user, but the use of a standard antenna jack or electrical connector is prohibited

Antenna Connected Construction

The maximum gain of antenna was 0dBi.

Remark:The antenna gain is provided by the customer , if the data provided by the customer is not accurate, MAXLAB Testing Co.,Ltd. does not assume any responsibility.

5 Test Setup Photos of the EUT

Reference to the appendix I for details.

6 Photos of the EUT

Reference to the appendix II for details.

********** End of Report **********