S T S L A B

RADIO TEST REPORT

Report No.:STS2111043W01

Issued for

SIMCom Wireless Solutions Limited

No.633, Jinzhong Road, Shanghai, China

Product Name:	LTE/GNSS MODULE
Brand Name:	SIMCom
Model Name:	SIM7600G
Series Model:	SIM7600G miniPCIE
FCC ID:	2AJYU-8PYA008
Test Standard:	47 CFR Part 2, 22H, 24(E), 27, 90

Any reproduction of this document must be done in full. No single part of this document may be reproduced without permission from STS, All Test Data Presented in this report is only applicable to presented Test sample.

Shenzhen STS Test Services Co., Ltd.
A 1/F, Building B, Zhuoke Science Park, No.190 Chongqing Road, HepingShequ,
Fuyong Sub-District, Bao'an District, Shenzhen, Guang Dong, China
TEL: +86-755 3688 6288 FAX: +86-755 3688 6277 E-mail:sts@stsapp.com

TESTING • CONSULTING • CERTIFICATION • SOLUTION
APPROVAL

TEST RESULT CERTIFICATION

Applicant's Name.....: SIMCom Wireless Solutions Limited

Address .....: No.633, Jinzhong Road, Shanghai, China

Manufacture's Name .....: SIMCom Wireless Solutions Limited

Address .....: No.633, Jinzhong Road, Shanghai, China

Product Description

Product Name .....: LTE/GNSS MODULE

Brand Name .....: SIMCom

Model Name .....: SIM7600G

Series Model .....: SIM7600G miniPCIE

Test Standards.....: 47 CFR Part 2, 22H, 24(E), 27, 90

Test Procedure .....: KDB 971168 D01 v03r01, ANSI C63.26 2015

This device described above has been tested by STS, the test results show that the equipment under test (EUT) is in compliance with the FCC requirements. And it is applicable only to the tested sample identified in the report.
This report shall not be reproduced except in full, without the written approval of STS, this document may be altered or revised by STS, personal only, and shall be noted in the revision of the document.

Date of Test.....:

Date of receipt of test item.....: 09 June 2020

Date (s) of performance of tests .: 06 June 2020 ~ 25 Nov. 2021

Date of Issue .....: 25 Nov. 2021

Test Result .....: Pass

Testing Engineer : Chris Chen

(Chris Chen)

Technical Manager : Sean She

(Sean she)

Authorized Signatory : Vita Li

(Vita Li)

TESTING CONSULTING SOLUTION CERTIFICATION STS APPROVAL

Table of Contents

Page

1. TEST FACTORY & MEASUREMENT UNCERTAINTY	5
2. GENERAL INFORMATION	6
3. CONDUCTED OUTPUT POWER	17
4. PEAK-TO-AVERAGE RATIO	36
5. RADIATED POWER AND EFFECTIVE ISOTROPIC RADIATED POWER	39
6. OCCUPIED BANDWIDTH	88
7. CONDUCTED BAND EDGE	92
8. CONDUCTED SPURIOUS EMISSION	94
9. RADIATED SPURIOUS EMISSION	95
10. FREQUENCY STABILITY	138
APPENDIX-PHOTOS OF TEST SETUP	149

Revision History

Rev.	Issue Date	Report NO.	Effect Page	Contents
00	10 Aug. 2020	STS2006042W01	ALL	Initial Issue
01	25 Nov. 2021	STS2111043W01	ALL	Update antenna gain and test data.

1. TEST FACTORY & MEASUREMENT UNCERTAINTY

1.1 TEST FACTORY

SHENZHEN STS TEST SERVICES CO., LTD
Add. : A 1/F, Building B, Zhuoke Science Park, No.190 Chongqing Road, HepingShequ, Fuyong Sub-District, Bao'an District, Shenzhen, Guang Dong, China
FCC test Firm Registration Number: 625569
IC test Firm Registration Number: 12108A
A2LA Certificate No.: 4338.01

1.2 MEASUREMENT UNCERTAINTY

The reported uncertainty of measurement y ± U, where expended uncertainty U is based on a standard uncertainty multiplied by a coverage factor of k=2, providing a level of confidence of approximately 95 %.

No.	Item	Uncertainty
1	RF output power, conducted	±0.68dB
2	Unwanted Emissions, conducted	±2.988dB
3	All emissions, radiated 9K-30MHz	±2.84dB
4	All emissions, radiated 30M-1GHz	±4.39dB
5	All emissions, radiated 1G-6GHz	±5.10dB
6	All emissions, radiated>6G	±5.48dB
7	Conducted Emission (9KHz-150KHz)	±2.79dB
8	Conducted Emission (150KHz-30MHz)	±2.80dB

2. GENERAL INFORMATION

2.1 TECHNICAL SPECIFICATIONS AND REGULATIONS

2.1.1 PRODUCT DESCRIPTION

A major technical description of EUT is described as following:

Product Name:	LTE/GNSS MODULE
Trade Name	SIMCom
Model Name	SIM7600G
Series Model	SIM7600G miniPCIE
Model Difference	Only different in model name and appearance.
Frequency Bands:	U.S. Bands: LTE FDD Band 2 LTE FDD Band 4 LTE FDD Band 5 LTE FDD Band 12 LTE FDD Band 13 LTE FDD Band 25 LTE FDD Band 26 LTE TDD Band 41 LTE FDD Band 66
SIM CARD:	Only support single SIM Card.
Antenna:	Monopole Antenna
Antenna gain:	Band2:8dBi, Band4:5dBi, Band5:8dBi, Band12:7dBi, Band13:8dBi, Band25:8dBi, Band26:8dBi, Band41:8dBi, Band66:5dBi
Power Rating:	Input: 3.8V
Extreme Vol. Limits:	3.3V to 4.2V (Nominal 3.8V)
Extreme Temp. Tolerance:	-40℃ to +85℃
Hardware version number:	V2.02
Software version number:	SIM7600M21-A_V2.0

2.1.2 PRODUCT SPECIFICATION SUBJECTIVE TO THIS STANDARD

Product Specification Subjective To This Standard	
Tx Frequency	LTE Band 2:1850~1910MHz LTE Band 4:1710~1755MHz LTE Band 5:824~849MHz LTE Band 12:699~716MHz LTE Band 13:777~787MHz LTE Band 25:1850~1915MHz LTE Band 26:814~849MHz LTE Band 41:2496~2690MHz LTE Band 66:1710~1780MHz
Rx Frequency	LTE Band 2:1930 ~1990MHz LTE Band 4:2110~2155MHz LTE Band 5:869~894MHz LTE Band 12:729~746MHz LTE Band 13:746~756MHz LTE Band 25:1930~1995MHz LTE Band 26:859~894MHz LTE Band 41:2496~2690MHz LTE Band 66:2110~2200MHz
Bandwidth	LTE Band 2: 1.4MHz / 3MHz / 5MHz / 10MHz / 15MHz /20MHz LTE Band 4: 1.4MHz / 3MHz / 5MHz / 10MHz / 15MHz /20MHz LTE Band 5: 1.4MHz / 3MHz / 5MHz / 10MHz LTE Band 12: 1.4MHz / 3MHz / 5MHz / 10MHz LTE Band 13: 5MHz / 10MHz LTE Band 25: 1.4MHz / 3MHz / 5MHz / 10MHz / 15MHz /20MHz LTE Band 26: 1.4MHz / 3MHz / 5MHz / 10MHz/15MHz LTE Band 41: 5MHz / 10MHz / 15MHz /20MHz LTE Band 66: 1.4MHz / 3MHz / 5MHz / 10MHz / 15MHz /20MHz
Maximum Output Power	LTE Band 2: 23.50 dBm LTE Band 4: 24.30 dBm LTE Band 5: 25.16 dBm LTE Band 12: 24.50 dBm LTE Band 13: 22.43 dBm LTE Band 25: 23.15 dBm LTE Band 26: 23.84 dBm LTE Band 41: 22.57 dBm LTE Band 66: 22.78 dBm
Type of Modulation	QPSK /16QAM

RF Function	Band	UE Category UL	Modulation	Power Class	Ant Gain(dBi)	Ant Type	SIM Card
LTE	FDD:B2,B4, B5, B12,B13,B25,B26, B66	1	QPSK, 16QAM	3	B2:8 B4:5 B5:8 B12:7 B13:8 B25:8 B26:8 B41:8 B66:5	Monopole Antenna	1 SIM 1 is used to tested.
	TDD: B41						

2.1.3 EMISSION DESIGNATOR

LTE Band 2	Emission Designator	Emission Designator
BW(MHz)	(99%OBW)QPSK	(99%OBW)16QAM
1.4	1M11G7D	1M10W7D
3	2M68G7D	2M68W7D
5	4M51G7D	4M53W7D
10	8M92G7D	\
15	13M4G7D	\
20	17M9G7D	\
LTE Band 4	Emission Designator	Emission Designator
BW(MHz)	(99%OBW)QPSK	(99%OBW)16QAM
1.4	1M11G7D	1M10W7D
3	2M69G7D	2M68W7D
5	4M53G7D	4M53W7D
10	8M94G7D	\
15	13M4G7D	\
20	17M9G7D	\
LTE Band 5	Emission Designator	Emission Designator
BW(MHz)	(99%OBW)QPSK	(99%OBW)16QAM
1.4	1M11G7D	1M10W7D
3	2M69G7D	2M68W7D
5	4M51G7D	4M53W7D
10	8M91G7D	\
LTE Band 12	Emission Designator	Emission Designator
BW(MHz)	(99%OBW)QPSK	(99%OBW)16QAM
1.4	1M10G7D	1M10W7D
3	2M69G7D	2M68W7D
5	4M52G7D	4M53W7D
10	8M94G7D	\
LTE Band 13	Emission Designator	Emission Designator
BW(MHz)	(99%OBW)QPSK	(99%OBW)16QAM
5	4M51G7D	4M54W7D
10	8M96G7D	\
LTE Band 25	Emission Designator	Emission Designator
BW(MHz)	(99%OBW)QPSK	(99%OBW)16QAM
1.4	1M10G7D	1M10W7D
3	2M69G7D	2M68W7D
5	4M53G7D	4M52W7D
10	8M92G7D	\
15	13M4G7D	\
20	17M9G7D	\
LTE Band 26 (Part 22)	Emission Designator	Emission Designator
BW(MHz)	(99%OBW)QPSK	(99%OBW)16QAM
1.4	1M10G7D	1M10W7D
3	2M69G7D	2M68W7D
5	4M52G7D	4M53W7D
10	8M92G7D	\
15	13M5G7D	\

LTE Band 26 (Part 90)	Emission Designator	Emission Designator
BW(MHz)	(99%OBW)QPSK	(99%OBW)16QAM
1.4	1M10G7D	1M10W7D
3	2M69G7D	2M68W7D
5	4M53G7D	4M53W7D
10	8M92G7D	\
LTE Band 41	Emission Designator	Emission Designator
BW(MHz)	(99%OBW)QPSK	(99%OBW)16QAM
5	4M52G7D	4M52W7D
10	8M94G7D	\
15	13M5G7D	\
20	17M9G7D	\
LTE Band 66	Emission Designator	Emission Designator
BW(MHz)	(99%OBW)QPSK	(99%OBW)16QAM
1.4	1M11G7D	1M10W7D
3	2M69G7D	2M68W7D
5	4M51G7D	4M53W7D
10	8M93G7D	\
15	13M4G7D	\
20	17M9G7D	\

2.1.4 TEST CONFIGURATION OF EQUIPMENT UNDER TEST

Antenna port conducted and radiated test items listed below are performed according to KDB 971168 D01 v03r01 and ANSI C63.26 2015 Power Meas. License Digital Systems with maximum output power. Radiated measurements are performed by rotating the EUT in three different orthogonal test planes tofind the maximum emission.

Remark:

1. The mark 'v'means that this configuration is chosen for testing
2. The mark '-'means that this bandwidth is not supported.
3. The device is investigated from 30MHz to 10 times of fundamental signal for radiated.

ITEMS	Band	Bandwidth (MHz)						Modulation		RB #			Test Channel		
		1.4	3	5	10	15	20	QPSK	16QAM	1	Half	Full	L	M	H
Max. Output Power	2	v	v	v	v	v	v	v	v	v	v	v	v	v	v
	4	v	v	v	v	v	v	v	v	v	v	v	v	v	v
	5	v	v	v	v			v	v	v	v	v	v	v	v
	12	v	v	v	v			v	v	v	v	v	v	v	v
	13			v	v			v	v	v	v	v		v	
	25	v	v	v	v	v	v	v	v	v	v	v	v	v	v
	26	v	v	v	v	v		v	v	v	v	v	v	v	v
	41			v	v	v	v	v	v	v	v	v	v	v	v
	66	v	v	v	v	v	v	v	v	v	v	v	v	v	v
Peak&Avera Ratio	2						v	v	v	v		v	v	v	v
	4						v	v	v	v		v	v	v	v
	5				v			v	v	v		v	v	v	v
	12				v			v	v	v		v	v	v	v
	13				v			v	v	v		v		v	
	25						v	v	v	v		v	v	v	v
	26					v		v	v	v		v	v	v	v
	41						v	v	v	v		v	v	v	v
	66						v	v	v	v		v	v	v	v
26dB&99% Bandwidth	2	v	v	v	v	v	v	v	v			v	v	v	v
	4	v	v	v	v	v	v	v	v			v	v	v	v
	5	v	v	v	v			v	v			v	v	v	v
	12	v	v	v	v			v	v			v	v	v	v
	13			v	v			v	v			v		v	
	25	v	v	v	v	v	v	v	v			v	v	v	v
	26	v	v	v	v	v		v	v			v	v	v	v
	41			v	v	v	v	v	v			v	v	v	v
	66	v	v	v	v	v	v	v	v			v	v	v	v

Conducted Band Edge	2	V	V	V	V	V	V	V	V	V		V	V	V	V
	4	V	V	V	V	V	V	V	V	V		V	V	V	V
	5	V	V	V	V			V	V	V		V	V	V	V
	12	V	V	V	V			V	V	V		V	V	V	V
	13			V	V			V	V	V		V		V	
	25	V	V	V	V	V	V	V	V	V		V	V	V	V
	26	V	V	V	V	V		V	V	V		V	V	V	V
	41			V	V	V	V	V	V	V		V	V	V	V
	66	V	V	V	V	V	V	V	V	V		V	V	V	V
Conducted Spurious Emission	2	V	V	V	V	V	V	V	V	V			V	V	V
	4	V	V	V	V	V	V	V	V	V			V	V	V
	5	V	V	V	V			V	V	V			V	V	V
	12	V	V	V	V			V	V	V			V	V	V
	13			V	V			V	V	V				V	
	25	V	V	V	V	V	V	V	V	V			V	V	V
	26	V	V	V	V	V		V	V	V			V	V	V
	41			V	V	V	V	V	V	V			V	V	V
	66	V	V	V	V	V	V	V	V	V			V	V	V
Frequency Stability	2				V			V				V		V	
	4				V			V				V		V	
	5				V			V				V		V	
	12				V			V				V		V	
	13				V			V				V		V	
	25				V			V				V		V	
	26				V			V				V		V	
	41				V			V				V		V	
	66				V			V				V		V	
E.R.P.& E.I.R.P.	2	V	V	V	V	V	V	V	V	V			V	V	V
	4	V	V	V	V	V	V	V	V	V			V	V	V
	5	V	V	V	V			V	V	V			V	V	V
	12	V	V	V	V			V	V	V			V	V	V
	13			V	V			V	V	V				V	
	25	V	V	V	V	V	V	V	V	V			V	V	V
	26	V	V	V	V	V		V	V	V			V	V	V
	41			V	V	V	V	V	V	V			V	V	V
	66	V	V	V	V	V	V	V	V	V			V	V	V

Radiated Spurious Emission	2	v	v	v	v	v	v	v		v			v	v	v
	4	v	v	v	v	v	v	v		v			v	v	v
	5	v	v	v	v			v		v			v	v	v
	12	v	v	v	v			v		v			v	v	v
	13			v	v			v		v				v	
	25	v	v	v	v	v	v	v		v			v	v	v
	26	v	v	v	v	v		v		v			v	v	v
	41			v	v	v	v	v		v			v	v	v
	66	v	v	v	v	v	v	v		v			v	v	v

2.1.5 RELATED SUBMITTAL(S) / GRANT (S)

This submittal(s) (test report) is intended for filing to comply with the 47 CFR Part 2, 22H, 24(E), 27, 90.

2.1.6 SPECIAL ACCESSORIES

The battery and the charger, earphone supplied by the applicant were used as accessories and being tested with eut intended for fcc grant together.

2.1.7 EUT CONFIGURATION

The EUT configuration for testing is installed on RF field strength measurement to meet the Commission's requirement and operating in a manner which intends to maximize its emission characteristics in a continuous normal application.

2.1.8 EUT EXERCISE

The Transmitter was operated in the maximum output power mode through Communication Tester. The TX frequency was fixed which was for the purpose of the measurements.

2.1.9 CONFIGURATION OF EUT SYSTEM

The EUT configuration for testing is installed on RF field strength measurement to meet the Commission's requirement and operating in a manner which intends to maximize its emission characteristics in a continuous normal application.

E-1
EUT

Table 2-1 Equipment Used in EUT System

Item	Equipment	Model No.	Serial No.	Note
N/A	N/A	N/A	N/A	N/A

Note:

(1) The support equipment was authorized by Declaration of Confirmation.

(2) For detachable type I/O cable should be specified the length in cm in 『Length』 column.

2.1.10 MEASUREMENT INSTRUMENTS

The radiated emission testing was performed according to the procedures of ANSI C63.26 2015 and FCC CFR 47 rules of 2.1046, 2.1047, 2.1049, 2.1051, 2.1053, 2.1055, 2.1057.

Radiation Test equipment

Kind of Equipment	Manufacturer	Type No.	Serial No.	Last calibration	Calibrated until
Test Receiver	R&S	ESCI	101427	2021.09.30	2022.09.29
Signal Analyzer	R&S	FSV 40-N	101823	2021.09.30	2022.09.29
Signal Generator	Agilent	83752A	3610A02740	2021.09.30	2022.09.29
Wireless Communications Test Set	R&S	CMW 500	133884	2021.03.04	2022.03.03
Bilog Antenna	TESEQ	CBL6111D	34678	2020.10.12	2022.10.11
Horn Antenna	SCHWARZBECK	BBHA 9120D	02014	2021.10.11	2023.10.10
Bilog Antenna	TESEQ	CBL6111D	45873	2020.10.12	2022.10.11
Horn Antenna	SCHWARZBECK	BBHA 9120D	9120D-1343	2020.10.12	2022.10.11
SHF-EHF Horn Antenna (18G-40GHz)	A-INFO	LB-180400-KF	J211020657	2020.10.12	2022.10.11
Pre-Amplifier (0.1M-3GHz)	EM	EM330	060665	2021.10.08	2022.10.07
Pre-Amplifier (1G-18GHz)	SKET	LNPA-01018G-45	SK2018080901	2021.09.30	2022.09.29
Pre-Amplifier (18G-40GHz)	SKET	LNPA-1840-50	SK2018101801	2021.09.28	2022.09.27
Turn table	EM	SC100_1	60531	N/A	N/A
Antenna mast	EM	SC100	N/A	N/A	N/A
Temperature & Humidity	HH660	Mieo	N/A	2021.10.09	2022.10.08
Test SW	BULUN	BL410-E/18.905			

RF Connected Test

Kind of Equipment	Manufacturer	Type No.	Serial No.	Last calibration	Calibrated until
Universal Radio communication tester	R&S	CMU200	119907	2021.09.29	2022.09.28
Wireless Communications Test Set	R&S	CMW 500	133884	2021.03.04	2022.03.03
Signal Analyzer	Agilent	N9020A	MY52440124	2021.03.04	2022.03.03
Temperature& Humidity test chamber	Safety test	AG80L	171200018	2021.03.04	2022.03.03
Programmable power supply	Agilent	E3642A	MY40002025	2021.10.08	2022.10.07
Temperature & Humidity	SW-108	SuWei	N/A	2021.03.04	2022.03.03
Universal Radio communication tester	R&S	CMU200	119907	2021.09.29	2022.09.28
Test SW	FARAD	LZ-RF /LzRf-3A3			

2.1.11 MEASUREMENT RESULTS EXPLANATION EXAMPLE

For all conducted test items:
The offset level is set in the spectrum analyzer to compensate the RF cable loss and attenuator factorbetween EUT conducted output port and spectrum analyzer. With the offset compensation, the spectrum analyzer reading level is exactly the EUT RF output level.
The spectrum analyzer offset is derived from RF cable loss and attenuator factor.
Offset = RF Cable Loss + Attenuator Factor.

3. CONDUCTED OUTPUT POWER

3.1 DESCRIPTION OF THE CONDUCTED OUTPUT POWER MEASUREMENT

3.1.1 MEASUREMENT METHOD

A system simulator was used to establish communication with the eut. Its parameters were set to force the eut transmitting at maximum output power. The measured power in the radio frequency on the transmitter output terminals shall be reported.
Configuration follows KDB 971168 D01 v03r01.

3.1.2 TEST SETUP

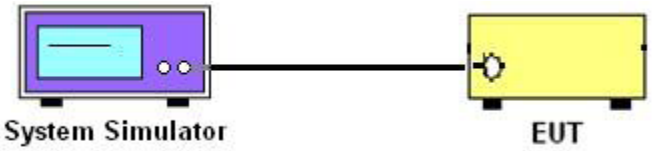

3.1.3 TEST PROCEDURES

1. The transmitter output port was connected to system simulator.

2. Set EUT at maximum power through the system simulator.

3. Select lowest/middle/highest channels for each band and different modulation.

4. Measure and record the power level from the system simulator.

3.1.4 TEST RESULTS

LTE Band 2 Maximum Average Power [dBm]						
BW [MHz]	RB Size	RB Offset	Mod	Lowest	Middle	Highest
1.4	1	0	QPSK	23.16	23.25	23.18
1.4	1	2		22.95	22.98	22.95
1.4	1	5		22.66	22.72	22.70
1.4	3	0		22.37	22.44	22.43
1.4	3	1		22.08	22.21	22.21
1.4	3	2		21.82	21.98	21.95
1.4	6	0		21.52	21.69	21.75
1.4	1	0	16-QAM	22.96	23.04	22.89
1.4	1	2		22.69	22.80	22.69
1.4	1	5		22.46	22.59	22.47
1.4	3	0		22.18	22.38	22.18
1.4	3	1		21.92	22.12	21.88
1.4	3	2		21.66	21.88	21.63
1.4	6	0		21.37	21.61	21.34
3	1	0	QPSK	22.90	23.33	23.20
3	1	7		22.64	23.03	22.93
3	1	14		22.35	22.77	22.65
3	8	0		22.11	22.56	22.35
3	8	4		21.89	22.33	22.14
3	8	7		21.66	22.07	21.86
3	15	0		21.42	21.85	21.63
3	1	0	16-QAM	22.70	23.07	22.94
3	1	7		22.41	22.85	22.74
3	1	14		22.18	22.60	22.44
3	8	0		21.97	22.31	22.22
3	8	4		21.67	22.08	22.01
3	8	7		21.44	21.81	21.73
3	15	0		21.21	21.54	21.48

LTE Band 2 Maximum Average Power [dBm]						
BW [MHz]	RB Size	RB Offset	Mod	Lowest	Middle	Highest
5	1	0	QPSK	23.03	23.39	22.96
5	1	12		22.73	23.13	22.75
5	1	24		22.47	22.84	22.47
5	12	0		22.24	22.56	22.23
5	12	6		22.02	22.28	21.95
5	12	11		21.81	21.99	21.74
5	25	0		21.55	21.73	21.47
5	1	0	16-QAM	22.75	23.11	22.70
5	1	12		22.46	22.90	22.44
5	1	24		22.26	22.68	22.17
5	12	0		22.04	22.47	21.93
5	12	6		21.80	22.26	21.66
5	12	11		21.53	21.97	21.45
5	25	0		21.29	21.75	21.22
10	1	0	QPSK	23.05	22.95	22.86
10	1	24		22.80	22.74	22.57
10	1	49		22.54	22.47	22.28
10	25	0		22.26	22.18	22.06
10	25	12		21.99	21.95	21.78
10	25	24		21.78	21.70	21.50
10	50	0		21.49	21.49	21.24

LTE Band 2 Maximum Average Power [dBm]						
BW [MHz]	RB Size	RB Offset	Mod	Lowest	Middle	Highest
15	1	0	QPSK	23.18	23.37	23.38
15	1	37		22.88	23.16	23.17
15	1	74		22.60	22.95	22.91
15	36	0		22.34	22.72	22.64
15	36	18		22.06	22.45	22.38
15	36	39		21.85	22.16	22.10
15	75	0		21.57	21.93	21.87
20	1	0	QPSK	23.38	23.42	23.50
20	1	49		23.12	23.18	23.28
20	1	99		22.89	22.88	23.07
20	50	0		22.67	22.62	22.82
20	50	24		22.41	22.32	22.54
20	50	49		22.15	22.05	22.25
20	100	0		21.91	21.82	21.96

LTE Band 4 Maximum Average Power [dBm]						
BW [MHz]	RB Size	RB Offset	Mod	Lowest	Middle	Highest
1.4	1	0	QPSK	24.05	24.16	24.07
1.4	1	2		23.78	23.88	23.86
1.4	1	5		23.51	23.64	23.57
1.4	3	0		23.22	23.36	23.34
1.4	3	1		22.95	23.10	23.12
1.4	3	2		22.66	22.86	22.88
1.4	6	0		22.40	22.65	22.66
1.4	1	0	16-QAM	23.75	23.87	23.78
1.4	1	2		23.55	23.64	23.50
1.4	1	5		23.29	23.35	23.30
1.4	3	0		23.03	23.12	23.05
1.4	3	1		22.80	22.83	22.78
1.4	3	2		22.52	22.61	22.54
1.4	6	0		22.26	22.37	22.30
3	1	0	QPSK	23.82	23.88	23.88
3	1	7		23.59	23.62	23.59
3	1	14		23.29	23.35	23.37
3	8	0		22.99	23.05	23.17
3	8	4		22.72	22.81	22.89
3	8	7		22.45	22.52	22.67
3	15	0		22.17	22.28	22.47
3	1	0	16-QAM	23.53	23.66	23.59
3	1	7		23.32	23.36	23.30
3	1	14		23.10	23.09	23.04
3	8	0		22.82	22.85	22.77
3	8	4		22.56	22.56	22.55
3	8	7		22.29	22.35	22.28
3	15	0		22.06	22.13	21.99

LTE Band 4 Maximum Average Power [dBm]						
BW [MHz]	RB Size	RB Offset	Mod	Lowest	Middle	Highest
5	1	0	QPSK	24.11	24.11	24.21
5	1	12		23.83	23.86	24.01
5	1	24		23.59	23.56	23.73
5	12	0		23.37	23.31	23.51
5	12	6		23.07	23.01	23.23
5	12	11		22.84	22.78	22.97
5	25	0		22.55	22.50	22.73
5	1	0	16-QAM	23.83	23.86	23.93
5	1	12		23.62	23.61	23.66
5	1	24		23.40	23.34	23.45
5	12	0		23.20	23.10	23.17
5	12	6		22.96	22.81	22.91
5	12	11		22.68	22.52	22.68
5	25	0		22.47	22.29	22.39
10	1	0	QPSK	24.08	24.08	24.00
10	1	24		23.80	23.79	23.74
10	1	49		23.56	23.49	23.53
10	25	0		23.30	23.28	23.31
10	25	12		23.05	23.00	23.05
10	25	24		22.75	22.76	22.77
10	50	0		22.53	22.51	22.55

LTE Band 4 Maximum Average Power [dBm]						
BW [MHz]	RB Size	RB Offset	Mod	Lowest	Middle	Highest
15	1	0	QPSK	24.12	23.85	24.05
15	1	37		23.89	23.64	23.79
15	1	74		23.65	23.39	23.55
15	36	0		23.45	23.11	23.27
15	36	18		23.24	22.83	22.98
15	36	39		22.95	22.63	22.77
15	75	0		22.68	22.40	22.53
20	1	0	QPSK	24.26	24.30	24.28
20	1	49		23.97	24.00	24.07
20	1	99		23.72	23.73	23.79
20	50	0		23.46	23.44	23.54
20	50	24		23.17	23.20	23.27
20	50	49		22.93	22.97	23.01
20	100	0		22.70	22.77	22.74

LTE Band 5 Maximum Average Power [dBm]						
BW [MHz]	RB Size	RB Offset	Mod	Lowest	Middle	Highest
1.4	1	0	QPSK	24.85	24.96	24.88
1.4	1	2		24.56	24.68	24.62
1.4	1	5		24.29	24.48	24.39
1.4	3	0		24.02	24.26	24.16
1.4	3	1		23.79	23.99	23.89
1.4	3	2		23.56	23.77	23.62
1.4	6	0		23.30	23.50	23.38
1.4	1	0	16-QAM	24.59	24.69	24.65
1.4	1	2		24.37	24.46	24.39
1.4	1	5		24.14	24.19	24.19
1.4	3	0		23.88	23.94	23.98
1.4	3	1		23.62	23.66	23.70
1.4	3	2		23.33	23.39	23.45
1.4	6	0		23.10	23.16	23.19
3	1	0	QPSK	24.77	24.99	24.79
3	1	7		24.52	24.78	24.58
3	1	14		24.25	24.49	24.34
3	8	0		24.03	24.25	24.13
3	8	4		23.81	23.98	23.85
3	8	7		23.60	23.71	23.64
3	15	0		23.31	23.49	23.43
3	1	0	16-QAM	24.49	24.75	24.54
3	1	7		24.29	24.55	24.25
3	1	14		24.04	24.30	24.05
3	8	0		23.80	24.05	23.76
3	8	4		23.52	23.79	23.49
3	8	7		23.27	23.56	23.28
3	15	0		22.99	23.33	23.03

LTE Band 5 Maximum Average Power [dBm]						
BW [MHz]	RB Size	RB Offset	Mod	Lowest	Middle	Highest
5	1	0	QPSK	24.86	24.87	24.81
5	1	12		24.63	24.65	24.55
5	1	24		24.39	24.36	24.28
5	12	0		24.17	24.11	24.04
5	12	6		23.96	23.90	23.83
5	12	11		23.76	23.68	23.62
5	25	0		23.51	23.44	23.37
5	1	0	16-QAM	24.65	24.64	24.58
5	1	12		24.37	24.42	24.35
5	1	24		24.16	24.13	24.06
5	12	0		23.87	23.86	23.84
5	12	6		23.65	23.56	23.57
5	12	11		23.39	23.27	23.33
5	25	0		23.09	22.99	23.13
10	1	0	QPSK	25.04	25.08	25.16
10	1	24		24.83	24.80	24.91
10	1	49		24.57	24.50	24.65
10	25	0		24.37	24.21	24.41
10	25	12		24.11	24.00	24.21
10	25	24		23.90	23.72	23.92
10	50	0		23.67	23.50	23.68

LTE Band 12 Maximum Average Power [dBm]						
BW [MHz]	RB Size	RB Offset	Mod	Lowest	Middle	Highest
1.4	1	0	QPSK	23.98	23.95	23.97
1.4	1	2		23.68	23.74	23.70
1.4	1	5		23.47	23.53	23.47
1.4	3	0		23.20	23.33	23.23
1.4	3	1		22.95	23.09	22.95
1.4	3	2		22.68	22.88	22.74
1.4	6	0		22.46	22.66	22.53
1.4	1	0	16-QAM	23.76	23.68	23.73
1.4	1	2		23.56	23.42	23.49
1.4	1	5		23.32	23.16	23.21
1.4	3	0		23.03	22.91	22.99
1.4	3	1		22.80	22.66	22.70
1.4	3	2		22.53	22.42	22.50
1.4	6	0		22.30	22.16	22.22
3	1	0	QPSK	24.15	24.13	24.04
3	1	7		23.93	23.85	23.83
3	1	14		23.73	23.63	23.58
3	8	0		23.45	23.42	23.34
3	8	4		23.22	23.12	23.11
3	8	7		23.01	22.86	22.81
3	15	0		22.77	22.61	22.54
3	1	0	16-QAM	23.93	23.87	23.77
3	1	7		23.71	23.61	23.52
3	1	14		23.42	23.38	23.23
3	8	0		23.22	23.12	22.95
3	8	4		22.96	22.91	22.68
3	8	7		22.71	22.69	22.43
3	15	0		22.51	22.47	22.20

LTE Band 12 Maximum Average Power [dBm]						
BW [MHz]	RB Size	RB Offset	Mod	Lowest	Middle	Highest
5	1	0	QPSK	24.22	24.41	24.41
5	1	12		23.94	24.13	24.17
5	1	24		23.66	23.84	23.92
5	12	0		23.40	23.62	23.64
5	12	6		23.12	23.39	23.39
5	12	11		22.84	23.12	23.19
5	25	0		22.55	22.87	22.92
5	1	0	16-QAM	23.99	24.16	24.16
5	1	12		23.77	23.90	23.89
5	1	24		23.50	23.64	23.61
5	12	0		23.21	23.35	23.41
5	12	6		22.93	23.06	23.12
5	12	11		22.67	22.78	22.82
5	25	0		22.41	22.57	22.61
10	1	0	QPSK	24.37	24.50	24.39
10	1	24		24.09	24.20	24.17
10	1	49		23.83	23.93	23.93
10	25	0		23.63	23.72	23.69
10	25	12		23.38	23.45	23.47
10	25	24		23.09	23.24	23.18
10	50	0		22.86	22.96	22.88

LTE Band 13 Maximum Average Power [dBm]						
BW [MHz]	RB Size	RB Offset	Mod	Lowest	Middle	Highest
5	1	0	QPSK	22.29	22.18	22.25
5	1	12		22.08	21.92	22.02
5	1	24		21.86	21.68	21.76
5	12	0		21.60	21.44	21.47
5	12	6		21.39	21.19	21.25
5	12	11		21.12	20.94	20.96
5	25	0		20.92	20.66	20.71
5	1	0	16-QAM	22.01	21.96	21.98
5	1	12		21.77	21.73	21.78
5	1	24		21.49	21.44	21.55
5	12	0		21.25	21.18	21.34
5	12	6		21.01	20.91	21.10
5	12	11		20.78	20.69	20.86
5	25	0		20.58	20.46	20.57
10	1	0	QPSK	N/A	22.43	N/A
10	1	24		N/A	22.21	N/A
10	1	49		N/A	22.00	N/A
10	25	0		N/A	21.78	N/A
10	25	12		N/A	21.52	N/A
10	25	24		N/A	21.26	N/A
10	50	0		N/A	21.02	N/A

LTE Band 25 Maximum Average Power [dBm]						
BW [MHz]	RB Size	RB Offset	Mod	Lowest	Middle	Highest
1.4	1	0	QPSK	22.73	22.53	22.68
1.4	1	2		22.47	22.29	22.48
1.4	1	5		22.21	22.04	22.26
1.4	3	0		22.00	21.84	21.97
1.4	3	1		21.72	21.56	21.70
1.4	3	2		21.42	21.26	21.47
1.4	6	0		21.14	21.03	21.22
1.4	1	0	16-QAM	22.45	22.26	22.41
1.4	1	2		22.24	21.97	22.13
1.4	1	5		21.96	21.70	21.89
1.4	3	0		21.66	21.48	21.64
1.4	3	1		21.43	21.20	21.36
1.4	3	2		21.17	20.92	21.07
1.4	6	0		20.93	20.62	20.81
3	1	0	QPSK	22.62	22.60	22.71
3	1	7		22.38	22.39	22.45
3	1	14		22.18	22.17	22.23
3	8	0		21.97	21.89	21.97
3	8	4		21.67	21.64	21.76
3	8	7		21.46	21.39	21.55
3	15	0		21.16	21.13	21.27
3	1	0	16-QAM	22.37	22.37	22.48
3	1	7		22.17	22.10	22.19
3	1	14		21.90	21.85	21.94
3	8	0		21.69	21.58	21.68
3	8	4		21.41	21.30	21.42
3	8	7		21.18	21.08	21.20
3	15	0		20.92	20.79	20.99

LTE Band 25 Maximum Average Power [dBm]						
BW [MHz]	RB Size	RB Offset	Mod	Lowest	Middle	Highest
5	1	0	QPSK	22.82	22.75	22.71
5	1	12		22.52	22.51	22.50
5	1	24		22.28	22.28	22.27
5	12	0		22.03	22.01	22.02
5	12	6		21.81	21.75	21.79
5	12	11		21.54	21.50	21.50
5	25	0		21.25	21.26	21.24
5	1	0	16-QAM	22.60	22.49	22.50
5	1	12		22.38	22.19	22.28
5	1	24		22.12	21.93	21.99
5	12	0		21.89	21.64	21.69
5	12	6		21.64	21.43	21.46
5	12	11		21.39	21.23	21.25
5	25	0		21.11	20.97	20.99
10	1	0	QPSK	22.94	22.88	22.91
10	1	24		22.69	22.62	22.62
10	1	49		22.40	22.40	22.38
10	25	0		22.17	22.17	22.10
10	25	12		21.88	21.90	21.81
10	25	24		21.66	21.63	21.54
10	50	0		21.38	21.36	21.31

LTE Band 25 Maximum Average Power [dBm]						
BW [MHz]	RB Size	RB Offset	Mod	Lowest	Middle	Highest
15	1	0	QPSK	23.01	23.04	23.10
15	1	37		22.76	22.78	22.81
15	1	74		22.54	22.50	22.51
15	36	0		22.27	22.22	22.25
15	36	18		21.98	22.01	21.97
15	36	39		21.76	21.77	21.72
15	75	0		21.55	21.52	21.49
20	1	0	QPSK	23.15	23.12	23.08
20	1	49		22.95	22.89	22.87
20	1	99		22.70	22.64	22.60
20	50	0		22.47	22.39	22.35
20	50	24		22.25	22.18	22.14
20	50	49		22.03	21.92	21.94
20	100	0		21.78	21.65	21.73

LTE Band 26(Part 22) Maximum Average Power [dBm]						
BW [MHz]	RB Size	RB Offset	Mod	Lowest	Middle	Highest
1.4	1	0	QPSK	23.22	23.18	23.31
1.4	1	2		22.98	22.88	23.11
1.4	1	5		22.76	22.60	22.83
1.4	3	0		22.54	22.34	22.60
1.4	3	1		22.27	22.04	22.31
1.4	3	2		22.02	21.78	22.01
1.4	6	0		21.74	21.54	21.78
1.4	1	0	16-QAM	22.99	22.93	23.03
1.4	1	2		22.76	22.65	22.82
1.4	1	5		22.50	22.41	22.53
1.4	3	0		22.25	22.12	22.30
1.4	3	1		22.02	21.85	22.03
1.4	3	2		21.72	21.63	21.81
1.4	6	0		21.42	21.38	21.54
3	1	0	QPSK	23.41	23.44	23.31
3	1	7		23.15	23.21	23.07
3	1	14		22.87	22.95	22.78
3	8	0		22.64	22.70	22.56
3	8	4		22.35	22.46	22.34
3	8	7		22.06	22.19	22.09
3	15	0		21.77	21.94	21.85
3	1	0	16-QAM	23.18	23.18	23.03
3	1	7		22.90	22.90	22.81
3	1	14		22.69	22.66	22.58
3	8	0		22.39	22.40	22.33
3	8	4		22.09	22.14	22.07
3	8	7		21.85	21.90	21.83
3	15	0		21.57	21.67	21.56

LTE Band 26(Part 22) Maximum Average Power [dBm]						
BW [MHz]	RB Size	RB Offset	Mod	Lowest	Middle	Highest
5	1	0	QPSK	23.66	23.58	23.60
5	1	12		23.36	23.37	23.31
5	1	24		23.16	23.12	23.05
5	12	0		22.95	22.90	22.81
5	12	6		22.66	22.63	22.54
5	12	11		22.45	22.35	22.33
5	25	0		22.21	22.13	22.10
5	1	0	16-QAM	23.43	23.28	23.36
5	1	12		23.14	23.03	23.13
5	1	24		22.86	22.79	22.87
5	12	0		22.61	22.52	22.66
5	12	6		22.36	22.28	22.39
5	12	11		22.16	22.02	22.18
5	25	0		21.96	21.76	21.91
10	1	0	QPSK	23.62	23.60	23.55
10	1	24		23.37	23.37	23.26
10	1	49		23.12	23.14	23.04
10	25	0		22.90	22.91	22.75
10	25	12		22.61	22.67	22.47
10	25	24		22.36	22.41	22.25
10	50	0		22.14	22.18	22.01

LTE Band 26(Part 22) Maximum Average Power [dBm]						
BW [MHz]	RB Size	RB Offset	Mod	Lowest	Middle	Highest
15	1	0	QPSK	23.78	23.84	23.80
15	1	37		23.51	23.55	23.51
15	1	74		23.25	23.25	23.24
15	36	0		23.01	22.95	23.00
15	36	18		22.72	22.73	22.72
15	36	39		22.42	22.48	22.50
15	75	0		22.16	22.23	22.20

LTE Band 26(Part 90) Maximum Average Power [dBm]						
BW [MHz]	RB Size	RB Offset	Mod	Lowest	Middle	Highest
1.4	1	0	QPSK	22.61	22.56	22.48
1.4	1	2		22.36	22.33	22.26
1.4	1	5		22.06	22.11	21.97
1.4	3	0		21.84	21.82	21.74
1.4	3	1		21.62	21.61	21.44
1.4	3	2		21.40	21.35	21.21
1.4	6	0		21.16	21.12	20.99
1.4	1	0	16-QAM	22.39	22.27	22.21
1.4	1	2		22.13	22.03	21.97
1.4	1	5		21.93	21.82	21.77
1.4	3	0		21.67	21.56	21.54
1.4	3	1		21.46	21.31	21.26
1.4	3	2		21.18	21.07	21.06
1.4	6	0		20.97	20.81	20.80
3	1	0	QPSK	22.85	22.91	22.75
3	1	7		22.57	22.65	22.47
3	1	14		22.29	22.39	22.24
3	8	0		22.01	22.13	21.96
3	8	4		21.75	21.85	21.67
3	8	7		21.46	21.56	21.45
3	15	0		21.22	21.31	21.15
3	1	0	16-QAM	22.57	22.67	22.54
3	1	7		22.37	22.47	22.32
3	1	14		22.14	22.18	22.04
3	8	0		21.92	21.89	21.74
3	8	4		21.66	21.60	21.53
3	8	7		21.36	21.39	21.32
3	15	0		21.15	21.09	21.09

LTE Band 26(Part 90) Maximum Average Power [dBm]						
BW [MHz]	RB Size	RB Offset	Mod	Lowest	Middle	Highest
5	1	0	QPSK	23.01	23.05	23.08
5	1	12		22.81	22.78	22.81
5	1	24		22.59	22.52	22.56
5	12	0		22.35	22.26	22.32
5	12	6		22.08	22.03	22.10
5	12	11		21.83	21.74	21.80
5	25	0		21.54	21.46	21.56
5	1	0	16-QAM	22.78	22.81	22.83
5	1	12		22.53	22.54	22.61
5	1	24		22.33	22.32	22.33
5	12	0		22.03	22.10	22.10
5	12	6		21.80	21.87	21.83
5	12	11		21.50	21.66	21.59
5	25	0		21.22	21.43	21.32
10	1	0	QPSK	N/A	23.12	N/A
10	1	24		N/A	22.89	N/A
10	1	49		N/A	22.61	N/A
10	25	0		N/A	22.32	N/A
10	25	12		N/A	22.04	N/A
10	25	24		N/A	21.75	N/A
10	50	0		N/A	21.47	N/A

LTE Band 41 Maximum Average Power [dBm]						
BW [MHz]	RB Size	RB Offset	Mod	Lowest	Middle	Highest
5	1	0	QPSK	21.97	21.83	21.75
5	1	12		21.73	21.62	21.51
5	1	24		21.46	21.33	21.27
5	12	0		21.25	21.13	20.98
5	12	6		20.95	20.88	20.78
5	12	11		20.67	20.64	20.57
5	25	0		20.38	20.42	20.27
5	1	0	16-QAM	21.74	21.59	21.46
5	1	12		21.52	21.36	21.22
5	1	24		21.23	21.14	21.00
5	12	0		20.94	20.87	20.72
5	12	6		20.67	20.61	20.51
5	12	11		20.42	20.33	20.28
5	25	0		20.16	20.05	20.03
10	1	0	QPSK	22.15	22.07	22.09
10	1	24		21.94	21.83	21.87
10	1	49		21.68	21.61	21.65
10	25	0		21.41	21.34	21.40
10	25	12		21.20	21.12	21.13
10	25	24		20.95	20.91	20.85
10	50	0		20.68	20.65	20.56

LTE Band 41 Maximum Average Power [dBm]						
BW [MHz]	RB Size	RB Offset	Mod	Lowest	Middle	Highest
15	1	0	QPSK	22.24	22.23	22.20
15	1	37		22.01	22.02	21.97
15	1	74		21.73	21.80	21.74
15	36	0		21.51	21.51	21.47
15	36	18		21.27	21.28	21.20
15	36	39		20.98	21.02	20.96
15	75	0		20.78	20.75	20.67
20	1	0	QPSK	22.45	22.48	22.57
20	1	49		22.19	22.25	22.35
20	1	99		21.92	21.95	22.06
20	50	0		21.68	21.65	21.78
20	50	24		21.42	21.42	21.51
20	50	49		21.14	21.17	21.30
20	100	0		20.86	20.97	21.08

LTE Band 66 Maximum Average Power [dBm]						
BW [MHz]	RB Size	RB Offset	Mod	Lowest	Middle	Highest
1.4	1	0	QPSK	21.31	21.25	21.22
1.4	1	2		21.01	21.04	20.98
1.4	1	5		20.78	20.77	20.75
1.4	3	0		20.50	20.47	20.47
1.4	3	1		20.25	20.20	20.26
1.4	3	2		19.96	19.97	20.06
1.4	6	0		19.70	19.71	19.78
1.4	1	0	16-QAM	21.01	21.04	20.95
1.4	1	2		20.76	20.82	20.72
1.4	1	5		20.56	20.56	20.44
1.4	3	0		20.33	20.36	20.24
1.4	3	1		20.03	20.11	20.01
1.4	3	2		19.75	19.84	19.75
1.4	6	0		19.45	19.60	19.47
3	1	0	QPSK	21.64	21.53	21.71
3	1	7		21.43	21.26	21.47
3	1	14		21.22	20.99	21.25
3	8	0		20.96	20.78	20.95
3	8	4		20.75	20.58	20.67
3	8	7		20.49	20.29	20.44
3	15	0		20.24	20.04	20.15
3	1	0	16-QAM	21.41	21.24	21.50
3	1	7		21.18	21.00	21.20
3	1	14		20.90	20.79	21.00
3	8	0		20.64	20.53	20.79
3	8	4		20.36	20.27	20.59
3	8	7		20.06	20.01	20.39
3	15	0		19.77	19.75	20.18

LTE Band 66 Maximum Average Power [dBm]						
BW [MHz]	RB Size	RB Offset	Mod	Lowest	Middle	Highest
5	1	0	QPSK	21.95	21.76	21.83
5	1	12		21.73	21.48	21.60
5	1	24		21.49	21.21	21.30
5	12	0		21.23	20.95	21.05
5	12	6		21.00	20.71	20.84
5	12	11		20.74	20.41	20.59
5	25	0		20.53	20.19	20.33
5	1	0	16-QAM	21.74	21.56	21.56
5	1	12		21.46	21.30	21.34
5	1	24		21.25	21.02	21.04
5	12	0		20.99	20.75	20.81
5	12	6		20.76	20.49	20.53
5	12	11		20.46	20.27	20.28
5	25	0		20.24	20.06	20.07
10	1	0	QPSK	22.11	22.08	22.04
10	1	24		21.90	21.84	21.75
10	1	49		21.70	21.56	21.46
10	25	0		21.41	21.34	21.24
10	25	12		21.14	21.10	20.95
10	25	24		20.84	20.86	20.75
10	50	0		20.56	20.59	20.47

LTE Band 66 Maximum Average Power [dBm]						
BW [MHz]	RB Size	RB Offset	Mod	Lowest	Middle	Highest
15	1	0	QPSK	22.37	22.25	22.31
15	1	37		22.08	22.04	22.10
15	1	74		21.85	21.80	21.83
15	36	0		21.63	21.57	21.60
15	36	18		21.33	21.35	21.34
15	36	39		21.13	21.14	21.08
15	75	0		20.92	20.90	20.85
20	1	0	QPSK	22.61	22.78	22.67
20	1	49		22.32	22.51	22.41
20	1	99		22.09	22.28	22.16
20	50	0		21.84	22.07	21.93
20	50	24		21.55	21.83	21.65
20	50	49		21.34	21.60	21.37
20	100	0		21.13	21.31	21.15

4. PEAK-TO-AVERAGE RATIO

4.1 DESCRIPTION OF THE CONDUCTED OUTPUT POWER MEASUREMENT

4.1.1 MEASUREMENT METHOD

Use one of the procedures presented in 4.1.3 to measure the total peak power and record as PPk. Use one of the applicable procedures presented 4.1.3 to measure the total average power and record as PAvg. Both the peak and average power levels must be expressed in the same logarithmic units (e.g., dBm). Determine the PAPR from:
PAPR (dB) = PPk (dBm) - PAvg (dBm).

4.1.2 TEST SETUP

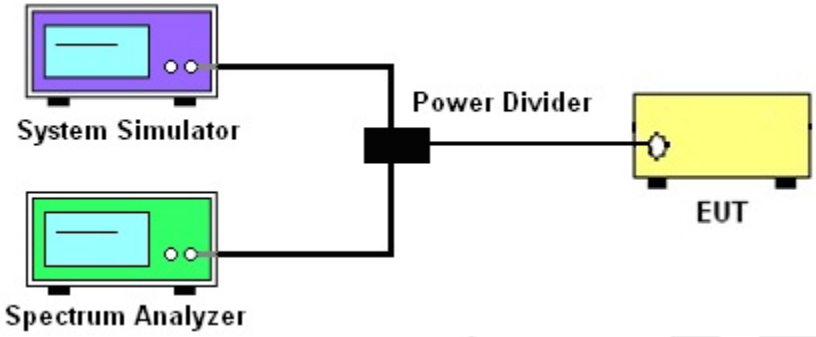

4.1.3 TEST PROCEDURES

1. The testing follows FCC KDB 971168 D01 v03r01 Section 5.7 and ANSI C63.26 2015 Section 5.2.6.

2. The EUT was connected to spectrum and system simulator via a power divider

3. Select lowest, middle, and highest channels for each band and different modulation.

4. Set the test probe and measure the peak and average power of the spectrum analyzer

5. Record the deviation as Peak to Average Ratio.

	LTE					
LTE BW	1.4M	3M	5M	10M	15M	20M
Span	3MHz	6MHz	10MHz	20MHz	30MHz	40MHz
RBW	30kHz	30kHz	100kHz	100kHz	300kHz	300kHz
VBW	100kHz	100kHz	300kHz	300kHz	1000kHz	1000kHz
Detector	PK/AVG	PK/AVG	PK/AVG	PK/AVG	PK/AVG	PK/AVG
Trace	Max	Max	Max	Max	Max	Max
Sweep Count	Auto	Auto	Auto	Auto	Auto	Auto

4.1.4 TEST RESULTS

LTE Band 2 PAR [dBm]					
BW [MHz]	RB Size	Modulation	Lowest	Middle	Highest
			P-A	P-A	P-A
20	1	QPSK	5.28	4.71	4.3
20	100		5.39	5.4	5.61
Limit			≤13dB		

LTE Band 4 PAR [dBm]					
BW [MHz]	RB Size	Modulation	Lowest	Middle	Highest
			P-A	P-A	P-A
20	1	QPSK	4.47	4.91	4.63
20	100		4.82	5.2	5.25
Limit			≤13dB		

LTE Band 5 PAR [dBm]					
BW [MHz]	RB Size	Modulation	Lowest	Middle	Highest
			P-A	P-A	P-A
10	1	QPSK	4.3	4.88	3.92
10	50		5.06	4.81	4.9
Limit			≤13dB		

LTE Band 12 PAR [dBm]					
BW [MHz]	RB Size	Modulation	Lowest	Middle	Highest
			P-A	P-A	P-A
10	1	QPSK	3.76	3.6	3.64
10	50		4.85	5.17	4.94
Limit			≤13dB		

LTE Band 13 PAR [dBm]			
BW [MHz]	RB Size	Modulation	Middle
			P-A
10	1	QPSK	4.27
10	50		5.62
Limit			≤13dB

LTE Band 25 PAR [dBm]					
BW [MHz]	RB Size	Modulation	Lowest	Middle	Highest
			P-A	P-A	P-A
20	1	QPSK	5.07	4.68	4.68
20	100		5.23	5.23	5.2
Limit			≤13dB		

LTE Band 26(Part 22) PAR [dBm]					
BW [MHz]	RB Size	Modulation	Lowest	Middle	Highest
			P-A	P-A	P-A
15	1	QPSK	3.51	3.64	3.16
15	75		4.3	4.53	4.67
Limit			≤13dB		

LTE Band 26(Part 90) PAR [dBm]			
BW [MHz]	RB Size	Modulation	Middle
			P-A
10	1	QPSK	3.51
10	50		4.84
Limit			≤13dB

LTE Band 41PAR [dBm]					
BW [MHz]	RB Size	Modulation	Lowest	Middle	Highest
			P-A	P-A	P-A
20	1	QPSK	3.59	3.23	4.04
20	100		4.67	4.42	4.51
Limit			≤13dB		

LTE Band 66 PAR [dBm]					
BW [MHz]	RB Size	Modulation	Lowest	Middle	Highest
			P-A	P-A	P-A
20	1	QPSK	4.55	4.5	4.17
20	100		4.36	4.52	5.64
Limit			≤13dB		

Note: Test chart See Appendix D

5. RADIATED POWER AND EFFECTIVE ISOTROPIC RADIATED POWER

5.1 DESCRIPTION OF THE ERP/EIRP MEASUREMENT

5.1.1 MEASUREMENT METHOD

Effective radiated power output measurements by substitution method according to ANSI C63.26 2015, and the spectrum analyzer configuration follows KDB 971168 D01 Power Meas. License Digital Systems. Mobile and portable (hand-held) stations operating are limited to average ERP, Equivalent isotropic radiated power output measurements by substitution method according to ANSI C63.26 2015, and the spectrum analyzer configuration follows KDB 971168 D01 Power Meas, Mobile and portable (hand-held) stations operating are limited to average EIRP.

5.1.2 TEST SETUP

The procedure of radiated spurious emissions is as follows:
a) Pre-calibration With pre-calibration method, the Radiated Spurious Emissions(RSE) is calculated as, RSE=Rx（dBuV）+CL（dB）+SA（dB）+Gain（dBi）-107（dBuV to dBm）The SA is calibrated using following setup.

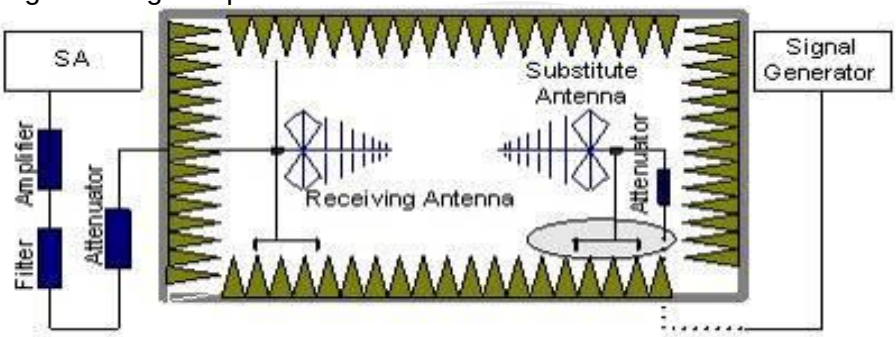

b) EUT was placed on a 1.5m non-conductive stand at a 3 m test distance from the receive antenna. A receiving antenna was placed on the antenna mast 3 m from the test item for emission measurements. The height of receiving antenna is 0.8m. The test setup refers to figure below. Detected emissions were maximized at each frequency by rotating the test item and adjusting the receiving antenna polarization. The radiated emission measurements of all non-harmonic and harmonics of the transmit frequency through the 10th harmonic measured with peak detector and 1MHz bandwidth.

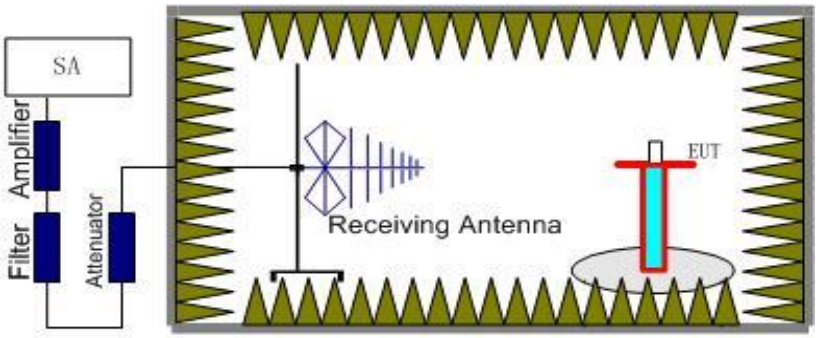

Radiated emissions measurements were made only at the upper, middle, and lower carrier frequencies It was decided that measurements at these three carrier frequencies would be sufficient to demonstrate compliance with emissions limits because it was seen that all the significant spurs occur well outside the band and no radiation was seen from a carrier in one block of any band into any of the other blocks.
The substitution method is used. Substitution values at each frequency are measured before and saved to the test software. A "reference path loss" is established and the ARpl is the attenuation of “reference path loss”, and including the gain of receive antenna, the gain of the preamplifier, the cable loss and the air loss. The measurement results are obtained as described below:
Power=PMea+ARpl

5.1.3 TEST PROCEDURES

1. The testing follows FCC KDB 971168 D01v03r01 Section 5.6 and ANSI C63.26 2015 Section 5.2.

2. The EUT was placed on a non-conductive rotating platform 1.5 meters high in a semi-anechoic chamber. The radiated emission at the fundamental frequency was measured at 3 m with a test antenna and a spectrum analyzer with Peak detector.

3. During the measurement, the system simulator parameters were set to force the EUTtransmitting at maximum output power. The maximum emission was recorded from analyzer power level (LVL) from the 360 degrees rotation of the turntable and the test antenna raised and lowered over a range from 1 to 4 m in both horizontally and vertically polarized orientations.

4. Effective Isotropic Radiated Power (EIRP) was measured by substitution method according to ANSI C63.26 2015. The EUT was replaced by dipole antenna (substitution antenna) at same location and then a known power from S.G. was applied into the dipole antenna through a Tx cable, and then recorded the maximum Analyzer reading through raised and lowered the test antenna. The correction factor (in dB) = S.G. - Tx Cable loss + Substitution antenna gain -Analyzer reading. Then the EUT's EIRP was calculated with the correction factor, EIRP/ERP= LVL +Correction factor.

5. RB Set greater than bandwidth, VB Set spectrum analyzer Maximum support.

5.1.4 TEST RESULTS

Note: Test is divided into three directions, X/Y/Z. X pattern for the worst.

Radiated Power (EIRP) for LTE Band 2 /1.4M										
BW (MHz)	UL Channel	RB Size	RB offset	Modulation	Conduction AVG Power(dBm)	Ant Gain（dBi）	EIRP (dBm)	EIRP Limit(W)	EIRP Limit(dBm)	Verdict
1.4	Lowest	1	0	QPSK	23.16	8	31.16	2.00	33.01	PASS
		1	2		23.04	8	31.04	2.00	33.01	PASS
		1	5		23.01	8	31.01	2.00	33.01	PASS
		3	0		22.94	8	30.94	2.00	33.01	PASS
		3	1		22.88	8	30.88	2.00	33.01	PASS
		3	2		22.72	8	30.72	2.00	33.01	PASS
		6	0		22.55	8	30.55	2.00	33.01	PASS
		1	0	16QAM	23.02	8	31.02	2.00	33.01	PASS
		1	2		22.87	8	30.87	2.00	33.01	PASS
		1	5		22.98	8	30.98	2.00	33.01	PASS
		3	0		22.89	8	30.89	2.00	33.01	PASS
		3	1		22.75	8	30.75	2.00	33.01	PASS
		3	2		22.57	8	30.57	2.00	33.01	PASS
		6	0		22.49	8	30.49	2.00	33.01	PASS
	Middle	1	0	QPSK	23.25	8	31.25	2.00	33.01	PASS
		1	2		23.19	8	31.19	2.00	33.01	PASS
		1	5		22.99	8	30.99	2.00	33.01	PASS
		3	0		22.91	8	30.91	2.00	33.01	PASS
		3	1		22.81	8	30.81	2.00	33.01	PASS
		3	2		22.70	8	30.70	2.00	33.01	PASS
		6	0		22.54	8	30.54	2.00	33.01	PASS
		1	0	16QAM	23.10	8	31.10	2.00	33.01	PASS
		1	2		23.16	8	31.16	2.00	33.01	PASS
		1	5		22.92	8	30.92	2.00	33.01	PASS
		3	0		22.89	8	30.89	2.00	33.01	PASS
		3	1		22.62	8	30.62	2.00	33.01	PASS
		3	2		22.64	8	30.64	2.00	33.01	PASS
		6	0		22.36	8	30.36	2.00	33.01	PASS
	Highest	1	0	QPSK	23.18	8	31.18	2.00	33.01	PASS
		1	2		23.04	8	31.04	2.00	33.01	PASS
		1	5		22.86	8	30.86	2.00	33.01	PASS
		3	0		22.84	8	30.84	2.00	33.01	PASS
		3	1		22.66	8	30.66	2.00	33.01	PASS
		3	2		22.56	8	30.56	2.00	33.01	PASS
		6	0		22.37	8	30.37	2.00	33.01	PASS
		1	0	16QAM	23.09	8	31.09	2.00	33.01	PASS
		1	2		22.92	8	30.92	2.00	33.01	PASS
		1	5		22.82	8	30.82	2.00	33.01	PASS
		3	0		22.83	8	30.83	2.00	33.01	PASS
		3	1		22.55	8	30.55	2.00	33.01	PASS
		3	2		22.49	8	30.49	2.00	33.01	PASS
		6	0		22.35	8	30.35	2.00	33.01	PASS

Radiated Power (EIRP) for LTE Band 2 /3M										
BW (MHz)	UL Channel	RB Size	RB offset	Modulation	Conduction AVG Power(dBm)	Ant Gain（dBi）	EIRP (dBm)	EIRP Limit(W)	EIRP Limit(dBm)	Verdict
3	Lowest	1	0	QPSK	22.90	8	30.90	2.00	33.01	PASS
		1	7		22.85	8	30.85	2.00	33.01	PASS
		1	14		22.84	8	30.84	2.00	33.01	PASS
		8	0		22.69	8	30.69	2.00	33.01	PASS
		8	4		22.57	8	30.57	2.00	33.01	PASS
		8	7		22.41	8	30.41	2.00	33.01	PASS
		15	0		22.36	8	30.36	2.00	33.01	PASS
		1	0	16QAM	22.77	8	30.77	2.00	33.01	PASS
		1	7		22.83	8	30.83	2.00	33.01	PASS
		1	14		22.68	8	30.68	2.00	33.01	PASS
		8	0		22.55	8	30.55	2.00	33.01	PASS
		8	4		22.55	8	30.55	2.00	33.01	PASS
		8	7		22.38	8	30.38	2.00	33.01	PASS
		15	0		22.33	8	30.33	2.00	33.01	PASS
	Middle	1	0	QPSK	23.33	8	31.33	2.00	33.01	PASS
		1	7		23.25	8	31.25	2.00	33.01	PASS
		1	14		23.13	8	31.13	2.00	33.01	PASS
		8	0		22.98	8	30.98	2.00	33.01	PASS
		8	4		22.90	8	30.90	2.00	33.01	PASS
		8	7		22.83	8	30.83	2.00	33.01	PASS
		15	0		22.78	8	30.78	2.00	33.01	PASS
		1	0	16QAM	23.26	8	31.26	2.00	33.01	PASS
		1	7		23.06	8	31.06	2.00	33.01	PASS
		1	14		23.07	8	31.07	2.00	33.01	PASS
		8	0		22.95	8	30.95	2.00	33.01	PASS
		8	4		22.70	8	30.70	2.00	33.01	PASS
		8	7		22.65	8	30.65	2.00	33.01	PASS
		15	0		22.78	8	30.78	2.00	33.01	PASS
	Highest	1	0	QPSK	23.20	8	31.20	2.00	33.01	PASS
		1	7		23.09	8	31.09	2.00	33.01	PASS
		1	14		22.96	8	30.96	2.00	33.01	PASS
		8	0		22.80	8	30.80	2.00	33.01	PASS
		8	4		22.75	8	30.75	2.00	33.01	PASS
		8	7		22.63	8	30.63	2.00	33.01	PASS
		15	0		22.51	8	30.51	2.00	33.01	PASS
		1	0	16QAM	23.17	8	31.17	2.00	33.01	PASS
		1	7		23.00	8	31.00	2.00	33.01	PASS
		1	14		22.90	8	30.90	2.00	33.01	PASS
		8	0		22.62	8	30.62	2.00	33.01	PASS
		8	4		22.57	8	30.57	2.00	33.01	PASS
		8	7		22.57	8	30.57	2.00	33.01	PASS
		15	0		22.39	8	30.39	2.00	33.01	PASS

Radiated Power (EIRP) for LTE Band 2 /5M										
BW (MHz)	UL Channel	RB Size	RB offset	Modulation	Conduction AVG Power(dBm)	Ant Gain（dBi）	EIRP (dBm)	EIRP Limit(W)	EIRP Limit(dBm)	Verdict
5	Lowest	1	0	QPSK	23.03	8	31.03	2.00	33.01	PASS
		1	12		22.92	8	30.92	2.00	33.01	PASS
		1	24		22.91	8	30.91	2.00	33.01	PASS
		12	0		22.75	8	30.75	2.00	33.01	PASS
		12	6		22.68	8	30.68	2.00	33.01	PASS
		12	11		22.59	8	30.59	2.00	33.01	PASS
		25	0		22.56	8	30.56	2.00	33.01	PASS
		1	0	16QAM	22.92	8	30.92	2.00	33.01	PASS
		1	12		22.80	8	30.80	2.00	33.01	PASS
		1	24		22.88	8	30.88	2.00	33.01	PASS
		12	0		22.62	8	30.62	2.00	33.01	PASS
		12	6		22.57	8	30.57	2.00	33.01	PASS
		12	11		22.39	8	30.39	2.00	33.01	PASS
		25	0		22.49	8	30.49	2.00	33.01	PASS
	Middle	1	0	QPSK	23.39	8	31.39	2.00	33.01	PASS
		1	12		23.35	8	31.35	2.00	33.01	PASS
		1	24		23.18	8	31.18	2.00	33.01	PASS
		12	0		23.14	8	31.14	2.00	33.01	PASS
		12	6		22.95	8	30.95	2.00	33.01	PASS
		12	11		22.89	8	30.89	2.00	33.01	PASS
		25	0		22.72	8	30.72	2.00	33.01	PASS
		1	0	16QAM	23.34	8	31.34	2.00	33.01	PASS
		1	12		23.26	8	31.26	2.00	33.01	PASS
		1	24		23.05	8	31.05	2.00	33.01	PASS
		12	0		23.04	8	31.04	2.00	33.01	PASS
		12	6		22.87	8	30.87	2.00	33.01	PASS
		12	11		22.83	8	30.83	2.00	33.01	PASS
		25	0		22.59	8	30.59	2.00	33.01	PASS
	Highest	1	0	QPSK	22.96	8	30.96	2.00	33.01	PASS
		1	12		22.79	8	30.79	2.00	33.01	PASS
		1	24		22.69	8	30.69	2.00	33.01	PASS
		12	0		22.49	8	30.49	2.00	33.01	PASS
		12	6		22.34	8	30.34	2.00	33.01	PASS
		12	11		22.22	8	30.22	2.00	33.01	PASS
		25	0		22.05	8	30.05	2.00	33.01	PASS
		1	0	16QAM	22.88	8	30.88	2.00	33.01	PASS
		1	12		22.61	8	30.61	2.00	33.01	PASS
		1	24		22.61	8	30.61	2.00	33.01	PASS
		12	0		22.33	8	30.33	2.00	33.01	PASS
		12	6		22.33	8	30.33	2.00	33.01	PASS
		12	11		22.05	8	30.05	2.00	33.01	PASS
		25	0		21.96	8	29.96	2.00	33.01	PASS

Radiated Power (EIRP) for LTE Band 2 /10M										
BW (MHz)	UL Channel	RB Size	RB offset	Modulation	Conduction AVG Power(dBm)	Ant Gain（dBi）	EIRP (dBm)	EIRP Limit(W)	EIRP Limit(dBm)	Verdict
10	Lowest	1	0	QPSK	23.05	8	31.05	2.00	33.01	PASS
		1	24		22.98	8	30.98	2.00	33.01	PASS
		1	49		22.97	8	30.97	2.00	33.01	PASS
		25	0		22.80	8	30.80	2.00	33.01	PASS
		25	12		22.76	8	30.76	2.00	33.01	PASS
		25	24		22.69	8	30.69	2.00	33.01	PASS
		50	0		22.67	8	30.67	2.00	33.01	PASS
	Middle	1	0	QPSK	22.95	8	30.95	2.00	33.01	PASS
		1	24		22.92	8	30.92	2.00	33.01	PASS
		1	49		22.80	8	30.80	2.00	33.01	PASS
		25	0		22.61	8	30.61	2.00	33.01	PASS
		25	12		22.44	8	30.44	2.00	33.01	PASS
		25	24		22.27	8	30.27	2.00	33.01	PASS
		50	0		22.22	8	30.22	2.00	33.01	PASS
	Highest	1	0	QPSK	22.86	8	30.86	2.00	33.01	PASS
		1	24		22.70	8	30.70	2.00	33.01	PASS
		1	49		22.68	8	30.68	2.00	33.01	PASS
		25	0		22.62	8	30.62	2.00	33.01	PASS
		25	12		22.49	8	30.49	2.00	33.01	PASS
		25	24		22.41	8	30.41	2.00	33.01	PASS
		50	0		22.30	8	30.30	2.00	33.01	PASS

Radiated Power (EIRP) for LTE Band 2 /15M										
BW (MHz)	UL Channel	RB Size	RB offset	Modulation	Conduction AVG Power(dBm)	Ant Gain（dBi）	EIRP (dBm)	EIRP Limit(W)	EIRP Limit(dBm)	Verdict
15	Lowest	1	0	QPSK	23.18	8	31.18	2.00	33.01	PASS
		1	37		23.14	8	31.14	2.00	33.01	PASS
		1	74		23.05	8	31.05	2.00	33.01	PASS
		36	0		22.90	8	30.90	2.00	33.01	PASS
		36	18		22.74	8	30.74	2.00	33.01	PASS
		36	39		22.56	8	30.56	2.00	33.01	PASS
		75	0		22.42	8	30.42	2.00	33.01	PASS
	Middle	1	0	QPSK	23.37	8	31.37	2.00	33.01	PASS
		1	37		23.20	8	31.20	2.00	33.01	PASS
		1	74		23.03	8	31.03	2.00	33.01	PASS
		36	0		22.91	8	30.91	2.00	33.01	PASS
		36	18		22.85	8	30.85	2.00	33.01	PASS
		36	39		22.67	8	30.67	2.00	33.01	PASS
		75	0		22.64	8	30.64	2.00	33.01	PASS
	Highest	1	0	QPSK	23.38	8	31.38	2.00	33.01	PASS
		1	37		23.35	8	31.35	2.00	33.01	PASS
		1	74		23.26	8	31.26	2.00	33.01	PASS
		36	0		23.07	8	31.07	2.00	33.01	PASS
		36	18		22.91	8	30.91	2.00	33.01	PASS
		36	39		22.83	8	30.83	2.00	33.01	PASS
		75	0		22.80	8	30.80	2.00	33.01	PASS

Radiated Power (EIRP) for LTE Band 2 /20M										
BW (MHz)	UL Channel	RB Size	RB offset	Modulation	Conduction AVG Power(dBm)	Ant Gain（dBi）	EIRP (dBm)	EIRP Limit(W)	EIRP Limit(dBm)	Verdict
20	Lowest	1	0	QPSK	23.38	8	31.38	2.00	33.01	PASS
		1	49		23.33	8	31.33	2.00	33.01	PASS
		1	99		23.14	8	31.14	2.00	33.01	PASS
		50	0		23.10	8	31.10	2.00	33.01	PASS
		50	24		22.95	8	30.95	2.00	33.01	PASS
		50	49		22.88	8	30.88	2.00	33.01	PASS
		100	0		22.81	8	30.81	2.00	33.01	PASS
	Middle	1	0	QPSK	23.42	8	31.42	2.00	33.01	PASS
		1	49		23.34	8	31.34	2.00	33.01	PASS
		1	99		23.22	8	31.22	2.00	33.01	PASS
		50	0		23.02	8	31.02	2.00	33.01	PASS
		50	24		22.83	8	30.83	2.00	33.01	PASS
		50	49		22.67	8	30.67	2.00	33.01	PASS
		100	0		22.48	8	30.48	2.00	33.01	PASS
	Highest	1	0	QPSK	23.50	8	31.50	2.00	33.01	PASS
		1	49		23.35	8	31.35	2.00	33.01	PASS
		1	99		23.25	8	31.25	2.00	33.01	PASS
		50	0		23.19	8	31.19	2.00	33.01	PASS
		50	24		23.11	8	31.11	2.00	33.01	PASS
		50	49		22.99	8	30.99	2.00	33.01	PASS
		100	0		22.95	8	30.95	2.00	33.01	PASS

Radiated Power (EIRP) for LTE Band 4 /1.4M										
BW (MHz)	UL Channel	RB Size	RB offset	Modulation	Conduction AVG Power(dBm)	Ant Gain（dBi）	EIRP (dBm)	EIRP Limit(W)	EIRP Limit(dBm)	Verdict
1.4	Lowest	1	0	QPSK	24.05	5	29.05	1.00	30.00	PASS
		1	2		23.92	5	28.92	1.00	30.00	PASS
		1	5		23.84	5	28.84	1.00	30.00	PASS
		3	0		23.71	5	28.71	1.00	30.00	PASS
		3	1		23.70	5	28.70	1.00	30.00	PASS
		3	2		23.56	5	28.56	1.00	30.00	PASS
		6	0		23.40	5	28.40	1.00	30.00	PASS
		1	0	16QAM	23.87	5	28.87	1.00	30.00	PASS
		1	2		23.80	5	28.80	1.00	30.00	PASS
		1	5		23.79	5	28.79	1.00	30.00	PASS
		3	0		23.70	5	28.70	1.00	30.00	PASS
		3	1		23.65	5	28.65	1.00	30.00	PASS
		3	2		23.39	5	28.39	1.00	30.00	PASS
		6	0		23.36	5	28.36	1.00	30.00	PASS
	Middle	1	0	QPSK	24.16	5	29.16	1.00	30.00	PASS
		1	2		24.12	5	29.12	1.00	30.00	PASS
		1	5		24.02	5	29.02	1.00	30.00	PASS
		3	0		23.83	5	28.83	1.00	30.00	PASS
		3	1		23.78	5	28.78	1.00	30.00	PASS
		3	2		23.64	5	28.64	1.00	30.00	PASS
		6	0		23.60	5	28.60	1.00	30.00	PASS
		1	0	16QAM	24.08	5	29.08	1.00	30.00	PASS
		1	2		23.93	5	28.93	1.00	30.00	PASS
		1	5		24.00	5	29.00	1.00	30.00	PASS
		3	0		23.75	5	28.75	1.00	30.00	PASS
		3	1		23.59	5	28.59	1.00	30.00	PASS
		3	2		23.44	5	28.44	1.00	30.00	PASS
		6	0		23.45	5	28.45	1.00	30.00	PASS
	Highest	1	0	QPSK	24.07	5	29.07	1.00	30.00	PASS
		1	2		23.90	5	28.90	1.00	30.00	PASS
		1	5		23.80	5	28.80	1.00	30.00	PASS
		3	0		23.64	5	28.64	1.00	30.00	PASS
		3	1		23.64	5	28.64	1.00	30.00	PASS
		3	2		23.53	5	28.53	1.00	30.00	PASS
		6	0		23.46	5	28.46	1.00	30.00	PASS
		1	0	16QAM	24.03	5	29.03	1.00	30.00	PASS
		1	2		23.71	5	28.71	1.00	30.00	PASS
		1	5		23.63	5	28.63	1.00	30.00	PASS
		3	0		23.53	5	28.53	1.00	30.00	PASS
		3	1		23.54	5	28.54	1.00	30.00	PASS
		3	2		23.35	5	28.35	1.00	30.00	PASS
		6	0		23.26	5	28.26	1.00	30.00	PASS

Radiated Power (EIRP) for LTE Band 4 /3M										
BW (MHz)	UL Channel	RB Size	RB offset	Modulation	Conduction AVG Power(dBm)	Ant Gain（dBi）	EIRP (dBm)	EIRP Limit(W)	EIRP Limit(dBm)	Verdict
3	Lowest	1	0	QPSK	23.82	5	28.82	1.00	30.00	PASS
		1	7		23.74	5	28.74	1.00	30.00	PASS
		1	14		23.73	5	28.73	1.00	30.00	PASS
		8	0		23.58	5	28.58	1.00	30.00	PASS
		8	4		23.42	5	28.42	1.00	30.00	PASS
		8	7		23.33	5	28.33	1.00	30.00	PASS
		15	0		23.32	5	28.32	1.00	30.00	PASS
		1	0	16QAM	23.76	5	28.76	1.00	30.00	PASS
		1	7		23.63	5	28.63	1.00	30.00	PASS
		1	14		23.64	5	28.64	1.00	30.00	PASS
		8	0		23.56	5	28.56	1.00	30.00	PASS
		8	4		23.38	5	28.38	1.00	30.00	PASS
		8	7		23.30	5	28.30	1.00	30.00	PASS
		15	0		23.30	5	28.30	1.00	30.00	PASS
	Middle	1	0	QPSK	23.88	5	28.88	1.00	30.00	PASS
		1	7		23.82	5	28.82	1.00	30.00	PASS
		1	14		23.77	5	28.77	1.00	30.00	PASS
		8	0		23.74	5	28.74	1.00	30.00	PASS
		8	4		23.62	5	28.62	1.00	30.00	PASS
		8	7		23.45	5	28.45	1.00	30.00	PASS
		15	0		23.36	5	28.36	1.00	30.00	PASS
		1	0	16QAM	23.69	5	28.69	1.00	30.00	PASS
		1	7		23.81	5	28.81	1.00	30.00	PASS
		1	14		23.57	5	28.57	1.00	30.00	PASS
		8	0		23.65	5	28.65	1.00	30.00	PASS
		8	4		23.49	5	28.49	1.00	30.00	PASS
		8	7		23.28	5	28.28	1.00	30.00	PASS
		15	0		23.27	5	28.27	1.00	30.00	PASS
	Highest	1	0	QPSK	23.88	5	28.88	1.00	30.00	PASS
		1	7		23.79	5	28.79	1.00	30.00	PASS
		1	14		23.65	5	28.65	1.00	30.00	PASS
		8	0		23.47	5	28.47	1.00	30.00	PASS
		8	4		23.32	5	28.32	1.00	30.00	PASS
		8	7		23.27	5	28.27	1.00	30.00	PASS
		15	0		23.23	5	28.23	1.00	30.00	PASS
		1	0	16QAM	23.80	5	28.80	1.00	30.00	PASS
		1	7		23.77	5	28.77	1.00	30.00	PASS
		1	14		23.56	5	28.56	1.00	30.00	PASS
		8	0		23.44	5	28.44	1.00	30.00	PASS
		8	4		23.15	5	28.15	1.00	30.00	PASS
		8	7		23.17	5	28.17	1.00	30.00	PASS
		15	0		23.23	5	28.23	1.00	30.00	PASS

Radiated Power (EIRP) for LTE Band 4 /5M										
BW (MHz)	UL Channel	RB Size	RB offset	Modulation	Conduction AVG Power(dBm)	Ant Gain（dBi）	EIRP (dBm)	EIRP Limit(W)	EIRP Limit(dBm)	Verdict
5	Lowest	1	0	QPSK	24.11	5	29.11	1.00	30.00	PASS
		1	12		23.91	5	28.91	1.00	30.00	PASS
		1	24		23.90	5	28.90	1.00	30.00	PASS
		12	0		23.81	5	28.81	1.00	30.00	PASS
		12	6		23.63	5	28.63	1.00	30.00	PASS
		12	11		23.57	5	28.57	1.00	30.00	PASS
		25	0		23.55	5	28.55	1.00	30.00	PASS
		1	0	16QAM	24.09	5	29.09	1.00	30.00	PASS
		1	12		23.71	5	28.71	1.00	30.00	PASS
		1	24		23.75	5	28.75	1.00	30.00	PASS
		12	0		23.76	5	28.76	1.00	30.00	PASS
		12	6		23.62	5	28.62	1.00	30.00	PASS
		12	11		23.42	5	28.42	1.00	30.00	PASS
		25	0		23.40	5	28.40	1.00	30.00	PASS
	Middle	1	0	QPSK	24.11	5	29.11	1.00	30.00	PASS
		1	12		23.94	5	28.94	1.00	30.00	PASS
		1	24		23.87	5	28.87	1.00	30.00	PASS
		12	0		23.86	5	28.86	1.00	30.00	PASS
		12	6		23.81	5	28.81	1.00	30.00	PASS
		12	11		23.73	5	28.73	1.00	30.00	PASS
		25	0		23.71	5	28.71	1.00	30.00	PASS
		1	0	16QAM	23.99	5	28.99	1.00	30.00	PASS
		1	12		23.83	5	28.83	1.00	30.00	PASS
		1	24		23.83	5	28.83	1.00	30.00	PASS
		12	0		23.79	5	28.79	1.00	30.00	PASS
		12	6		23.68	5	28.68	1.00	30.00	PASS
		12	11		23.63	5	28.63	1.00	30.00	PASS
		25	0		23.51	5	28.51	1.00	30.00	PASS
	Highest	1	0	QPSK	24.21	5	29.21	1.00	30.00	PASS
		1	12		24.18	5	29.18	1.00	30.00	PASS
		1	24		24.01	5	29.01	1.00	30.00	PASS
		12	0		23.84	5	28.84	1.00	30.00	PASS
		12	6		23.82	5	28.82	1.00	30.00	PASS
		12	11		23.66	5	28.66	1.00	30.00	PASS
		25	0		23.48	5	28.48	1.00	30.00	PASS
		1	0	16QAM	24.02	5	29.02	1.00	30.00	PASS
		1	12		24.17	5	29.17	1.00	30.00	PASS
		1	24		23.96	5	28.96	1.00	30.00	PASS
		12	0		23.73	5	28.73	1.00	30.00	PASS
		12	6		23.68	5	28.68	1.00	30.00	PASS
		12	11		23.47	5	28.47	1.00	30.00	PASS
		25	0		23.37	5	28.37	1.00	30.00	PASS

Radiated Power (EIRP) for LTE Band 4 /10M										
BW (MHz)	UL Channel	RB Size	RB offset	Modulation	Conduction AVG Power(dBm)	Ant Gain（dBi）	EIRP (dBm)	EIRP Limit(W)	EIRP Limit(dBm)	Verdict
10	Lowest	1	0	QPSK	24.08	5	29.08	1.00	30.00	PASS
		1	24		24.05	5	29.05	1.00	30.00	PASS
		1	49		23.90	5	28.90	1.00	30.00	PASS
		25	0		23.74	5	28.74	1.00	30.00	PASS
		25	12		23.55	5	28.55	1.00	30.00	PASS
		25	24		23.55	5	28.55	1.00	30.00	PASS
		50	0		23.35	5	28.35	1.00	30.00	PASS
	Middle	1	0	QPSK	24.08	5	29.08	1.00	30.00	PASS
		1	24		23.94	5	28.94	1.00	30.00	PASS
		1	49		23.76	5	28.76	1.00	30.00	PASS
		25	0		23.61	5	28.61	1.00	30.00	PASS
		25	12		23.45	5	28.45	1.00	30.00	PASS
		25	24		23.44	5	28.44	1.00	30.00	PASS
		50	0		23.26	5	28.26	1.00	30.00	PASS
	Highest	1	0	QPSK	24.00	5	29.00	1.00	30.00	PASS
		1	24		23.87	5	28.87	1.00	30.00	PASS
		1	49		23.67	5	28.67	1.00	30.00	PASS
		25	0		23.66	5	28.66	1.00	30.00	PASS
		25	12		23.60	5	28.60	1.00	30.00	PASS
		25	24		23.49	5	28.49	1.00	30.00	PASS
		50	0		23.48	5	28.48	1.00	30.00	PASS

Radiated Power (EIRP) for LTE Band 4 /15M										
BW (MHz)	UL Channel	RB Size	RB offset	Modulation	Conduction AVG Power(dBm)	Ant Gain（dBi）	EIRP (dBm)	EIRP Limit(W)	EIRP Limit(dBm)	Verdict
15	Lowest	1	0	QPSK	24.12	5	29.12	1.00	30.00	PASS
		1	37		23.93	5	28.93	1.00	30.00	PASS
		1	74		23.75	5	28.75	1.00	30.00	PASS
		36	0		23.69	5	28.69	1.00	30.00	PASS
		36	18		23.50	5	28.50	1.00	30.00	PASS
		36	39		23.35	5	28.35	1.00	30.00	PASS
		75	0		23.15	5	28.15	1.00	30.00	PASS
	Middle	1	0	QPSK	23.85	5	28.85	1.00	30.00	PASS
		1	37		23.70	5	28.70	1.00	30.00	PASS
		1	74		23.68	5	28.68	1.00	30.00	PASS
		36	0		23.67	5	28.67	1.00	30.00	PASS
		36	18		23.66	5	28.66	1.00	30.00	PASS
		36	39		23.50	5	28.50	1.00	30.00	PASS
		75	0		23.36	5	28.36	1.00	30.00	PASS
	Highest	1	0	QPSK	24.05	5	29.05	1.00	30.00	PASS
		1	37		23.88	5	28.88	1.00	30.00	PASS
		1	74		23.70	5	28.70	1.00	30.00	PASS
		36	0		23.59	5	28.59	1.00	30.00	PASS
		36	18		23.55	5	28.55	1.00	30.00	PASS
		36	39		23.50	5	28.50	1.00	30.00	PASS
		75	0		23.49	5	28.49	1.00	30.00	PASS

Radiated Power (EIRP) for LTE Band 4 /20M										
BW (MHz)	UL Channel	RB Size	RB offset	Modulation	Conduction AVG Power(dBm)	Ant Gain（dBi）	EIRP (dBm)	EIRP Limit(W)	EIRP Limit(dBm)	Verdict
20	Lowest	1	0	QPSK	24.26	5	29.26	1.00	30.00	PASS
		1	49		24.22	5	29.22	1.00	30.00	PASS
		1	99		24.04	5	29.04	1.00	30.00	PASS
		50	0		23.98	5	28.98	1.00	30.00	PASS
		50	24		23.80	5	28.80	1.00	30.00	PASS
		50	49		23.73	5	28.73	1.00	30.00	PASS
		100	0		23.71	5	28.71	1.00	30.00	PASS
	Middle	1	0	QPSK	24.30	5	29.30	1.00	30.00	PASS
		1	49		24.22	5	29.22	1.00	30.00	PASS
		1	99		24.14	5	29.14	1.00	30.00	PASS
		50	0		24.00	5	29.00	1.00	30.00	PASS
		50	24		23.82	5	28.82	1.00	30.00	PASS
		50	49		23.74	5	28.74	1.00	30.00	PASS
		100	0		23.59	5	28.59	1.00	30.00	PASS
	Highest	1	0	QPSK	24.28	5	29.28	1.00	30.00	PASS
		1	49		24.13	5	29.13	1.00	30.00	PASS
		1	99		23.95	5	28.95	1.00	30.00	PASS
		50	0		23.88	5	28.88	1.00	30.00	PASS
		50	24		23.83	5	28.83	1.00	30.00	PASS
		50	49		23.71	5	28.71	1.00	30.00	PASS
		100	0		23.53	5	28.53	1.00	30.00	PASS

Radiated Power (ERP) for LTE Band 5 /1.4M										
BW (MHz)	UL Channel	RB Size	RB offset	Modulation	Conduction AVG Power(dBm)	Ant Gain（dBi）	ERP (dBm)	ERP Limit(W)	ERP Limit(dBm)	Verdict
1.4	Lowest	1	0	QPSK	24.85	8	30.70	7.00	38.45	PASS
		1	2		24.79	8	30.64	7.00	38.45	PASS
		1	5		24.61	8	30.46	7.00	38.45	PASS
		3	0		24.50	8	30.35	7.00	38.45	PASS
		3	1		24.34	8	30.19	7.00	38.45	PASS
		3	2		24.30	8	30.15	7.00	38.45	PASS
		6	0		24.27	8	30.12	7.00	38.45	PASS
		1	0	16QAM	24.74	8	30.59	7.00	38.45	PASS
		1	2		24.73	8	30.58	7.00	38.45	PASS
		1	5		24.50	8	30.35	7.00	38.45	PASS
		3	0		24.30	8	30.15	7.00	38.45	PASS
		3	1		24.22	8	30.07	7.00	38.45	PASS
		3	2		24.16	8	30.01	7.00	38.45	PASS
		6	0		24.25	8	30.10	7.00	38.45	PASS
	Middle	1	0	QPSK	24.96	8	30.81	7.00	38.45	PASS
		1	2		24.78	8	30.63	7.00	38.45	PASS
		1	5		24.75	8	30.60	7.00	38.45	PASS
		3	0		24.56	8	30.41	7.00	38.45	PASS
		3	1		24.37	8	30.22	7.00	38.45	PASS
		3	2		24.25	8	30.10	7.00	38.45	PASS
		6	0		24.13	8	29.98	7.00	38.45	PASS
		1	0	16QAM	24.86	8	30.71	7.00	38.45	PASS
		1	2		24.67	8	30.52	7.00	38.45	PASS
		1	5		24.57	8	30.42	7.00	38.45	PASS
		3	0		24.38	8	30.23	7.00	38.45	PASS
		3	1		24.36	8	30.21	7.00	38.45	PASS
		3	2		24.19	8	30.04	7.00	38.45	PASS
		6	0		23.99	8	29.84	7.00	38.45	PASS
	Highest	1	0	QPSK	24.88	8	30.73	7.00	38.45	PASS
		1	2		24.70	8	30.55	7.00	38.45	PASS
		1	5		24.55	8	30.40	7.00	38.45	PASS
		3	0		24.52	8	30.37	7.00	38.45	PASS
		3	1		24.35	8	30.20	7.00	38.45	PASS
		3	2		24.16	8	30.01	7.00	38.45	PASS
		6	0		24.09	8	29.94	7.00	38.45	PASS
		1	0	16QAM	24.85	8	30.70	7.00	38.45	PASS
		1	2		24.61	8	30.46	7.00	38.45	PASS
		1	5		24.35	8	30.20	7.00	38.45	PASS
		3	0		24.50	8	30.35	7.00	38.45	PASS
		3	1		24.33	8	30.18	7.00	38.45	PASS
		3	2		24.10	8	29.95	7.00	38.45	PASS
		6	0		24.07	8	29.92	7.00	38.45	PASS

Radiated Power (ERP) for LTE Band 5 /3M										
BW (MHz)	UL Channel	RB Size	RB offset	Modulation	Conduction AVG Power(dBm)	Ant Gain（dBi）	ERP (dBm)	ERP Limit(W)	ERP Limit(dBm)	Verdict
3	Lowest	1	0	QPSK	24.77	8	30.62	7.00	38.45	PASS
		1	7		24.66	8	30.51	7.00	38.45	PASS
		1	14		24.49	8	30.34	7.00	38.45	PASS
		8	0		24.30	8	30.15	7.00	38.45	PASS
		8	4		24.28	8	30.13	7.00	38.45	PASS
		8	7		24.09	8	29.94	7.00	38.45	PASS
		15	0		24.07	8	29.92	7.00	38.45	PASS
		1	0	16QAM	24.69	8	30.54	7.00	38.45	PASS
		1	7		24.51	8	30.36	7.00	38.45	PASS
		1	14		24.40	8	30.25	7.00	38.45	PASS
		8	0		24.17	8	30.02	7.00	38.45	PASS
		8	4		24.17	8	30.02	7.00	38.45	PASS
		8	7		23.98	8	29.83	7.00	38.45	PASS
		15	0		24.01	8	29.86	7.00	38.45	PASS
	Middle	1	0	QPSK	24.99	8	30.84	7.00	38.45	PASS
		1	7		24.83	8	30.68	7.00	38.45	PASS
		1	14		24.67	8	30.52	7.00	38.45	PASS
		8	0		24.50	8	30.35	7.00	38.45	PASS
		8	4		24.43	8	30.28	7.00	38.45	PASS
		8	7		24.27	8	30.12	7.00	38.45	PASS
		15	0		24.10	8	29.95	7.00	38.45	PASS
		1	0	16QAM	24.88	8	30.73	7.00	38.45	PASS
		1	7		24.74	8	30.59	7.00	38.45	PASS
		1	14		24.64	8	30.49	7.00	38.45	PASS
		8	0		24.45	8	30.30	7.00	38.45	PASS
		8	4		24.29	8	30.14	7.00	38.45	PASS
		8	7		24.22	8	30.07	7.00	38.45	PASS
		15	0		23.95	8	29.80	7.00	38.45	PASS
	Highest	1	0	QPSK	24.79	8	30.64	7.00	38.45	PASS
		1	7		24.75	8	30.60	7.00	38.45	PASS
		1	14		24.63	8	30.48	7.00	38.45	PASS
		8	0		24.55	8	30.40	7.00	38.45	PASS
		8	4		24.52	8	30.37	7.00	38.45	PASS
		8	7		24.42	8	30.27	7.00	38.45	PASS
		15	0		24.23	8	30.08	7.00	38.45	PASS
		1	0	16QAM	24.73	8	30.58	7.00	38.45	PASS
		1	7		24.65	8	30.50	7.00	38.45	PASS
		1	14		24.51	8	30.36	7.00	38.45	PASS
		8	0		24.36	8	30.21	7.00	38.45	PASS
		8	4		24.34	8	30.19	7.00	38.45	PASS
		8	7		24.38	8	30.23	7.00	38.45	PASS
		15	0		24.04	8	29.89	7.00	38.45	PASS

Radiated Power (ERP) for LTE Band 5 /5M										
BW (MHz)	UL Channel	RB Size	RB offset	Modulation	Conduction AVG Power(dBm)	Ant Gain（dBi）	ERP (dBm)	ERP Limit(W)	ERP Limit(dBm)	Verdict
5	Lowest	1	0	QPSK	24.86	8	30.71	7.00	38.45	PASS
		1	12		24.79	8	30.64	7.00	38.45	PASS
		1	24		24.72	8	30.57	7.00	38.45	PASS
		12	0		24.70	8	30.55	7.00	38.45	PASS
		12	6		24.64	8	30.49	7.00	38.45	PASS
		12	11		24.46	8	30.31	7.00	38.45	PASS
		25	0		24.31	8	30.16	7.00	38.45	PASS
		1	0	16QAM	24.78	8	30.63	7.00	38.45	PASS
		1	12		24.73	8	30.58	7.00	38.45	PASS
		1	24		24.68	8	30.53	7.00	38.45	PASS
		12	0		24.56	8	30.41	7.00	38.45	PASS
		12	6		24.57	8	30.42	7.00	38.45	PASS
		12	11		24.38	8	30.23	7.00	38.45	PASS
		25	0		24.13	8	29.98	7.00	38.45	PASS
	Middle	1	0	QPSK	24.87	8	30.72	7.00	38.45	PASS
		1	12		24.75	8	30.60	7.00	38.45	PASS
		1	24		24.71	8	30.56	7.00	38.45	PASS
		12	0		24.65	8	30.50	7.00	38.45	PASS
		12	6		24.57	8	30.42	7.00	38.45	PASS
		12	11		24.39	8	30.24	7.00	38.45	PASS
		25	0		24.22	8	30.07	7.00	38.45	PASS
		1	0	16QAM	24.72	8	30.57	7.00	38.45	PASS
		1	12		24.68	8	30.53	7.00	38.45	PASS
		1	24		24.63	8	30.48	7.00	38.45	PASS
		12	0		24.47	8	30.32	7.00	38.45	PASS
		12	6		24.47	8	30.32	7.00	38.45	PASS
		12	11		24.38	8	30.23	7.00	38.45	PASS
		25	0		24.05	8	29.90	7.00	38.45	PASS
	Highest	1	0	QPSK	24.81	8	30.66	7.00	38.45	PASS
		1	12		24.62	8	30.47	7.00	38.45	PASS
		1	24		24.49	8	30.34	7.00	38.45	PASS
		12	0		24.47	8	30.32	7.00	38.45	PASS
		12	6		24.30	8	30.15	7.00	38.45	PASS
		12	11		24.15	8	30.00	7.00	38.45	PASS
		25	0		24.06	8	29.91	7.00	38.45	PASS
		1	0	16QAM	24.64	8	30.49	7.00	38.45	PASS
		1	12		24.61	8	30.46	7.00	38.45	PASS
		1	24		24.43	8	30.28	7.00	38.45	PASS
		12	0		24.35	8	30.20	7.00	38.45	PASS
		12	6		24.27	8	30.12	7.00	38.45	PASS
		12	11		23.96	8	29.81	7.00	38.45	PASS
		25	0		23.95	8	29.80	7.00	38.45	PASS

Radiated Power (ERP) for LTE Band 5 /10M										
BW (MHz)	UL Channel	RB Size	RB offset	Modulation	Conduction AVG Power(dBm)	Ant Gain（dBi）	ERP (dBm)	ERP Limit(W)	ERP Limit(dBm)	Verdict
10	Lowest	1	0	QPSK	25.04	8	30.89	7.00	38.45	PASS
		1	24		24.92	8	30.77	7.00	38.45	PASS
		1	49		24.75	8	30.60	7.00	38.45	PASS
		25	0		24.59	8	30.44	7.00	38.45	PASS
		25	12		24.58	8	30.43	7.00	38.45	PASS
		25	24		24.53	8	30.38	7.00	38.45	PASS
		50	0		24.53	8	30.38	7.00	38.45	PASS
	Middle	1	0	QPSK	25.08	8	30.93	7.00	38.45	PASS
		1	24		24.97	8	30.82	7.00	38.45	PASS
		1	49		24.79	8	30.64	7.00	38.45	PASS
		25	0		24.76	8	30.61	7.00	38.45	PASS
		25	12		24.70	8	30.55	7.00	38.45	PASS
		25	24		24.54	8	30.39	7.00	38.45	PASS
		50	0		24.51	8	30.36	7.00	38.45	PASS

Radiated Power (ERP) for LTE Band 12 /1.4M										
BW (MHz)	UL Channel	RB Size	RB offset	Modulation	Conduction AVG Power(dBm)	Ant Gain（dBi）	ERP (dBm)	ERP Limit(W)	ERP Limit(dBm)	Verdict
1.4	Lowest	1	0	QPSK	23.98	7	28.83	3.00	34.77	PASS
		1	2		23.85	7	28.70	3.00	34.77	PASS
		1	5		23.80	7	28.65	3.00	34.77	PASS
		3	0		23.67	7	28.52	3.00	34.77	PASS
		3	1		23.66	7	28.51	3.00	34.77	PASS
		3	2		23.50	7	28.35	3.00	34.77	PASS
		6	0		23.37	7	28.22	3.00	34.77	PASS
		1	0	16QAM	23.83	7	28.68	3.00	34.77	PASS
		1	2		23.82	7	28.67	3.00	34.77	PASS
		1	5		23.77	7	28.62	3.00	34.77	PASS
		3	0		23.47	7	28.32	3.00	34.77	PASS
		3	1		23.48	7	28.33	3.00	34.77	PASS
		3	2		23.50	7	28.35	3.00	34.77	PASS
		6	0		23.27	7	28.12	3.00	34.77	PASS
	Middle	1	0	QPSK	23.95	7	28.80	3.00	34.77	PASS
		1	2		23.90	7	28.75	3.00	34.77	PASS
		1	5		23.83	7	28.68	3.00	34.77	PASS
		3	0		23.65	7	28.50	3.00	34.77	PASS
		3	1		23.47	7	28.32	3.00	34.77	PASS
		3	2		23.40	7	28.25	3.00	34.77	PASS
		6	0		23.33	7	28.18	3.00	34.77	PASS
		1	0	16QAM	23.78	7	28.63	3.00	34.77	PASS
		1	2		23.83	7	28.68	3.00	34.77	PASS
		1	5		23.81	7	28.66	3.00	34.77	PASS
		3	0		23.59	7	28.44	3.00	34.77	PASS
		3	1		23.33	7	28.18	3.00	34.77	PASS
		3	2		23.33	7	28.18	3.00	34.77	PASS
		6	0		23.27	7	28.12	3.00	34.77	PASS
	Highest	1	0	QPSK	23.97	7	28.82	3.00	34.77	PASS
		1	2		23.78	7	28.63	3.00	34.77	PASS
		1	5		23.62	7	28.47	3.00	34.77	PASS
		3	0		23.50	7	28.35	3.00	34.77	PASS
		3	1		23.38	7	28.23	3.00	34.77	PASS
		3	2		23.37	7	28.22	3.00	34.77	PASS
		6	0		23.34	7	28.19	3.00	34.77	PASS
		1	0	16QAM	23.80	7	28.65	3.00	34.77	PASS
		1	2		23.75	7	28.60	3.00	34.77	PASS
		1	5		23.61	7	28.46	3.00	34.77	PASS
		3	0		23.40	7	28.25	3.00	34.77	PASS
		3	1		23.20	7	28.05	3.00	34.77	PASS
		3	2		23.18	7	28.03	3.00	34.77	PASS
		6	0		23.27	7	28.12	3.00	34.77	PASS

Radiated Power (ERP) for LTE Band 12 /3M										
BW (MHz)	UL Channel	RB Size	RB offset	Modulation	Conduction AVG Power(dBm)	Ant Gain（dBi）	ERP (dBm)	ERP Limit(W)	ERP Limit(dBm)	Verdict
3	Lowest	1	0	QPSK	24.15	7	29.00	3.00	34.77	PASS
		1	7		24.09	7	28.94	3.00	34.77	PASS
		1	14		23.97	7	28.82	3.00	34.77	PASS
		8	0		23.81	7	28.66	3.00	34.77	PASS
		8	4		23.76	7	28.61	3.00	34.77	PASS
		8	7		23.59	7	28.44	3.00	34.77	PASS
		15	0		23.51	7	28.36	3.00	34.77	PASS
		1	0	16QAM	24.14	7	28.99	3.00	34.77	PASS
		1	7		23.99	7	28.84	3.00	34.77	PASS
		1	14		23.89	7	28.74	3.00	34.77	PASS
		8	0		23.62	7	28.47	3.00	34.77	PASS
		8	4		23.68	7	28.53	3.00	34.77	PASS
		8	7		23.53	7	28.38	3.00	34.77	PASS
		15	0		23.37	7	28.22	3.00	34.77	PASS
	Middle	1	0	QPSK	24.13	7	28.98	3.00	34.77	PASS
		1	7		24.01	7	28.86	3.00	34.77	PASS
		1	14		23.93	7	28.78	3.00	34.77	PASS
		8	0		23.73	7	28.58	3.00	34.77	PASS
		8	4		23.67	7	28.52	3.00	34.77	PASS
		8	7		23.55	7	28.40	3.00	34.77	PASS
		15	0		23.40	7	28.25	3.00	34.77	PASS
		1	0	16QAM	23.98	7	28.83	3.00	34.77	PASS
		1	7		23.98	7	28.83	3.00	34.77	PASS
		1	14		23.83	7	28.68	3.00	34.77	PASS
		8	0		23.65	7	28.50	3.00	34.77	PASS
		8	4		23.55	7	28.40	3.00	34.77	PASS
		8	7		23.43	7	28.28	3.00	34.77	PASS
		15	0		23.40	7	28.25	3.00	34.77	PASS
	Highest	1	0	QPSK	24.04	7	28.89	3.00	34.77	PASS
		1	7		23.99	7	28.84	3.00	34.77	PASS
		1	14		23.92	7	28.77	3.00	34.77	PASS
		8	0		23.92	7	28.77	3.00	34.77	PASS
		8	4		23.80	7	28.65	3.00	34.77	PASS
		8	7		23.67	7	28.52	3.00	34.77	PASS
		15	0		23.66	7	28.51	3.00	34.77	PASS
		1	0	16QAM	23.89	7	28.74	3.00	34.77	PASS
		1	7		23.88	7	28.73	3.00	34.77	PASS
		1	14		23.76	7	28.61	3.00	34.77	PASS
		8	0		23.72	7	28.57	3.00	34.77	PASS
		8	4		23.78	7	28.63	3.00	34.77	PASS
		8	7		23.52	7	28.37	3.00	34.77	PASS
		15	0		23.55	7	28.40	3.00	34.77	PASS

Radiated Power (ERP) for LTE Band 12 /5M										
BW (MHz)	UL Channel	RB Size	RB offset	Modulation	Conduction AVG Power(dBm)	Ant Gain（dBi）	ERP (dBm)	ERP Limit(W)	ERP Limit(dBm)	Verdict
5	Lowest	1	0	QPSK	24.22	7	29.07	3.00	34.77	PASS
		1	12		24.16	7	29.01	3.00	34.77	PASS
		1	24		24.03	7	28.88	3.00	34.77	PASS
		12	0		23.92	7	28.77	3.00	34.77	PASS
		12	6		23.73	7	28.58	3.00	34.77	PASS
		12	11		23.68	7	28.53	3.00	34.77	PASS
		25	0		23.67	7	28.52	3.00	34.77	PASS
		1	0	16QAM	24.17	7	29.02	3.00	34.77	PASS
		1	12		24.13	7	28.98	3.00	34.77	PASS
		1	24		23.95	7	28.80	3.00	34.77	PASS
		12	0		23.77	7	28.62	3.00	34.77	PASS
		12	6		23.66	7	28.51	3.00	34.77	PASS
		12	11		23.63	7	28.48	3.00	34.77	PASS
		25	0		23.50	7	28.35	3.00	34.77	PASS
	Middle	1	0	QPSK	24.41	7	29.26	3.00	34.77	PASS
		1	12		24.26	7	29.11	3.00	34.77	PASS
		1	24		24.25	7	29.10	3.00	34.77	PASS
		12	0		24.23	7	29.08	3.00	34.77	PASS
		12	6		24.05	7	28.90	3.00	34.77	PASS
		12	11		23.86	7	28.71	3.00	34.77	PASS
		25	0		23.71	7	28.56	3.00	34.77	PASS
		1	0	16QAM	24.39	7	29.24	3.00	34.77	PASS
		1	12		24.12	7	28.97	3.00	34.77	PASS
		1	24		24.12	7	28.97	3.00	34.77	PASS
		12	0		24.07	7	28.92	3.00	34.77	PASS
		12	6		23.94	7	28.79	3.00	34.77	PASS
		12	11		23.82	7	28.67	3.00	34.77	PASS
		25	0		23.53	7	28.38	3.00	34.77	PASS
	Highest	1	0	QPSK	24.41	7	29.26	3.00	34.77	PASS
		1	12		24.36	7	29.21	3.00	34.77	PASS
		1	24		24.23	7	29.08	3.00	34.77	PASS
		12	0		24.10	7	28.95	3.00	34.77	PASS
		12	6		24.02	7	28.87	3.00	34.77	PASS
		12	11		23.85	7	28.70	3.00	34.77	PASS
		25	0		23.67	7	28.52	3.00	34.77	PASS
		1	0	16QAM	24.25	7	29.10	3.00	34.77	PASS
		1	12		24.18	7	29.03	3.00	34.77	PASS
		1	24		24.09	7	28.94	3.00	34.77	PASS
		12	0		23.94	7	28.79	3.00	34.77	PASS
		12	6		23.96	7	28.81	3.00	34.77	PASS
		12	11		23.81	7	28.66	3.00	34.77	PASS
		25	0		23.65	7	28.50	3.00	34.77	PASS

Radiated Power (ERP) for LTE Band 12 /10M										
BW (MHz)	UL Channel	RB Size	RB offset	Modulation	Conduction AVG Power(dBm)	Ant Gain（dBi）	ERP (dBm)	ERP Limit(W)	ERP Limit(dBm)	Verdict
10	Lowest	1	0	QPSK	24.37	7	29.22	3.00	34.77	PASS
		1	24		24.27	7	29.12	3.00	34.77	PASS
		1	49		24.27	7	29.12	3.00	34.77	PASS
		25	0		24.12	7	28.97	3.00	34.77	PASS
		25	12		23.96	7	28.81	3.00	34.77	PASS
		25	24		23.78	7	28.63	3.00	34.77	PASS
		50	0		23.63	7	28.48	3.00	34.77	PASS
	Middle	1	0	QPSK	24.50	7	29.35	3.00	34.77	PASS
		1	24		24.36	7	29.21	3.00	34.77	PASS
		1	49		24.19	7	29.04	3.00	34.77	PASS
		25	0		24.10	7	28.95	3.00	34.77	PASS
		25	12		24.00	7	28.85	3.00	34.77	PASS
		25	24		23.84	7	28.69	3.00	34.77	PASS
		50	0		23.69	7	28.54	3.00	34.77	PASS
	Highest	1	0	QPSK	24.39	7	29.24	3.00	34.77	PASS
		1	24		24.37	7	29.22	3.00	34.77	PASS
		1	49		24.28	7	29.13	3.00	34.77	PASS
		25	0		24.20	7	29.05	3.00	34.77	PASS
		25	12		24.06	7	28.91	3.00	34.77	PASS
		25	24		23.88	7	28.73	3.00	34.77	PASS
		50	0		23.80	7	28.65	3.00	34.77	PASS

Radiated Power (ERP) for LTE Band 13 /5M										
BW (MHz)	UL Channel	RB Size	RB offset	Modulation	Conduction AVG Power(dBm)	Ant Gain（dBi）	ERP (dBm)	ERP Limit(W)	ERP Limit(dBm)	Verdict
5	Lowest	1	0	QPSK	22.29	8	28.14	3.00	34.77	PASS
		1	12		22.14	8	27.99	3.00	34.77	PASS
		1	24		21.99	8	27.84	3.00	34.77	PASS
		12	0		21.83	8	27.68	3.00	34.77	PASS
		12	6		21.73	8	27.58	3.00	34.77	PASS
		12	11		21.71	8	27.56	3.00	34.77	PASS
		25	0		21.57	8	27.42	3.00	34.77	PASS
		1	0	16QAM	22.11	8	27.96	3.00	34.77	PASS
		1	12		22.08	8	27.93	3.00	34.77	PASS
		1	24		21.85	8	27.70	3.00	34.77	PASS
		12	0		21.76	8	27.61	3.00	34.77	PASS
		12	6		21.73	8	27.58	3.00	34.77	PASS
		12	11		21.52	8	27.37	3.00	34.77	PASS
		25	0		21.48	8	27.33	3.00	34.77	PASS
	Middle	1	0	QPSK	22.18	8	28.03	3.00	34.77	PASS
		1	12		22.06	8	27.91	3.00	34.77	PASS
		1	24		21.90	8	27.75	3.00	34.77	PASS
		12	0		21.78	8	27.63	3.00	34.77	PASS
		12	6		21.75	8	27.60	3.00	34.77	PASS
		12	11		21.57	8	27.42	3.00	34.77	PASS
		25	0		21.44	8	27.29	3.00	34.77	PASS
		1	0	16QAM	22.02	8	27.87	3.00	34.77	PASS
		1	12		21.91	8	27.76	3.00	34.77	PASS
		1	24		21.77	8	27.62	3.00	34.77	PASS
		12	0		21.60	8	27.45	3.00	34.77	PASS
		12	6		21.64	8	27.49	3.00	34.77	PASS
		12	11		21.44	8	27.29	3.00	34.77	PASS
		25	0		21.32	8	27.17	3.00	34.77	PASS
	Highest	1	0	QPSK	22.25	8	28.10	3.00	34.77	PASS
		1	12		22.07	8	27.92	3.00	34.77	PASS
		1	24		22.05	8	27.90	3.00	34.77	PASS
		12	0		21.86	8	27.71	3.00	34.77	PASS
		12	6		21.82	8	27.67	3.00	34.77	PASS
		12	11		21.78	8	27.63	3.00	34.77	PASS
		25	0		21.67	8	27.52	3.00	34.77	PASS
		1	0	16QAM	22.15	8	28.00	3.00	34.77	PASS
		1	12		22.07	8	27.92	3.00	34.77	PASS
		1	24		21.86	8	27.71	3.00	34.77	PASS
		12	0		21.75	8	27.60	3.00	34.77	PASS
		12	6		21.63	8	27.48	3.00	34.77	PASS
		12	11		21.77	8	27.62	3.00	34.77	PASS
		25	0		21.65	8	27.50	3.00	34.77	PASS

Radiated Power (ERP) for LTE Band 13 /10M										
BW (MHz)	UL Channel	RB Size	RB offset	Modulation	Conduction AVG Power(dBm)	Ant Gain（dBi）	ERP (dBm)	ERP Limit(W)	ERP Limit(dBm)	Verdict
10	Middle	1	0	QPSK	22.43	8	28.28	3.00	34.77	PASS
		1	24		22.24	8	28.09	3.00	34.77	PASS
		1	49		22.23	8	28.08	3.00	34.77	PASS
		25	0		22.05	8	27.90	3.00	34.77	PASS
		25	12		22.02	8	27.87	3.00	34.77	PASS
		25	24		21.83	8	27.68	3.00	34.77	PASS
		50	0		21.78	8	27.63	3.00	34.77	PASS

Radiated Power (EIRP) for LTE Band 25 /1.4M										
BW (MHz)	UL Channel	RB Size	RB offset	Modulation	Conduction AVG Power(dBm)	Ant Gain（dBi）	EIRP (dBm)	EIRP Limit(W)	EIRP Limit(dBm)	Verdict
1.4	Lowest	1	0	QPSK	22.73	8	30.73	2.00	33.01	PASS
		1	2		22.62	8	30.62	2.00	33.01	PASS
		1	5		22.55	8	30.55	2.00	33.01	PASS
		3	0		22.41	8	30.41	2.00	33.01	PASS
		3	1		22.39	8	30.39	2.00	33.01	PASS
		3	2		22.34	8	30.34	2.00	33.01	PASS
		6	0		22.19	8	30.19	2.00	33.01	PASS
		1	0	16QAM	22.63	8	30.63	2.00	33.01	PASS
		1	2		22.56	8	30.56	2.00	33.01	PASS
		1	5		22.43	8	30.43	2.00	33.01	PASS
		3	0		22.40	8	30.40	2.00	33.01	PASS
		3	1		22.24	8	30.24	2.00	33.01	PASS
		3	2		22.22	8	30.22	2.00	33.01	PASS
		6	0		22.05	8	30.05	2.00	33.01	PASS
	Middle	1	0	QPSK	22.53	8	30.53	2.00	33.01	PASS
		1	2		22.46	8	30.46	2.00	33.01	PASS
		1	5		22.35	8	30.35	2.00	33.01	PASS
		3	0		22.29	8	30.29	2.00	33.01	PASS
		3	1		22.15	8	30.15	2.00	33.01	PASS
		3	2		22.02	8	30.02	2.00	33.01	PASS
		6	0		21.83	8	29.83	2.00	33.01	PASS
		1	0	16QAM	22.37	8	30.37	2.00	33.01	PASS
		1	2		22.28	8	30.28	2.00	33.01	PASS
		1	5		22.21	8	30.21	2.00	33.01	PASS
		3	0		22.27	8	30.27	2.00	33.01	PASS
		3	1		22.06	8	30.06	2.00	33.01	PASS
		3	2		21.91	8	29.91	2.00	33.01	PASS
		6	0		21.72	8	29.72	2.00	33.01	PASS
	Highest	1	0	QPSK	22.68	8	30.68	2.00	33.01	PASS
		1	2		22.55	8	30.55	2.00	33.01	PASS
		1	5		22.44	8	30.44	2.00	33.01	PASS
		3	0		22.27	8	30.27	2.00	33.01	PASS
		3	1		22.13	8	30.13	2.00	33.01	PASS
		3	2		22.09	8	30.09	2.00	33.01	PASS
		6	0		21.96	8	29.96	2.00	33.01	PASS
		1	0	16QAM	22.55	8	30.55	2.00	33.01	PASS
		1	2		22.52	8	30.52	2.00	33.01	PASS
		1	5		22.29	8	30.29	2.00	33.01	PASS
		3	0		22.18	8	30.18	2.00	33.01	PASS
		3	1		21.97	8	29.97	2.00	33.01	PASS
		3	2		21.95	8	29.95	2.00	33.01	PASS
		6	0		21.77	8	29.77	2.00	33.01	PASS

Radiated Power (EIRP) for LTE Band 25 /3M										
BW (MHz)	UL Channel	RB Size	RB offset	Modulation	Conduction AVG Power(dBm)	Ant Gain（dBi）	EIRP (dBm)	EIRP Limit(W)	EIRP Limit(dBm)	Verdict
3	Lowest	1	0	QPSK	22.62	8	30.62	2.00	33.01	PASS
		1	7		22.56	8	30.56	2.00	33.01	PASS
		1	14		22.48	8	30.48	2.00	33.01	PASS
		8	0		22.31	8	30.31	2.00	33.01	PASS
		8	4		22.25	8	30.25	2.00	33.01	PASS
		8	7		22.17	8	30.17	2.00	33.01	PASS
		15	0		22.01	8	30.01	2.00	33.01	PASS
		1	0	16QAM	22.53	8	30.53	2.00	33.01	PASS
		1	7		22.36	8	30.36	2.00	33.01	PASS
		1	14		22.32	8	30.32	2.00	33.01	PASS
		8	0		22.27	8	30.27	2.00	33.01	PASS
		8	4		22.13	8	30.13	2.00	33.01	PASS
		8	7		22.00	8	30.00	2.00	33.01	PASS
		15	0		21.97	8	29.97	2.00	33.01	PASS
	Middle	1	0	QPSK	22.60	8	30.60	2.00	33.01	PASS
		1	7		22.46	8	30.46	2.00	33.01	PASS
		1	14		22.43	8	30.43	2.00	33.01	PASS
		8	0		22.41	8	30.41	2.00	33.01	PASS
		8	4		22.41	8	30.41	2.00	33.01	PASS
		8	7		22.30	8	30.30	2.00	33.01	PASS
		15	0		22.16	8	30.16	2.00	33.01	PASS
		1	0	16QAM	22.48	8	30.48	2.00	33.01	PASS
		1	7		22.42	8	30.42	2.00	33.01	PASS
		1	14		22.36	8	30.36	2.00	33.01	PASS
		8	0		22.31	8	30.31	2.00	33.01	PASS
		8	4		22.37	8	30.37	2.00	33.01	PASS
		8	7		22.23	8	30.23	2.00	33.01	PASS
		15	0		22.05	8	30.05	2.00	33.01	PASS
	Highest	1	0	QPSK	22.71	8	30.71	2.00	33.01	PASS
		1	7		22.58	8	30.58	2.00	33.01	PASS
		1	14		22.40	8	30.40	2.00	33.01	PASS
		8	0		22.40	8	30.40	2.00	33.01	PASS
		8	4		22.20	8	30.20	2.00	33.01	PASS
		8	7		22.19	8	30.19	2.00	33.01	PASS
		15	0		22.03	8	30.03	2.00	33.01	PASS
		1	0	16QAM	22.66	8	30.66	2.00	33.01	PASS
		1	7		22.42	8	30.42	2.00	33.01	PASS
		1	14		22.26	8	30.26	2.00	33.01	PASS
		8	0		22.39	8	30.39	2.00	33.01	PASS
		8	4		22.04	8	30.04	2.00	33.01	PASS
		8	7		22.05	8	30.05	2.00	33.01	PASS
		15	0		22.00	8	30.00	2.00	33.01	PASS

Radiated Power (EIRP) for LTE Band 25 /5M										
BW (MHz)	UL Channel	RB Size	RB offset	Modulation	Conduction AVG Power(dBm)	Ant Gain（dBi）	EIRP (dBm)	EIRP Limit(W)	EIRP Limit(dBm)	Verdict
5	Lowest	1	0	QPSK	22.82	8	30.82	2.00	33.01	PASS
		1	12		22.67	8	30.67	2.00	33.01	PASS
		1	24		22.57	8	30.57	2.00	33.01	PASS
		12	0		22.42	8	30.42	2.00	33.01	PASS
		12	6		22.35	8	30.35	2.00	33.01	PASS
		12	11		22.18	8	30.18	2.00	33.01	PASS
		25	0		21.99	8	29.99	2.00	33.01	PASS
		1	0	16QAM	22.70	8	30.70	2.00	33.01	PASS
		1	12		22.57	8	30.57	2.00	33.01	PASS
		1	24		22.46	8	30.46	2.00	33.01	PASS
		12	0		22.28	8	30.28	2.00	33.01	PASS
		12	6		22.24	8	30.24	2.00	33.01	PASS
		12	11		22.07	8	30.07	2.00	33.01	PASS
		25	0		21.92	8	29.92	2.00	33.01	PASS
	Middle	1	0	QPSK	22.75	8	30.75	2.00	33.01	PASS
		1	12		22.66	8	30.66	2.00	33.01	PASS
		1	24		22.47	8	30.47	2.00	33.01	PASS
		12	0		22.43	8	30.43	2.00	33.01	PASS
		12	6		22.41	8	30.41	2.00	33.01	PASS
		12	11		22.39	8	30.39	2.00	33.01	PASS
		25	0		22.20	8	30.20	2.00	33.01	PASS
		1	0	16QAM	22.69	8	30.69	2.00	33.01	PASS
		1	12		22.50	8	30.50	2.00	33.01	PASS
		1	24		22.28	8	30.28	2.00	33.01	PASS
		12	0		22.28	8	30.28	2.00	33.01	PASS
		12	6		22.36	8	30.36	2.00	33.01	PASS
		12	11		22.22	8	30.22	2.00	33.01	PASS
		25	0		22.06	8	30.06	2.00	33.01	PASS
	Highest	1	0	QPSK	22.71	8	30.71	2.00	33.01	PASS
		1	12		22.51	8	30.51	2.00	33.01	PASS
		1	24		22.43	8	30.43	2.00	33.01	PASS
		12	0		22.38	8	30.38	2.00	33.01	PASS
		12	6		22.35	8	30.35	2.00	33.01	PASS
		12	11		22.30	8	30.30	2.00	33.01	PASS
		25	0		22.13	8	30.13	2.00	33.01	PASS
		1	0	16QAM	22.52	8	30.52	2.00	33.01	PASS
		1	12		22.38	8	30.38	2.00	33.01	PASS
		1	24		22.29	8	30.29	2.00	33.01	PASS
		12	0		22.29	8	30.29	2.00	33.01	PASS
		12	6		22.23	8	30.23	2.00	33.01	PASS
		12	11		22.27	8	30.27	2.00	33.01	PASS
		25	0		22.05	8	30.05	2.00	33.01	PASS

Radiated Power (EIRP) for LTE Band 25 /10M										
BW (MHz)	UL Channel	RB Size	RB offset	Modulation	Conduction AVG Power(dBm)	Ant Gain（dBi）	EIRP (dBm)	EIRP Limit(W)	EIRP Limit(dBm)	Verdict
10	Lowest	1	0	QPSK	22.94	8	30.94	2.00	33.01	PASS
		1	24		22.93	8	30.93	2.00	33.01	PASS
		1	49		22.85	8	30.85	2.00	33.01	PASS
		25	0		22.73	8	30.73	2.00	33.01	PASS
		25	12		22.67	8	30.67	2.00	33.01	PASS
		25	24		22.58	8	30.58	2.00	33.01	PASS
		50	0		22.44	8	30.44	2.00	33.01	PASS
	Middle	1	0	QPSK	22.88	8	30.88	2.00	33.01	PASS
		1	24		22.75	8	30.75	2.00	33.01	PASS
		1	49		22.70	8	30.70	2.00	33.01	PASS
		25	0		22.62	8	30.62	2.00	33.01	PASS
		25	12		22.44	8	30.44	2.00	33.01	PASS
		25	24		22.30	8	30.30	2.00	33.01	PASS
		50	0		22.17	8	30.17	2.00	33.01	PASS
	Highest	1	0	QPSK	22.91	8	30.91	2.00	33.01	PASS
		1	24		22.78	8	30.78	2.00	33.01	PASS
		1	49		22.69	8	30.69	2.00	33.01	PASS
		25	0		22.60	8	30.60	2.00	33.01	PASS
		25	12		22.52	8	30.52	2.00	33.01	PASS
		25	24		22.34	8	30.34	2.00	33.01	PASS
		50	0		22.19	8	30.19	2.00	33.01	PASS

Radiated Power (EIRP) for LTE Band 25 /15M										
BW (MHz)	UL Channel	RB Size	RB offset	Modulation	Conduction AVG Power(dBm)	Ant Gain（dBi）	EIRP (dBm)	EIRP Limit(W)	EIRP Limit(dBm)	Verdict
15	Lowest	1	0	QPSK	23.01	8	31.01	2.00	33.01	PASS
		1	37		22.89	8	30.89	2.00	33.01	PASS
		1	74		22.77	8	30.77	2.00	33.01	PASS
		36	0		22.76	8	30.76	2.00	33.01	PASS
		36	18		22.57	8	30.57	2.00	33.01	PASS
		36	39		22.44	8	30.44	2.00	33.01	PASS
		75	0		22.27	8	30.27	2.00	33.01	PASS
	Middle	1	0	QPSK	23.04	8	31.04	2.00	33.01	PASS
		1	37		22.85	8	30.85	2.00	33.01	PASS
		1	74		22.74	8	30.74	2.00	33.01	PASS
		36	0		22.68	8	30.68	2.00	33.01	PASS
		36	18		22.67	8	30.67	2.00	33.01	PASS
		36	39		22.47	8	30.47	2.00	33.01	PASS
		75	0		22.46	8	30.46	2.00	33.01	PASS
	Highest	1	0	QPSK	23.10	8	31.10	2.00	33.01	PASS
		1	37		23.08	8	31.08	2.00	33.01	PASS
		1	74		22.96	8	30.96	2.00	33.01	PASS
		36	0		22.95	8	30.95	2.00	33.01	PASS
		36	18		22.76	8	30.76	2.00	33.01	PASS
		36	39		22.67	8	30.67	2.00	33.01	PASS
		75	0		22.65	8	30.65	2.00	33.01	PASS

Radiated Power (EIRP) for LTE Band 25 /20M										
BW (MHz)	UL Channel	RB Size	RB offset	Modulation	Conduction AVG Power(dBm)	Ant Gain（dBi）	EIRP (dBm)	EIRP Limit(W)	EIRP Limit(dBm)	Verdict
20	Lowest	1	0	QPSK	23.15	8	31.15	2.00	33.01	PASS
		1	49		23.14	8	31.14	2.00	33.01	PASS
		1	99		23.04	8	31.04	2.00	33.01	PASS
		50	0		22.90	8	30.90	2.00	33.01	PASS
		50	24		22.86	8	30.86	2.00	33.01	PASS
		50	49		22.84	8	30.84	2.00	33.01	PASS
		100	0		22.74	8	30.74	2.00	33.01	PASS
	Middle	1	0	QPSK	23.12	8	31.12	2.00	33.01	PASS
		1	49		23.02	8	31.02	2.00	33.01	PASS
		1	99		22.95	8	30.95	2.00	33.01	PASS
		50	0		22.79	8	30.79	2.00	33.01	PASS
		50	24		22.64	8	30.64	2.00	33.01	PASS
		50	49		22.51	8	30.51	2.00	33.01	PASS
		100	0		22.39	8	30.39	2.00	33.01	PASS
	Highest	1	0	QPSK	23.08	8	31.08	2.00	33.01	PASS
		1	49		22.89	8	30.89	2.00	33.01	PASS
		1	99		22.71	8	30.71	2.00	33.01	PASS
		50	0		22.58	8	30.58	2.00	33.01	PASS
		50	24		22.38	8	30.38	2.00	33.01	PASS
		50	49		22.18	8	30.18	2.00	33.01	PASS
		100	0		22.18	8	30.18	2.00	33.01	PASS

Radiated Power (ERP) for LTE Band 26(Part 22) /1.4M										
BW (MHz)	UL Channel	RB Size	RB offset	Modulation	Conduction AVG Power(dBm)	Ant Gain（dBi）	ERP (dBm)	ERP Limit(W)	ERP Limit(dBm)	Verdict
1.4	Lowest	1	0	QPSK	23.22	8	29.07	7.00	38.45	PASS
		1	2		23.17	8	29.02	7.00	38.45	PASS
		1	5		23.07	8	28.92	7.00	38.45	PASS
		3	0		23.04	8	28.89	7.00	38.45	PASS
		3	1		22.98	8	28.83	7.00	38.45	PASS
		3	2		22.91	8	28.76	7.00	38.45	PASS
		6	0		22.88	8	28.73	7.00	38.45	PASS
		1	0	16QAM	23.19	8	29.04	7.00	38.45	PASS
		1	2		23.11	8	28.96	7.00	38.45	PASS
		1	5		22.97	8	28.82	7.00	38.45	PASS
		3	0		22.90	8	28.75	7.00	38.45	PASS
		3	1		22.88	8	28.73	7.00	38.45	PASS
		3	2		22.85	8	28.70	7.00	38.45	PASS
		6	0		22.80	8	28.65	7.00	38.45	PASS
	Middle	1	0	QPSK	23.18	8	29.03	7.00	38.45	PASS
		1	2		23.05	8	28.90	7.00	38.45	PASS
		1	5		22.94	8	28.79	7.00	38.45	PASS
		3	0		22.93	8	28.78	7.00	38.45	PASS
		3	1		22.92	8	28.77	7.00	38.45	PASS
		3	2		22.74	8	28.59	7.00	38.45	PASS
		6	0		22.63	8	28.48	7.00	38.45	PASS
		1	0	16QAM	22.99	8	28.84	7.00	38.45	PASS
		1	2		23.01	8	28.86	7.00	38.45	PASS
		1	5		22.86	8	28.71	7.00	38.45	PASS
		3	0		22.85	8	28.70	7.00	38.45	PASS
		3	1		22.77	8	28.62	7.00	38.45	PASS
		3	2		22.57	8	28.42	7.00	38.45	PASS
		6	0		22.60	8	28.45	7.00	38.45	PASS
	Highest	1	0	QPSK	23.31	8	29.16	7.00	38.45	PASS
		1	2		23.14	8	28.99	7.00	38.45	PASS
		1	5		23.09	8	28.94	7.00	38.45	PASS
		3	0		23.05	8	28.90	7.00	38.45	PASS
		3	1		22.99	8	28.84	7.00	38.45	PASS
		3	2		22.87	8	28.72	7.00	38.45	PASS
		6	0		22.74	8	28.59	7.00	38.45	PASS
		1	0	16QAM	23.11	8	28.96	7.00	38.45	PASS
		1	2		23.08	8	28.93	7.00	38.45	PASS
		1	5		23.07	8	28.92	7.00	38.45	PASS
		3	0		22.98	8	28.83	7.00	38.45	PASS
		3	1		22.93	8	28.78	7.00	38.45	PASS
		3	2		22.74	8	28.59	7.00	38.45	PASS
		6	0		22.71	8	28.56	7.00	38.45	PASS

Radiated Power (ERP) for LTE Band 26(Part 22) /3M										
BW (MHz)	UL Channel	RB Size	RB offset	Modulation	Conduction AVG Power(dBm)	Ant Gain（dBi）	ERP (dBm)	ERP Limit(W)	ERP Limit(dBm)	Verdict
3	Lowest	1	0	QPSK	23.41	8	29.26	7.00	38.45	PASS
		1	7		23.29	8	29.14	7.00	38.45	PASS
		1	14		23.17	8	29.02	7.00	38.45	PASS
		8	0		23.17	8	29.02	7.00	38.45	PASS
		8	4		23.04	8	28.89	7.00	38.45	PASS
		8	7		22.94	8	28.79	7.00	38.45	PASS
		15	0		22.77	8	28.62	7.00	38.45	PASS
		1	0	16QAM	23.31	8	29.16	7.00	38.45	PASS
		1	7		23.28	8	29.13	7.00	38.45	PASS
		1	14		23.17	8	29.02	7.00	38.45	PASS
		8	0		23.16	8	29.01	7.00	38.45	PASS
		8	4		22.95	8	28.80	7.00	38.45	PASS
		8	7		22.74	8	28.59	7.00	38.45	PASS
		15	0		22.63	8	28.48	7.00	38.45	PASS
	Middle	1	0	QPSK	23.44	8	29.29	7.00	38.45	PASS
		1	7		23.31	8	29.16	7.00	38.45	PASS
		1	14		23.12	8	28.97	7.00	38.45	PASS
		8	0		22.95	8	28.80	7.00	38.45	PASS
		8	4		22.95	8	28.80	7.00	38.45	PASS
		8	7		22.83	8	28.68	7.00	38.45	PASS
		15	0		22.69	8	28.54	7.00	38.45	PASS
		1	0	16QAM	23.32	8	29.17	7.00	38.45	PASS
		1	7		23.17	8	29.02	7.00	38.45	PASS
		1	14		22.96	8	28.81	7.00	38.45	PASS
		8	0		22.91	8	28.76	7.00	38.45	PASS
		8	4		22.84	8	28.69	7.00	38.45	PASS
		8	7		22.71	8	28.56	7.00	38.45	PASS
		15	0		22.56	8	28.41	7.00	38.45	PASS
	Highest	1	0	QPSK	23.31	8	29.16	7.00	38.45	PASS
		1	7		23.27	8	29.12	7.00	38.45	PASS
		1	14		23.19	8	29.04	7.00	38.45	PASS
		8	0		23.18	8	29.03	7.00	38.45	PASS
		8	4		23.14	8	28.99	7.00	38.45	PASS
		8	7		22.96	8	28.81	7.00	38.45	PASS
		15	0		22.89	8	28.74	7.00	38.45	PASS
		1	0	16QAM	23.16	8	29.01	7.00	38.45	PASS
		1	7		23.07	8	28.92	7.00	38.45	PASS
		1	14		23.04	8	28.89	7.00	38.45	PASS
		8	0		23.14	8	28.99	7.00	38.45	PASS
		8	4		23.11	8	28.96	7.00	38.45	PASS
		8	7		22.82	8	28.67	7.00	38.45	PASS
		15	0		22.84	8	28.69	7.00	38.45	PASS

Radiated Power (ERP) for LTE Band 26(Part 22) /5M										
BW (MHz)	UL Channel	RB Size	RB offset	Modulation	Conduction AVG Power(dBm)	Ant Gain（dBi）	ERP (dBm)	ERP Limit(W)	ERP Limit(dBm)	Verdict
5	Lowest	1	0	QPSK	23.66	8	29.51	7.00	38.45	PASS
		1	12		23.55	8	29.40	7.00	38.45	PASS
		1	24		23.39	8	29.24	7.00	38.45	PASS
		12	0		23.37	8	29.22	7.00	38.45	PASS
		12	6		23.23	8	29.08	7.00	38.45	PASS
		12	11		23.08	8	28.93	7.00	38.45	PASS
		25	0		22.89	8	28.74	7.00	38.45	PASS
		1	0	16QAM	23.65	8	29.50	7.00	38.45	PASS
		1	12		23.37	8	29.22	7.00	38.45	PASS
		1	24		23.20	8	29.05	7.00	38.45	PASS
		12	0		23.36	8	29.21	7.00	38.45	PASS
		12	6		23.05	8	28.90	7.00	38.45	PASS
		12	11		23.05	8	28.90	7.00	38.45	PASS
		25	0		22.80	8	28.65	7.00	38.45	PASS
	Middle	1	0	QPSK	23.58	8	29.43	7.00	38.45	PASS
		1	12		23.41	8	29.26	7.00	38.45	PASS
		1	24		23.31	8	29.16	7.00	38.45	PASS
		12	0		23.11	8	28.96	7.00	38.45	PASS
		12	6		22.97	8	28.82	7.00	38.45	PASS
		12	11		22.87	8	28.72	7.00	38.45	PASS
		25	0		22.71	8	28.56	7.00	38.45	PASS
		1	0	16QAM	23.40	8	29.25	7.00	38.45	PASS
		1	12		23.38	8	29.23	7.00	38.45	PASS
		1	24		23.16	8	29.01	7.00	38.45	PASS
		12	0		23.02	8	28.87	7.00	38.45	PASS
		12	6		22.90	8	28.75	7.00	38.45	PASS
		12	11		22.73	8	28.58	7.00	38.45	PASS
		25	0		22.69	8	28.54	7.00	38.45	PASS
	Highest	1	0	QPSK	23.60	8	29.45	7.00	38.45	PASS
		1	12		23.41	8	29.26	7.00	38.45	PASS
		1	24		23.29	8	29.14	7.00	38.45	PASS
		12	0		23.17	8	29.02	7.00	38.45	PASS
		12	6		23.09	8	28.94	7.00	38.45	PASS
		12	11		22.93	8	28.78	7.00	38.45	PASS
		25	0		22.83	8	28.68	7.00	38.45	PASS
		1	0	16QAM	23.49	8	29.34	7.00	38.45	PASS
		1	12		23.34	8	29.19	7.00	38.45	PASS
		1	24		23.24	8	29.09	7.00	38.45	PASS
		12	0		23.02	8	28.87	7.00	38.45	PASS
		12	6		23.04	8	28.89	7.00	38.45	PASS
		12	11		22.82	8	28.67	7.00	38.45	PASS
		25	0		22.70	8	28.55	7.00	38.45	PASS

Radiated Power (ERP) for LTE Band 26(Part 22) /10M										
BW (MHz)	UL Channel	RB Size	RB offset	Modulation	Conduction AVG Power(dBm)	Ant Gain（dBi）	ERP (dBm)	ERP Limit(W)	ERP Limit(dBm)	Verdict
10	Lowest	1	0	QPSK	23.62	8	29.47	7.00	38.45	PASS
		1	24		23.57	8	29.42	7.00	38.45	PASS
		1	49		23.50	8	29.35	7.00	38.45	PASS
		25	0		23.38	8	29.23	7.00	38.45	PASS
		25	12		23.30	8	29.15	7.00	38.45	PASS
		25	24		23.18	8	29.03	7.00	38.45	PASS
		50	0		23.06	8	28.91	7.00	38.45	PASS
	Middle	1	0	QPSK	23.60	8	29.45	7.00	38.45	PASS
		1	24		23.57	8	29.42	7.00	38.45	PASS
		1	49		23.54	8	29.39	7.00	38.45	PASS
		25	0		23.41	8	29.26	7.00	38.45	PASS
		25	12		23.29	8	29.14	7.00	38.45	PASS
		25	24		23.09	8	28.94	7.00	38.45	PASS
		50	0		22.93	8	28.78	7.00	38.45	PASS
	Highest	1	0	QPSK	23.55	8	29.40	7.00	38.45	PASS
		1	24		23.49	8	29.34	7.00	38.45	PASS
		1	49		23.32	8	29.17	7.00	38.45	PASS
		25	0		23.22	8	29.07	7.00	38.45	PASS
		25	12		23.05	8	28.90	7.00	38.45	PASS
		25	24		22.93	8	28.78	7.00	38.45	PASS
		50	0		22.85	8	28.70	7.00	38.45	PASS

Radiated Power (ERP) for LTE Band 26(Part 22) /15M										
BW (MHz)	UL Channel	RB Size	RB offset	Modulation	Conduction AVG Power(dBm)	Ant Gain（dBi）	ERP (dBm)	ERP Limit(W)	ERP Limit(dBm)	Verdict
15	Lowest	1	0	QPSK	23.78	8	29.63	7.00	38.45	PASS
		1	24		23.60	8	29.45	7.00	38.45	PASS
		1	49		23.50	8	29.35	7.00	38.45	PASS
		25	0		23.43	8	29.28	7.00	38.45	PASS
		25	12		23.35	8	29.20	7.00	38.45	PASS
		25	24		23.22	8	29.07	7.00	38.45	PASS
		50	0		23.16	8	29.01	7.00	38.45	PASS
	Middle	1	0	QPSK	23.84	8	29.69	7.00	38.45	PASS
		1	24		23.67	8	29.52	7.00	38.45	PASS
		1	49		23.64	8	29.49	7.00	38.45	PASS
		25	0		23.44	8	29.29	7.00	38.45	PASS
		25	12		23.34	8	29.19	7.00	38.45	PASS
		25	24		23.18	8	29.03	7.00	38.45	PASS
		50	0		23.04	8	28.89	7.00	38.45	PASS
	Highest	1	0	QPSK	23.80	8	29.65	7.00	38.45	PASS
		1	24		23.72	8	29.57	7.00	38.45	PASS
		1	49		23.55	8	29.40	7.00	38.45	PASS
		25	0		23.51	8	29.36	7.00	38.45	PASS
		25	12		23.39	8	29.24	7.00	38.45	PASS
		25	24		23.38	8	29.23	7.00	38.45	PASS
		50	0		23.28	8	29.13	7.00	38.45	PASS

Radiated Power (ERP) for LTE Band 26(Part 90) /1.4M										
BW (MHz)	UL Channel	RB Size	RB offset	Modulation	Conduction AVG Power(dBm)	Ant Gain（dBi）	ERP (dBm)	ERP Limit(W)	ERP Limit(dBm)	Verdict
1.4	Lowest	1	0	QPSK	22.61	8	28.46	100.00	50.00	PASS
		1	2		22.52	8	28.37	100.00	50.00	PASS
		1	5		22.51	8	28.36	100.00	50.00	PASS
		3	0		22.42	8	28.27	100.00	50.00	PASS
		3	1		22.34	8	28.19	100.00	50.00	PASS
		3	2		22.29	8	28.14	100.00	50.00	PASS
		6	0		22.14	8	27.99	100.00	50.00	PASS
		1	0	16QAM	22.57	8	28.42	100.00	50.00	PASS
		1	2		22.39	8	28.24	100.00	50.00	PASS
		1	5		22.33	8	28.18	100.00	50.00	PASS
		3	0		22.28	8	28.13	100.00	50.00	PASS
		3	1		22.14	8	27.99	100.00	50.00	PASS
		3	2		22.11	8	27.96	100.00	50.00	PASS
		6	0		22.00	8	27.85	100.00	50.00	PASS
	Middle	1	0	QPSK	22.56	8	28.41	100.00	50.00	PASS
		1	2		22.52	8	28.37	100.00	50.00	PASS
		1	5		22.52	8	28.37	100.00	50.00	PASS
		3	0		22.47	8	28.32	100.00	50.00	PASS
		3	1		22.47	8	28.32	100.00	50.00	PASS
		3	2		22.32	8	28.17	100.00	50.00	PASS
		6	0		22.21	8	28.06	100.00	50.00	PASS
		1	0	16QAM	22.41	8	28.26	100.00	50.00	PASS
		1	2		22.50	8	28.35	100.00	50.00	PASS
		1	5		22.35	8	28.20	100.00	50.00	PASS
		3	0		22.33	8	28.18	100.00	50.00	PASS
		3	1		22.28	8	28.13	100.00	50.00	PASS
		3	2		22.24	8	28.09	100.00	50.00	PASS
		6	0		22.17	8	28.02	100.00	50.00	PASS
	Highest	1	0	QPSK	22.48	8	28.33	100.00	50.00	PASS
		1	2		22.46	8	28.31	100.00	50.00	PASS
		1	5		22.40	8	28.25	100.00	50.00	PASS
		3	0		22.26	8	28.11	100.00	50.00	PASS
		3	1		22.09	8	27.94	100.00	50.00	PASS
		3	2		21.97	8	27.82	100.00	50.00	PASS
		6	0		21.90	8	27.75	100.00	50.00	PASS
		1	0	16QAM	22.46	8	28.31	100.00	50.00	PASS
		1	2		22.27	8	28.12	100.00	50.00	PASS
		1	5		22.31	8	28.16	100.00	50.00	PASS
		3	0		22.07	8	27.92	100.00	50.00	PASS
		3	1		21.90	8	27.75	100.00	50.00	PASS
		3	2		21.81	8	27.66	100.00	50.00	PASS
		6	0		21.74	8	27.59	100.00	50.00	PASS

Radiated Power (ERP) for LTE Band 26(Part 90) /3M										
BW (MHz)	UL Channel	RB Size	RB offset	Modulation	Conduction AVG Power(dBm)	Ant Gain（dBi）	ERP (dBm)	ERP Limit(W)	ERP Limit(dBm)	Verdict
3	Lowest	1	0	QPSK	22.85	8	28.70	100.00	50.00	PASS
		1	7		22.75	8	28.60	100.00	50.00	PASS
		1	14		22.68	8	28.53	100.00	50.00	PASS
		8	0		22.63	8	28.48	100.00	50.00	PASS
		8	4		22.50	8	28.35	100.00	50.00	PASS
		8	7		22.47	8	28.32	100.00	50.00	PASS
		15	0		22.38	8	28.23	100.00	50.00	PASS
		1	0	16QAM	22.82	8	28.67	100.00	50.00	PASS
		1	7		22.73	8	28.58	100.00	50.00	PASS
		1	14		22.57	8	28.42	100.00	50.00	PASS
		8	0		22.48	8	28.33	100.00	50.00	PASS
		8	4		22.38	8	28.23	100.00	50.00	PASS
		8	7		22.38	8	28.23	100.00	50.00	PASS
		15	0		22.20	8	28.05	100.00	50.00	PASS
	Middle	1	0	QPSK	22.91	8	28.76	100.00	50.00	PASS
		1	7		22.81	8	28.66	100.00	50.00	PASS
		1	14		22.73	8	28.58	100.00	50.00	PASS
		8	0		22.63	8	28.48	100.00	50.00	PASS
		8	4		22.47	8	28.32	100.00	50.00	PASS
		8	7		22.36	8	28.21	100.00	50.00	PASS
		15	0		22.17	8	28.02	100.00	50.00	PASS
		1	0	16QAM	22.86	8	28.71	100.00	50.00	PASS
		1	7		22.70	8	28.55	100.00	50.00	PASS
		1	14		22.65	8	28.50	100.00	50.00	PASS
		8	0		22.49	8	28.34	100.00	50.00	PASS
		8	4		22.41	8	28.26	100.00	50.00	PASS
		8	7		22.27	8	28.12	100.00	50.00	PASS
		15	0		22.13	8	27.98	100.00	50.00	PASS
	Highest	1	0	QPSK	22.75	8	28.60	100.00	50.00	PASS
		1	7		22.73	8	28.58	100.00	50.00	PASS
		1	14		22.56	8	28.41	100.00	50.00	PASS
		8	0		22.51	8	28.36	100.00	50.00	PASS
		8	4		22.39	8	28.24	100.00	50.00	PASS
		8	7		22.38	8	28.23	100.00	50.00	PASS
		15	0		22.34	8	28.19	100.00	50.00	PASS
		1	0	16QAM	22.61	8	28.46	100.00	50.00	PASS
		1	7		22.60	8	28.45	100.00	50.00	PASS
		1	14		22.49	8	28.34	100.00	50.00	PASS
		8	0		22.48	8	28.33	100.00	50.00	PASS
		8	4		22.24	8	28.09	100.00	50.00	PASS
		8	7		22.32	8	28.17	100.00	50.00	PASS
		15	0		22.17	8	28.02	100.00	50.00	PASS

Radiated Power (ERP) for LTE 26(Part 90) /5M										
BW (MHz)	UL Channel	RB Size	RB offset	Modulation	Conduction AVG Power(dBm)	Ant Gain（dBi）	ERP (dBm)	ERP Limit(W)	ERP Limit(dBm)	Verdict
5	Lowest	1	0	QPSK	23.01	8	28.86	100.00	50.00	PASS
		1	12		22.90	8	28.75	100.00	50.00	PASS
		1	24		22.77	8	28.62	100.00	50.00	PASS
		12	0		22.77	8	28.62	100.00	50.00	PASS
		12	6		22.62	8	28.47	100.00	50.00	PASS
		12	11		22.46	8	28.31	100.00	50.00	PASS
		25	0		22.28	8	28.13	100.00	50.00	PASS
		1	0	16QAM	22.81	8	28.66	100.00	50.00	PASS
		1	12		22.82	8	28.67	100.00	50.00	PASS
		1	24		22.61	8	28.46	100.00	50.00	PASS
		12	0		22.63	8	28.48	100.00	50.00	PASS
		12	6		22.43	8	28.28	100.00	50.00	PASS
		12	11		22.43	8	28.28	100.00	50.00	PASS
		25	0		22.10	8	27.95	100.00	50.00	PASS
	Middle	1	0	QPSK	23.05	8	28.90	100.00	50.00	PASS
		1	12		22.97	8	28.82	100.00	50.00	PASS
		1	24		22.85	8	28.70	100.00	50.00	PASS
		12	0		22.69	8	28.54	100.00	50.00	PASS
		12	6		22.59	8	28.44	100.00	50.00	PASS
		12	11		22.55	8	28.40	100.00	50.00	PASS
		25	0		22.46	8	28.31	100.00	50.00	PASS
		1	0	16QAM	23.04	8	28.89	100.00	50.00	PASS
		1	12		22.86	8	28.71	100.00	50.00	PASS
		1	24		22.65	8	28.50	100.00	50.00	PASS
		12	0		22.58	8	28.43	100.00	50.00	PASS
		12	6		22.49	8	28.34	100.00	50.00	PASS
		12	11		22.45	8	28.30	100.00	50.00	PASS
		25	0		22.36	8	28.21	100.00	50.00	PASS
	Highest	1	0	QPSK	23.08	8	28.93	100.00	50.00	PASS
		1	12		22.92	8	28.77	100.00	50.00	PASS
		1	24		22.81	8	28.66	100.00	50.00	PASS
		12	0		22.68	8	28.53	100.00	50.00	PASS
		12	6		22.54	8	28.39	100.00	50.00	PASS
		12	11		22.45	8	28.30	100.00	50.00	PASS
		25	0		22.30	8	28.15	100.00	50.00	PASS
		1	0	16QAM	23.07	8	28.92	100.00	50.00	PASS
		1	12		22.78	8	28.63	100.00	50.00	PASS
		1	24		22.80	8	28.65	100.00	50.00	PASS
		12	0		22.62	8	28.47	100.00	50.00	PASS
		12	6		22.47	8	28.32	100.00	50.00	PASS
		12	11		22.38	8	28.23	100.00	50.00	PASS
		25	0		22.27	8	28.12	100.00	50.00	PASS

Radiated Power (ERP) for LTE 26(Part 90) /10M										
BW (MHz)	UL Channel	RB Size	RB offset	Modulation	Conduction AVG Power(dBm)	Ant Gain（dBi）	ERP (dBm)	ERP Limit(W)	ERP Limit(dBm)	Verdict
10	Middle	1	0	QPSK	23.12	8	28.97	100.00	50.00	PASS
		1	24		23.10	8	28.95	100.00	50.00	PASS
		1	49		22.90	8	28.75	100.00	50.00	PASS
		25	0		22.76	8	28.61	100.00	50.00	PASS
		25	12		22.61	8	28.46	100.00	50.00	PASS
		25	24		22.54	8	28.39	100.00	50.00	PASS
		50	0		22.40	8	28.25	100.00	50.00	PASS

Radiated Power (EIRP) for LTE Band 41 /5M										
BW (MHz)	UL Channel	RB Size	RB offset	Modulation	Conduction AVG Power(dBm)	Ant Gain（dBi）	EIRP (dBm)	EIRP Limit(W)	EIRP Limit(dBm)	Verdict
5	Lowest	1	0	QPSK	21.97	8	29.97	2.00	33.01	PASS
		1	12		21.88	8	29.88	2.00	33.01	PASS
		1	24		21.88	8	29.88	2.00	33.01	PASS
		12	0		21.80	8	29.80	2.00	33.01	PASS
		12	6		21.64	8	29.64	2.00	33.01	PASS
		12	11		21.57	8	29.57	2.00	33.01	PASS
		25	0		21.56	8	29.56	2.00	33.01	PASS
		1	0	16QAM	21.81	8	29.81	2.00	33.01	PASS
		1	12		21.83	8	29.83	2.00	33.01	PASS
		1	24		21.75	8	29.75	2.00	33.01	PASS
		12	0		21.79	8	29.79	2.00	33.01	PASS
		12	6		21.59	8	29.59	2.00	33.01	PASS
		12	11		21.50	8	29.50	2.00	33.01	PASS
		25	0		21.55	8	29.55	2.00	33.01	PASS
	Middle	1	0	QPSK	21.83	8	29.83	2.00	33.01	PASS
		1	12		21.72	8	29.72	2.00	33.01	PASS
		1	24		21.55	8	29.55	2.00	33.01	PASS
		12	0		21.45	8	29.45	2.00	33.01	PASS
		12	6		21.30	8	29.30	2.00	33.01	PASS
		12	11		21.30	8	29.30	2.00	33.01	PASS
		25	0		21.15	8	29.15	2.00	33.01	PASS
		1	0	16QAM	21.79	8	29.79	2.00	33.01	PASS
		1	12		21.67	8	29.67	2.00	33.01	PASS
		1	24		21.53	8	29.53	2.00	33.01	PASS
		12	0		21.44	8	29.44	2.00	33.01	PASS
		12	6		21.18	8	29.18	2.00	33.01	PASS
		12	11		21.13	8	29.13	2.00	33.01	PASS
		25	0		21.02	8	29.02	2.00	33.01	PASS
	Highest	1	0	QPSK	21.75	8	29.75	2.00	33.01	PASS
		1	12		21.55	8	29.55	2.00	33.01	PASS
		1	24		21.39	8	29.39	2.00	33.01	PASS
		12	0		21.28	8	29.28	2.00	33.01	PASS
		12	6		21.19	8	29.19	2.00	33.01	PASS
		12	11		21.14	8	29.14	2.00	33.01	PASS
		25	0		21.02	8	29.02	2.00	33.01	PASS
		1	0	16QAM	21.61	8	29.61	2.00	33.01	PASS
		1	12		21.51	8	29.51	2.00	33.01	PASS
		1	24		21.33	8	29.33	2.00	33.01	PASS
		12	0		21.09	8	29.09	2.00	33.01	PASS
		12	6		21.13	8	29.13	2.00	33.01	PASS
		12	11		20.98	8	28.98	2.00	33.01	PASS
		25	0		20.94	8	28.94	2.00	33.01	PASS

Radiated Power (EIRP) for LTE Band 41 /10M										
BW (MHz)	UL Channel	RB Size	RB offset	Modulation	Conduction AVG Power(dBm)	Ant Gain（dBi）	EIRP (dBm)	EIRP Limit(W)	EIRP Limit(dBm)	Verdict
10	Lowest	1	0	QPSK	22.15	8	30.15	2.00	33.01	PASS
		1	24		21.99	8	29.99	2.00	33.01	PASS
		1	49		21.84	8	29.84	2.00	33.01	PASS
		25	0		21.70	8	29.70	2.00	33.01	PASS
		25	12		21.57	8	29.57	2.00	33.01	PASS
		25	24		21.46	8	29.46	2.00	33.01	PASS
		50	0		21.31	8	29.31	2.00	33.01	PASS
	Middle	1	0	QPSK	22.07	8	30.07	2.00	33.01	PASS
		1	24		22.02	8	30.02	2.00	33.01	PASS
		1	49		21.99	8	29.99	2.00	33.01	PASS
		25	0		21.84	8	29.84	2.00	33.01	PASS
		25	12		21.75	8	29.75	2.00	33.01	PASS
		25	24		21.56	8	29.56	2.00	33.01	PASS
		50	0		21.37	8	29.37	2.00	33.01	PASS
	Highest	1	0	QPSK	22.09	8	30.09	2.00	33.01	PASS
		1	24		21.99	8	29.99	2.00	33.01	PASS
		1	49		21.98	8	29.98	2.00	33.01	PASS
		25	0		21.93	8	29.93	2.00	33.01	PASS
		25	12		21.91	8	29.91	2.00	33.01	PASS
		25	24		21.80	8	29.80	2.00	33.01	PASS
		50	0		21.68	8	29.68	2.00	33.01	PASS

Radiated Power (EIRP) for LTE Band 41 /15M										
BW (MHz)	UL Channel	RB Size	RB offset	Modulation	Conduction AVG Power(dBm)	Ant Gain（dBi）	EIRP (dBm)	EIRP Limit(W)	EIRP Limit(dBm)	Verdict
15	Lowest	1	0	QPSK	22.24	8	30.24	2.00	33.01	PASS
		1	37		22.16	8	30.16	2.00	33.01	PASS
		1	74		22.08	8	30.08	2.00	33.01	PASS
		36	0		21.91	8	29.91	2.00	33.01	PASS
		36	18		21.86	8	29.86	2.00	33.01	PASS
		36	39		21.69	8	29.69	2.00	33.01	PASS
		75	0		21.55	8	29.55	2.00	33.01	PASS
	Middle	1	0	QPSK	22.23	8	30.23	2.00	33.01	PASS
		1	37		22.04	8	30.04	2.00	33.01	PASS
		1	74		21.92	8	29.92	2.00	33.01	PASS
		36	0		21.78	8	29.78	2.00	33.01	PASS
		36	18		21.61	8	29.61	2.00	33.01	PASS
		36	39		21.56	8	29.56	2.00	33.01	PASS
		75	0		21.52	8	29.52	2.00	33.01	PASS
	Highest	1	0	QPSK	22.20	8	30.20	2.00	33.01	PASS
		1	37		22.18	8	30.18	2.00	33.01	PASS
		1	74		22.12	8	30.12	2.00	33.01	PASS
		36	0		22.06	8	30.06	2.00	33.01	PASS
		36	18		21.99	8	29.99	2.00	33.01	PASS
		36	39		21.96	8	29.96	2.00	33.01	PASS
		75	0		21.81	8	29.81	2.00	33.01	PASS

Radiated Power (EIRP) for LTE Band 41 /20M										
BW (MHz)	UL Channel	RB Size	RB offset	Modulation	Conduction AVG Power(dBm)	Ant Gain（dBi）	EIRP (dBm)	EIRP Limit(W)	EIRP Limit(dBm)	Verdict
20	Lowest	1	0	QPSK	22.45	8	30.45	2.00	33.01	PASS
		1	49		22.35	8	30.35	2.00	33.01	PASS
		1	99		22.18	8	30.18	2.00	33.01	PASS
		50	0		22.15	8	30.15	2.00	33.01	PASS
		50	24		22.01	8	30.01	2.00	33.01	PASS
		50	49		21.93	8	29.93	2.00	33.01	PASS
		100	0		21.80	8	29.80	2.00	33.01	PASS
	Middle	1	0	QPSK	22.48	8	30.48	2.00	33.01	PASS
		1	49		22.36	8	30.36	2.00	33.01	PASS
		1	99		22.20	8	30.20	2.00	33.01	PASS
		50	0		22.14	8	30.14	2.00	33.01	PASS
		50	24		21.99	8	29.99	2.00	33.01	PASS
		50	49		21.91	8	29.91	2.00	33.01	PASS
		100	0		21.85	8	29.85	2.00	33.01	PASS
	Highest	1	0	QPSK	22.57	8	30.57	2.00	33.01	PASS
		1	49		22.41	8	30.41	2.00	33.01	PASS
		1	99		22.39	8	30.39	2.00	33.01	PASS
		50	0		22.20	8	30.20	2.00	33.01	PASS
		50	24		22.12	8	30.12	2.00	33.01	PASS
		50	49		22.00	8	30.00	2.00	33.01	PASS
		100	0		21.81	8	29.81	2.00	33.01	PASS

Radiated Power (EIRP) for LTE Band 66 /1.4M										
BW (MHz)	UL Channel	RB Size	RB offset	Modulation	Conduction AVG Power(dBm)	Ant Gain（dBi）	EIRP (dBm)	EIRP Limit(W)	EIRP Limit(dBm)	Verdict
1.4	Lowest	1	0	QPSK	21.31	5	26.31	1.00	30.00	PASS
		1	2		21.17	5	26.17	1.00	30.00	PASS
		1	5		21.03	5	26.03	1.00	30.00	PASS
		3	0		20.95	5	25.95	1.00	30.00	PASS
		3	1		20.87	5	25.87	1.00	30.00	PASS
		3	2		20.85	5	25.85	1.00	30.00	PASS
		6	0		20.71	5	25.71	1.00	30.00	PASS
		1	0	16QAM	21.11	5	26.11	1.00	30.00	PASS
		1	2		20.99	5	25.99	1.00	30.00	PASS
		1	5		20.96	5	25.96	1.00	30.00	PASS
		3	0		20.76	5	25.76	1.00	30.00	PASS
		3	1		20.68	5	25.68	1.00	30.00	PASS
		3	2		20.75	5	25.75	1.00	30.00	PASS
		6	0		20.53	5	25.53	1.00	30.00	PASS
	Middle	1	0	QPSK	21.25	5	26.25	1.00	30.00	PASS
		1	2		21.14	5	26.14	1.00	30.00	PASS
		1	5		21.03	5	26.03	1.00	30.00	PASS
		3	0		20.87	5	25.87	1.00	30.00	PASS
		3	1		20.74	5	25.74	1.00	30.00	PASS
		3	2		20.73	5	25.73	1.00	30.00	PASS
		6	0		20.56	5	25.56	1.00	30.00	PASS
		1	0	16QAM	21.19	5	26.19	1.00	30.00	PASS
		1	2		20.94	5	25.94	1.00	30.00	PASS
		1	5		21.02	5	26.02	1.00	30.00	PASS
		3	0		20.83	5	25.83	1.00	30.00	PASS
		3	1		20.64	5	25.64	1.00	30.00	PASS
		3	2		20.62	5	25.62	1.00	30.00	PASS
		6	0		20.39	5	25.39	1.00	30.00	PASS
	Highest	1	0	QPSK	21.22	5	26.22	1.00	30.00	PASS
		1	2		21.22	5	26.22	1.00	30.00	PASS
		1	5		21.12	5	26.12	1.00	30.00	PASS
		3	0		20.97	5	25.97	1.00	30.00	PASS
		3	1		20.91	5	25.91	1.00	30.00	PASS
		3	2		20.75	5	25.75	1.00	30.00	PASS
		6	0		20.57	5	25.57	1.00	30.00	PASS
		1	0	16QAM	21.16	5	26.16	1.00	30.00	PASS
		1	2		21.12	5	26.12	1.00	30.00	PASS
		1	5		21.04	5	26.04	1.00	30.00	PASS
		3	0		20.80	5	25.80	1.00	30.00	PASS
		3	1		20.82	5	25.82	1.00	30.00	PASS
		3	2		20.69	5	25.69	1.00	30.00	PASS
		6	0		20.50	5	25.50	1.00	30.00	PASS

Radiated Power (EIRP) for LTE Band 66 /3M										
BW (MHz)	UL Channel	RB Size	RB offset	Modulation	Conduction AVG Power(dBm)	Ant Gain（dBi）	EIRP (dBm)	EIRP Limit(W)	EIRP Limit(dBm)	Verdict
3	Lowest	1	0	QPSK	21.64	5	26.64	1.00	30.00	PASS
		1	7		21.52	5	26.52	1.00	30.00	PASS
		1	14		21.41	5	26.41	1.00	30.00	PASS
		8	0		21.30	5	26.30	1.00	30.00	PASS
		8	4		21.23	5	26.23	1.00	30.00	PASS
		8	7		21.22	5	26.22	1.00	30.00	PASS
		15	0		21.21	5	26.21	1.00	30.00	PASS
		1	0	16QAM	21.50	5	26.50	1.00	30.00	PASS
		1	7		21.41	5	26.41	1.00	30.00	PASS
		1	14		21.33	5	26.33	1.00	30.00	PASS
		8	0		21.17	5	26.17	1.00	30.00	PASS
		8	4		21.05	5	26.05	1.00	30.00	PASS
		8	7		21.15	5	26.15	1.00	30.00	PASS
		15	0		21.16	5	26.16	1.00	30.00	PASS
	Middle	1	0	QPSK	21.53	5	26.53	1.00	30.00	PASS
		1	7		21.45	5	26.45	1.00	30.00	PASS
		1	14		21.36	5	26.36	1.00	30.00	PASS
		8	0		21.33	5	26.33	1.00	30.00	PASS
		8	4		21.14	5	26.14	1.00	30.00	PASS
		8	7		20.94	5	25.94	1.00	30.00	PASS
		15	0		20.78	5	25.78	1.00	30.00	PASS
		1	0	16QAM	21.51	5	26.51	1.00	30.00	PASS
		1	7		21.35	5	26.35	1.00	30.00	PASS
		1	14		21.25	5	26.25	1.00	30.00	PASS
		8	0		21.16	5	26.16	1.00	30.00	PASS
		8	4		21.03	5	26.03	1.00	30.00	PASS
		8	7		20.89	5	25.89	1.00	30.00	PASS
		15	0		20.66	5	25.66	1.00	30.00	PASS
	Highest	1	0	QPSK	21.71	5	26.71	1.00	30.00	PASS
		1	7		21.59	5	26.59	1.00	30.00	PASS
		1	14		21.41	5	26.41	1.00	30.00	PASS
		8	0		21.40	5	26.40	1.00	30.00	PASS
		8	4		21.21	5	26.21	1.00	30.00	PASS
		8	7		21.08	5	26.08	1.00	30.00	PASS
		15	0		20.90	5	25.90	1.00	30.00	PASS
		1	0	16QAM	21.68	5	26.68	1.00	30.00	PASS
		1	7		21.40	5	26.40	1.00	30.00	PASS
		1	14		21.36	5	26.36	1.00	30.00	PASS
		8	0		21.29	5	26.29	1.00	30.00	PASS
		8	4		21.10	5	26.10	1.00	30.00	PASS
		8	7		21.00	5	26.00	1.00	30.00	PASS
		15	0		20.78	5	25.78	1.00	30.00	PASS

Radiated Power (EIRP) for LTE Band 66 /5M										
BW (MHz)	UL Channel	RB Size	RB offset	Modulation	Conduction AVG Power(dBm)	Ant Gain（dBi）	EIRP (dBm)	EIRP Limit(W)	EIRP Limit(dBm)	Verdict
5	Lowest	1	0	QPSK	21.95	5	26.95	1.00	30.00	PASS
		1	12		21.78	5	26.78	1.00	30.00	PASS
		1	24		21.68	5	26.68	1.00	30.00	PASS
		12	0		21.49	5	26.49	1.00	30.00	PASS
		12	6		21.33	5	26.33	1.00	30.00	PASS
		12	11		21.29	5	26.29	1.00	30.00	PASS
		25	0		21.10	5	26.10	1.00	30.00	PASS
		1	0	16QAM	21.76	5	26.76	1.00	30.00	PASS
		1	12		21.71	5	26.71	1.00	30.00	PASS
		1	24		21.58	5	26.58	1.00	30.00	PASS
		12	0		21.43	5	26.43	1.00	30.00	PASS
		12	6		21.27	5	26.27	1.00	30.00	PASS
		12	11		21.16	5	26.16	1.00	30.00	PASS
		25	0		21.04	5	26.04	1.00	30.00	PASS
	Middle	1	0	QPSK	21.76	5	26.76	1.00	30.00	PASS
		1	12		21.70	5	26.70	1.00	30.00	PASS
		1	24		21.55	5	26.55	1.00	30.00	PASS
		12	0		21.49	5	26.49	1.00	30.00	PASS
		12	6		21.40	5	26.40	1.00	30.00	PASS
		12	11		21.33	5	26.33	1.00	30.00	PASS
		25	0		21.17	5	26.17	1.00	30.00	PASS
		1	0	16QAM	21.73	5	26.73	1.00	30.00	PASS
		1	12		21.64	5	26.64	1.00	30.00	PASS
		1	24		21.51	5	26.51	1.00	30.00	PASS
		12	0		21.39	5	26.39	1.00	30.00	PASS
		12	6		21.38	5	26.38	1.00	30.00	PASS
		12	11		21.16	5	26.16	1.00	30.00	PASS
		25	0		21.08	5	26.08	1.00	30.00	PASS
	Highest	1	0	QPSK	21.83	5	26.83	1.00	30.00	PASS
		1	12		21.75	5	26.75	1.00	30.00	PASS
		1	24		21.74	5	26.74	1.00	30.00	PASS
		12	0		21.74	5	26.74	1.00	30.00	PASS
		12	6		21.73	5	26.73	1.00	30.00	PASS
		12	11		21.72	5	26.72	1.00	30.00	PASS
		25	0		21.56	5	26.56	1.00	30.00	PASS
		1	0	16QAM	21.71	5	26.71	1.00	30.00	PASS
		1	12		21.55	5	26.55	1.00	30.00	PASS
		1	24		21.61	5	26.61	1.00	30.00	PASS
		12	0		21.55	5	26.55	1.00	30.00	PASS
		12	6		21.58	5	26.58	1.00	30.00	PASS
		12	11		21.70	5	26.70	1.00	30.00	PASS
		25	0		21.45	5	26.45	1.00	30.00	PASS

Radiated Power (EIRP) for LTE Band 66 /10M										
BW (MHz)	UL Channel	RB Size	RB offset	Modulation	Conduction AVG Power(dBm)	Ant Gain（dBi）	EIRP (dBm)	EIRP Limit(W)	EIRP Limit(dBm)	Verdict
10	Lowest	1	0	QPSK	22.11	5	27.11	1.00	30.00	PASS
		1	24		21.95	5	26.95	1.00	30.00	PASS
		1	49		21.76	5	26.76	1.00	30.00	PASS
		25	0		21.59	5	26.59	1.00	30.00	PASS
		25	12		21.54	5	26.54	1.00	30.00	PASS
		25	24		21.42	5	26.42	1.00	30.00	PASS
		50	0		21.35	5	26.35	1.00	30.00	PASS
	Middle	1	0	QPSK	22.08	5	27.08	1.00	30.00	PASS
		1	24		21.98	5	26.98	1.00	30.00	PASS
		1	49		21.95	5	26.95	1.00	30.00	PASS
		25	0		21.93	5	26.93	1.00	30.00	PASS
		25	12		21.92	5	26.92	1.00	30.00	PASS
		25	24		21.80	5	26.80	1.00	30.00	PASS
		50	0		21.68	5	26.68	1.00	30.00	PASS
	Highest	1	0	QPSK	22.04	5	27.04	1.00	30.00	PASS
		1	24		21.85	5	26.85	1.00	30.00	PASS
		1	49		21.74	5	26.74	1.00	30.00	PASS
		25	0		21.68	5	26.68	1.00	30.00	PASS
		25	12		21.50	5	26.50	1.00	30.00	PASS
		25	24		21.36	5	26.36	1.00	30.00	PASS
		50	0		21.31	5	26.31	1.00	30.00	PASS

Radiated Power (EIRP) for LTE Band 66 /15M										
BW (MHz)	UL Channel	RB Size	RB offset	Modulation	Conduction AVG Power(dBm)	Ant Gain（dBi）	EIRP (dBm)	EIRP Limit(W)	EIRP Limit(dBm)	Verdict
15	Lowest	1	0	QPSK	22.37	5	27.37	1.00	30.00	PASS
		1	37		22.24	5	27.24	1.00	30.00	PASS
		1	74		22.21	5	27.21	1.00	30.00	PASS
		36	0		22.19	5	27.19	1.00	30.00	PASS
		36	18		22.06	5	27.06	1.00	30.00	PASS
		36	39		22.01	5	27.01	1.00	30.00	PASS
		75	0		21.90	5	26.90	1.00	30.00	PASS
	Middle	1	0	QPSK	22.25	5	27.25	1.00	30.00	PASS
		1	37		22.18	5	27.18	1.00	30.00	PASS
		1	74		22.17	5	27.17	1.00	30.00	PASS
		36	0		22.15	5	27.15	1.00	30.00	PASS
		36	18		22.03	5	27.03	1.00	30.00	PASS
		36	39		21.99	5	26.99	1.00	30.00	PASS
		75	0		21.97	5	26.97	1.00	30.00	PASS
	Highest	1	0	QPSK	22.31	5	27.31	1.00	30.00	PASS
		1	37		22.15	5	27.15	1.00	30.00	PASS
		1	74		22.07	5	27.07	1.00	30.00	PASS
		36	0		21.99	5	26.99	1.00	30.00	PASS
		36	18		21.80	5	26.80	1.00	30.00	PASS
		36	39		21.63	5	26.63	1.00	30.00	PASS
		75	0		21.53	5	26.53	1.00	30.00	PASS

Radiated Power (EIRP) for LTE Band 66 /20M										
BW (MHz)	UL Channel	RB Size	RB offset	Modulation	Conduction AVG Power(dBm)	Ant Gain（dBi）	EIRP (dBm)	EIRP Limit(W)	EIRP Limit(dBm)	Verdict
20	Lowest	1	0	QPSK	22.61	5	27.61	1.00	30.00	PASS
		1	49		22.53	5	27.53	1.00	30.00	PASS
		1	99		22.43	5	27.43	1.00	30.00	PASS
		50	0		22.29	5	27.29	1.00	30.00	PASS
		50	24		22.28	5	27.28	1.00	30.00	PASS
		50	49		22.22	5	27.22	1.00	30.00	PASS
		100	0		22.22	5	27.22	1.00	30.00	PASS
	Middle	1	0	QPSK	22.78	5	27.78	1.00	30.00	PASS
		1	49		22.64	5	27.64	1.00	30.00	PASS
		1	99		22.48	5	27.48	1.00	30.00	PASS
		50	0		22.33	5	27.33	1.00	30.00	PASS
		50	24		22.22	5	27.22	1.00	30.00	PASS
		50	49		22.02	5	27.02	1.00	30.00	PASS
		100	0		21.86	5	26.86	1.00	30.00	PASS
	Highest	1	0	QPSK	22.67	5	27.67	1.00	30.00	PASS
		1	49		22.57	5	27.57	1.00	30.00	PASS
		1	99		22.57	5	27.57	1.00	30.00	PASS
		50	0		22.47	5	27.47	1.00	30.00	PASS
		50	24		22.46	5	27.46	1.00	30.00	PASS
		50	49		22.26	5	27.26	1.00	30.00	PASS
		100	0		22.17	5	27.17	1.00	30.00	PASS

6. OCCUPIED BANDWIDTH

6.1 DESCRIPTION OF OCCUPIED BANDWIDTH MEASUREMENT

6.1.1 MEASUREMENT METHOD

1.The occupied bandwidth is the width of a frequency band such that, below the lower and above the upper frequency limits, the mean powers emitted are each equal to a specified percentage 0.5% of the total mean transmitted power.

2.The 26 db emission bandwidth is defined as the frequency range between two points, one above and one below the carrier frequency, at which the spectral density of the emission is attenuated 26 db below the maximum in-band spectral density of the modulated signal. spectral density (power per unit bandwidth) is to be measured with a detector of resolution bandwidth equal to approximately 1.0% of the emission bandwidth.

6.1.2 TEST SETUP

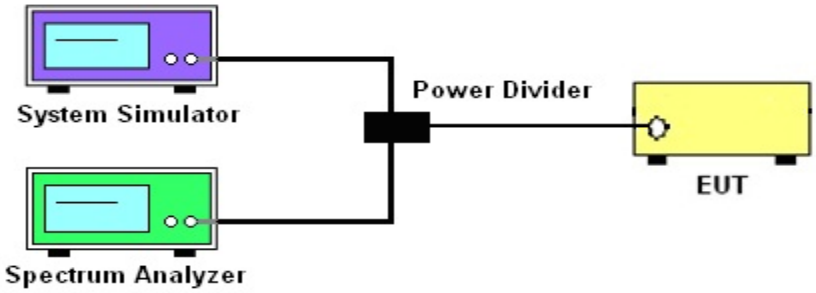

6.1.3 TEST PROCEDURES

1. The testing follows FCC KDB 971168 D01 v03r01 Section 4.2 and 4.3.

2. The EUT was connected to spectrum and system simulator via a power divider.

3. Select lowest, middle, and highest channels for each band and different modulation.

4. Set the test probe and measure the Occupied Bandwidth of the spectrum analyzer.

5. Measure and record the Occupied Bandwidth from the Spectrum Analyzer.

	LTE					
LTE BW	1.4M	3M	5M	10M	15M	20M
Span	3MHz	6MHz	10MHz	20MHz	30MHz	40MHz
RBW	30kHz	30kHz	100kHz	100kHz	300kHz	300kHz
VBW	100kHz	100kHz	300kHz	300kHz	1000kHz	1000kHz
Detector	PK	PK	PK	PK	PK	PK
Trace	Max	Max	Max	Max	Max	Max
Sweep Count	Auto	Auto	Auto	Auto	Auto	Auto

6.1.4 MEASUREMENT RESULT

LTE Band 2 Bandwidth [MHz]							
BW [MHz]	Mode	Lowest		Middle		Highest	
		99% BW	26dB BW	99% BW	26dB BW	99% BW	26dB BW
1.4	QPSK	1.102	1.319	1.108	1.289	1.094	1.295
1.4	16-QAM	1.1006	1.319	1.093	1.284	1.0968	1.302
3	QPSK	2.682	2.919	2.684	2.926	2.68	2.917
3	16-QAM	2.6816	2.95	2.6816	2.932	2.678	2.922
5	QPSK	4.505	5.007	4.5038	5.001	4.515	5.014
5	16-QAM	4.502	5	4.531	5.036	4.513	5.025
10	QPSK	8.903	9.648	8.92	9.664	8.907	9.678
15	QPSK	13.371	14.61	13.43	14.75	13.447	14.73
20	QPSK	17.827	19.06	17.863	19.41	17.905	19.23

LTE Band 4 Bandwidth [MHz]							
BW [MHz]	Mode	Lowest		Middle		Highest	
		99% BW	26dB BW	99% BW	26dB BW	99% BW	26dB BW
1.4	QPSK	1.0991	1.32	1.106	1.284	1.096	1.302
1.4	16-QAM	1.102	1.308	1.094	1.28	1.098	1.302
3	QPSK	2.686	2.922	2.683	2.939	2.683	2.925
3	16-QAM	2.6814	2.95	2.681	2.927	2.679	2.925
5	QPSK	4.505	5.017	4.498	5.023	4.528	5.001
5	16-QAM	4.501	4.985	4.531	5.014	4.519	5.037
10	QPSK	8.909	9.636	8.9291	9.69	8.936	9.787
15	QPSK	13.38	14.56	13.444	14.62	13.448	14.73
20	QPSK	17.82	19.11	17.902	19.33	17.887	19.25

LTE Band 5 Bandwidth [MHz]							
BW [MHz]	Mode	Lowest		Middle		Highest	
		99% BW	26dB BW	99% BW	26dB BW	99% BW	26dB BW
1.4	QPSK	1.0985	1.313	1.106	1.293	1.097	1.33
1.4	16-QAM	1.0987	1.301	1.0944	1.281	1.099	1.299
3	QPSK	2.684	2.918	2.689	2.935	2.6835	2.942
3	16-QAM	2.68	2.937	2.682	2.929	2.6776	2.909
5	QPSK	4.507	5.02	4.499	4.989	4.5	4.987
5	16-QAM	4.505	5.004	4.528	5.017	4.5	4.986
10	QPSK	8.912	9.664	8.911	9.631	8.897	9.664

LTE Band 12 Bandwidth [MHz]							
BW [MHz]	Mode	Lowest		Middle		Highest	
		99% BW	26dB BW	99% BW	26dB BW	99% BW	26dB BW
1.4	QPSK	1.098	1.311	1.102	1.292	1.0972	1.308
1.4	16-QAM	1.098	1.307	1.092	1.273	1.0965	1.287
3	QPSK	2.6791	2.914	2.6898	2.928	2.685	2.94
3	16-QAM	2.678	2.924	2.683	2.942	2.682	2.934
5	QPSK	4.501	5.025	4.509	4.994	4.518	5.018
5	16-QAM	4.496	4.984	4.529	5.029	4.525	5.027
10	QPSK	8.914	9.628	8.943	9.744	8.912	9.692

LTE Band 13 Bandwidth [MHz]							
BW [MHz]	Mode	Lowest		Middle		Highest	
		99% BW	26dB BW	99% BW	26dB BW	99% BW	26dB BW
5	QPSK	4.5	5.021	4.509	5.002	4.513	5.023
5	16-QAM	4.5118	4.972	4.538	5.052	4.521	5.037
10	QPSK	N/A	N/A	8.964	9.749	N/A	N/A

LTE Band 25 Bandwidth [MHz]							
BW [MHz]	Mode	Lowest		Middle		Highest	
		99% BW	26dB BW	99% BW	26dB BW	99% BW	26dB BW
1.4	QPSK	1.0991	1.31	1.104	1.286	1.095	1.294
1.4	16-QAM	1.0907	1.284	1.098	1.3	1.1024	1.321
3	QPSK	2.687	2.928	2.684	2.932	2.6877	2.938
3	16-QAM	2.68	2.94	2.682	2.924	2.683	2.937
5	QPSK	4.502	5.016	4.501	4.993	4.532	5.015
5	16-QAM	4.523	5.023	4.523	5.047	4.515	5.001
10	QPSK	8.919	9.578	8.927	9.736	8.898	9.574
15	QPSK	13.396	14.63	13.432	14.76	13.329	14.46
20	QPSK	17.852	19.32	17.85	19.11	17.777	19.04

LTE Band 26(Part 22) Bandwidth [MHz]							
BW [MHz]	Mode	Lowest		Middle		Highest	
		99% BW	26dB BW	99% BW	26dB BW	99% BW	26dB BW
1.4	QPSK	1.103	1.293	1.098	1.34	1.1008	1.369
1.4	16-QAM	1.0968	1.297	1.1	1.311	1.0944	1.292
3	QPSK	2.69	2.948	2.683	2.949	2.679	2.927
3	16-QAM	2.6795	2.925	2.68	2.938	2.681	2.907
5	QPSK	4.499	5.016	4.519	5.001	4.489	4.998
5	16-QAM	4.5282	5.033	4.505	4.992	4.511	5.011
10	QPSK	8.92	9.701	8.91	9.569	8.916	9.663
15	QPSK	13.337	14.49	13.385	14.59	13.488	14.8

LTE Band 26(Part 90) Bandwidth [MHz]							
BW [MHz]	Mode	Lowest		Middle		Highest	
		99% BW	26dB BW	99% BW	26dB BW	99% BW	26dB BW
1.4	QPSK	1.1046	1.287	1.096	1.337	1.0945	1.32
1.4	16-QAM	1.096	1.31	1.098	1.309	1.0926	1.286
3	QPSK	2.687	2.928	2.683	2.949	2.683	2.919
3	16-QAM	2.68	2.918	2.6795	2.949	2.682	2.934
5	QPSK	4.494	5.01	4.4996	4.988	4.526	4.999
5	16-QAM	4.52	5.026	4.5301	5.035	4.511	5.015
10	QPSK	N/A	N/A	8.92	9.75	N/A	N/A

LTE Band 41 Bandwidth [MHz]							
BW [MHz]	Mode	Lowest		Middle		Highest	
		99% BW	26dB BW	99% BW	26dB BW	99% BW	26dB BW
5	QPSK	4.523	4.99	4.502	5.008	4.499	5.028
5	16-QAM	4.5137	5.019	4.521	4.981	4.503	4.996
10	QPSK	8.934	10.02	8.936	9.974	8.926	9.726
15	QPSK	13.443	14.64	13.446	15.92	13.469	15.19
20	QPSK	17.872	19.49	17.862	19.59	17.892	19.06

LTE Band 66 Bandwidth [MHz]							
BW [MHz]	Mode	Lowest		Middle		Highest	
		99% BW	26dB BW	99% BW	26dB BW	99% BW	26dB BW
1.4	QPSK	1.1052	1.282	1.096	1.299	1.098	1.322
1.4	16-QAM	1.094	1.277	1.0964	1.301	1.1005	1.312
3	QPSK	2.688	2.922	2.684	2.941	2.683	2.931
3	16-QAM	2.677	2.924	2.6814	2.919	2.681	2.943
5	QPSK	4.509	5.02	4.501	5.009	4.5122	5.022
5	16-QAM	4.501	5	4.526	5.022	4.529	5.044
10	QPSK	8.917	9.687	8.926	9.687	8.934	9.745
15	QPSK	13.39	14.59	13.44	14.7	13.447	14.72
20	QPSK	17.816	19.13	17.906	19.49	17.852	19.05

Note: Test chart See Appendix A

7. CONDUCTED BAND EDGE

7.1 DESCRIPTION OF CONDUCTED BAND EDGE MEASUREMENT

7.1.1 MEASUREMENT METHOD

1. §22.917(a)
For operations in the 824 – 849 MHz band, the FCC limit is 43 + 10log10(P[Watts]) dB below the transmitter power P(Watts) in a 100kHz bandwidth. However, in the 1MHz bands immediately outside and adjacent to the licensee's frequency block, a resolution bandwidth of at least one percent of the emission bandwidth of the fundamental emission of the transmitter may be employed.

2. §24.238 (a)
For operations in the 1850-1910 and 1930-1990 MHz band, the FCC limit is 43 + 10log10(P[Watts]) dB below the transmitter power P(Watts) in a 1MHz bandwidth. However, in the 1 MHz bands immediately outside and adjacent to the frequency block a resolution bandwidth of at least one percent of the emission bandwidth of the fundamental emission of the transmitter may be employed

3. §27.53 (h)
For operations in the 1710 – 1755 MHz band, the FCC limit is 43 + 10log10(P[Watts]) dB below the transmitter power P(Watts) in a 1 MHz bandwidth. However, in the 1MHz bands immediately outside and adjacent to the licensee's frequency block, a resolution bandwidth of at least one percent of the emission bandwidth of the fundamental emission of the transmitter may be employed.

4. §27.53(m)(4)
For operations in the 2496 MHz ~ 2690 MHz band this section, the attenuation factor shall be not less than 40 + 10 log (P) dB on all frequencies between the channel edge and 5 megahertz from the channel edge, 43 + 10 log (P) dB on all frequencies between 5 megahertz and X megahertz from the channel edge, and 55 + 10 log (P) dB on all frequencies more than X megahertz from the channel edge, where X is the greater of 6 megahertz or the actual emission bandwidth as defined in paragraph (m)(6) of this section. In addition, the attenuation factor shall not be less that 43 + 10 log (P) dB on all frequencies between 2490.5 MHzand 2496 MHz and 55 + 10 log (P) dB at or below 2490.5 MHz. Mobile Satellite Service licenseesoperating on frequencies below 2495 MHz may also submit a documented interference complaintagainst BRS licensees operating on channel BRS Channel 1 on the same terms and conditions as adjacent channel BRS or EBS licensees.

5. §27.53 (g)
For operations in the 698 -746 MHz band, the FCC limit is 43 + 10log10(P[Watts]) dB below the transmitter power P(Watts) in a 100 kHz bandwidth. However, in the 100 kilohertz bands immediately outside and adjacent to a licensee's frequency block, a resolution bandwidth of at least 30 kHz may be employed.

6. §90.691 (a)
For any frequency removed from the EA licensee's frequency block greater than 37.5 kHz, the power of any emission shall be attenuated below the transmitter power (P) in watts by at least 43 + 10Log10(P) decibels or 80 decibels, whichever is the lesser attenuation, where f is the frequency removed from the center of the outer channel in the block in kilohertz and where f is greater than 37.5 kHz.

7.1.2 TEST SETUP

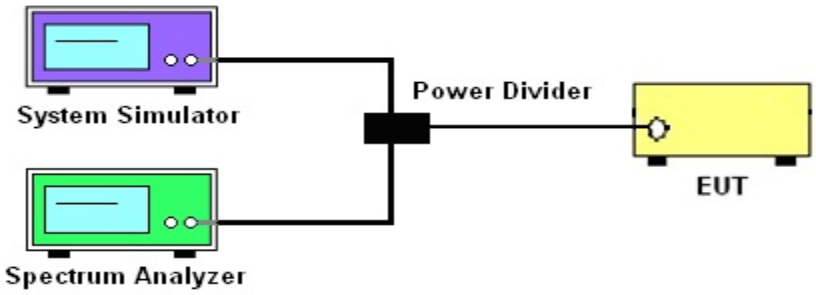

7.1.3 TEST PROCEDURES

1. The testing FCC KDB 971168 D01 v03r01 Section 6.0 and ANSI C63.26 2015 Section 5.7.

2. The EUT was connected to spectrum analyzer and system simulator via a power divider.

3. The band edges of low and high channels for the highest RF powers were measured. Set RBW >= 1% EBW in the 1MHz band immediately outside and adjacent to the band edge.

4. Set spectrum analyzer with RMS/AVG detector.

5. The RF fundamental frequency should be excluded against the limit line in the operating frquency band.
6.The limit line is derived from 43 + 10log(P)dB below the transmitter power P(Watts)
= P(W)- [43 + 10log(P)] (dB)
= [30 + 10log(P)] (dBm) - [43 + 10log(P)] (dB)
= -13dBm.

	LTE					
LTE BW	1.4M	3M	5M	10M	15M	20M
Span	12MHz	13MHz	15MHz	20MHz	25MHz	30MHz
RBW	30kHz	30kHz	100kHz	100kHz	300kHz	300kHz
VBW	100kHz	100kHz	300kHz	300kHz	1000kHz	1000kHz
Detector	RMS	RMS	RMS	RMS	RMS	RMS
Trace	Max	Max	Max	Max	Max	Max
Sweep Count	Auto	Auto	Auto	Auto	Auto	Auto

7.1.4 MEASUREMENT RESULT
Note: Test chart See Appendix B

8. CONDUCTED SPURIOUS EMISSION

8.1 DESCRIPTION OF CONDUCTED SPURIOUS EMISSION MEASUREMENT

8.1.1 MEASUREMENT METHOD

The power of any emission outside of the authorized operating frequency ranges must be lower than the transmitter power (P) by a factor of at least 43 + 10 log (P) dB.
It is measured by means of a calibrated spectrum analyzer and scanned from 30 MHz up to a frequency including its 10th harmonic.

8.1.2 TEST SETUP

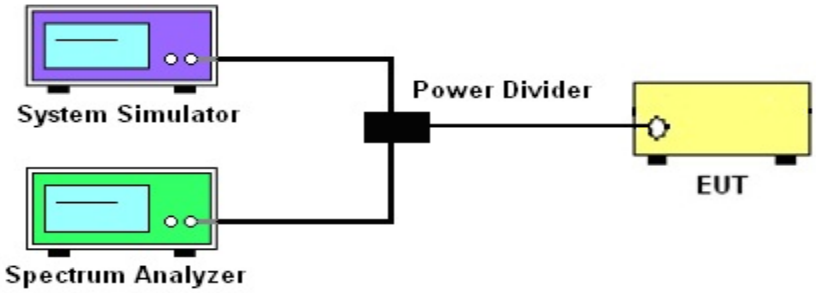

8.1.3 TEST PROCEDURES

1. The testing FCC KDB 971168 D01 v03r01 Section 6.0 and ANSI C63.26 2015 Section 5.7.

2. The EUT was connected to spectrum analyzer and system simulator via a power divider.

3. The RF output of EUT was connected to the spectrum analyzer by RF cable and attenuator. The path loss was compensated to the results for each measurement
4. Make the measurement with the spectrum analyzer's RBW = 1MHz, VBW = 3MHz, taking the record of maximum spurious emission.
5. The RF fundamental frequency should be excluded against the limit line in the operating frquency band.
6.The limit line is derived from 43 + 10log(P)dB below the transmitter power P(Watts)
= P(W)- [43 + 10log(P)] (dB) = [30 + 10log(P)] (dBm) - [43 + 10log(P)] (dB)
= -13dBm.

	LTE					
LTE BW	1.4M	3M	5M	10M	15M	20M
Span	Auto	Auto	Auto	Auto	Auto	Auto
RBW	1000kHz	1000kHz	1000kHz	1000kHz	1000kHz	1000kHz
VBW	3000kHz	3000kHz	3000kHz	3000kHz	3000kHz	3000kHz
Detector	PK	PK	PK	PK	PK	PK
Trace	Max	Max	Max	Max	Max	Max

8.1.4 TEST RESULTS

Note: Test chart See Appendix C

9. RADIATED SPURIOUS EMISSION

9.1 DESCRIPTION OF RADIATED SPURIOUS EMISSION

9.1.1 MEASUREMENT METHOD

The radiated spurious emission was measured by substitution method according to ANSI C63.26 2015. The power of any emission outside of the authorized operating frequency ranges must be attenuated below the transmitter power (P) by a factor of at least 43 + 10 log (P) dB.

9.1.2 TEST SETUP

The procedure of radiated spurious emissions is as follows:
a) Pre-calibration With pre-calibration method, the Radiated Spurious Emissions(RSE) is calculated as, RSE=Rx（dBuV）+CL（dB）+SA（dB）+Gain（dBi）-107（dBuV to dBm）The SA is calibrated using following setup.
b) EUT was placed on 1.5 m non-conductive stand at a 3 m test distance from the receive antenna. A receiving antenna was placed on the antenna mast 3 m from the test item for emission measurements. The height of receiving antenna is 0.8m. The test setup refers to figure below. Detected emissions were maximized at each frequency by rotating the test item and adjusting the receiving antenna polarization. The radiated emission measurements of all non-harmonic and harmonics of the transmit frequency through the 10th harmonic measured with peak detector and 1MHz bandwidth.
Radiated emissions measurements were made only at the upper, middle, and lower carrier frequencies It was decided that measurements at these three carrier frequencies would be sufficient to demonstrate compliance with emissions limits because it was seen that all the significant spurs occur well outside the band and no radiation was seen from a carrier in one block of any band into any of the other blocks.
The substitution method is used. Substitution values at each frequency are measured before and saved to the test software. A "reference path loss" is established and the ARpl is the attenuation of “reference path loss”, and including the gain of receive antenna, the gain of the preamplifier, the cable loss and the air loss. The measurement results are obtained as described below:
Power=PMea+ARpl
For radiated test from 30MHz to 1GHz

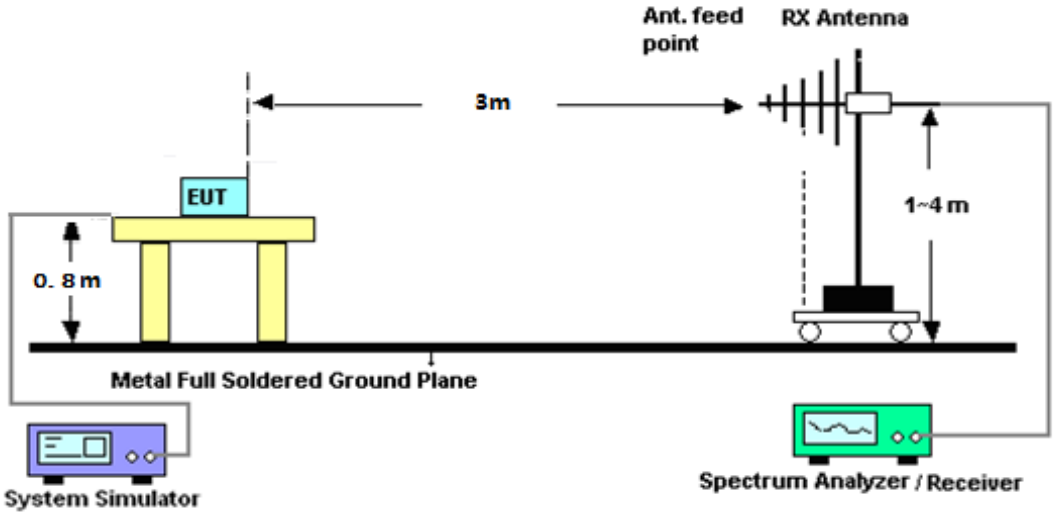

For radiated test from above 1GHz

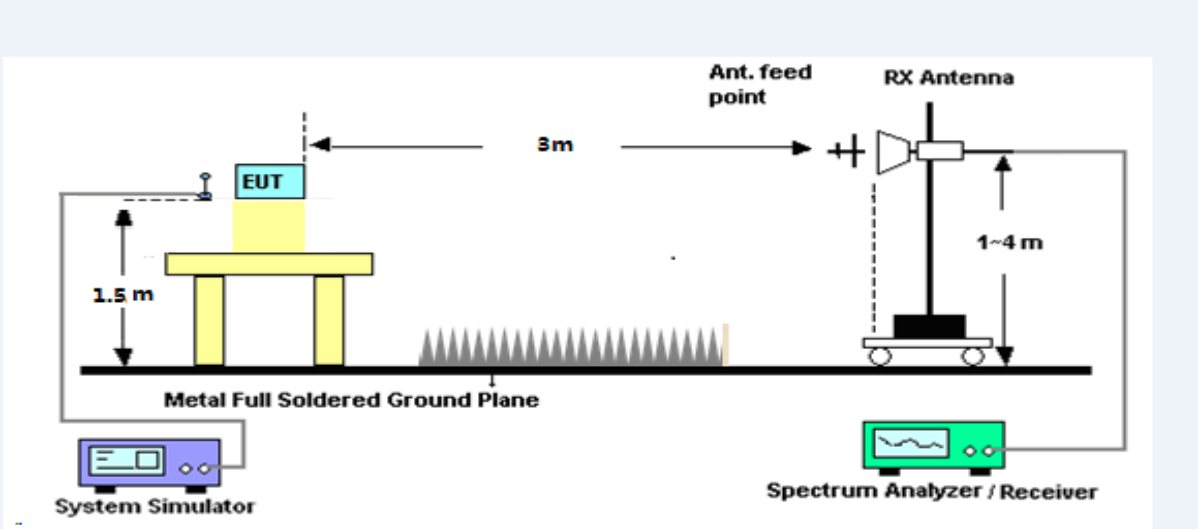

9.1.3 TEST PROCEDURES

1. The testing FCC KDB 971168 D01 Section 7 and ANSI C63.26 2015 Section 5.5.

2. The EUT was placed on a rotatable wooden table with 1.5 meter above ground.

3. The EUT was set 3 meters from the receiving antenna, which was mounted on the antenna tower.

4. The table was rotated 360 degrees to determine the position of the highest spurious emission.

5. The height of the receiving antenna is varied between one meter and four meters to search the maximum spurious emission for both horizontal and vertical polarizations

6. Make the measurement with the spectrum analyzer's RBW = 1MHz, VBW = 3MHz, taking the record of maximum spurious emission.

7. A horn antenna was substituted in place of the EUT and was driven by a signal generator.

8. Tune the output power of signal generator to the same emission level with EUT maximum spurious emission.

9. Taking the record of output power at antenna port.

10. Repeat step 7 to step 8 for another polarization.

11. The RF fundamental frequency should be excluded against the limit line in the operating frequency band.

The limit line is derived from 43 + 10log(P)dB below the transmitter power P(Watts)

= P(W)- [43 + 10log(P)] (dB)

= [30 + 10log(P)] (dBm) - [43 + 10log(P)] (dB)

= -13dBm

9.1.4 TEST RESULTS

LTE Band 2 / 1.4MHz / QPSK / RB Size 1 Offset 0/ The Worst Test Results for Lowest							
Frequency(MHz)	S G.Lev (dBm)	Ant(dBi)	Loss	PMea (dBm)	Limit （dBm）	Margin (dBm)	Polarity
3701.28	-34.33	12.60	12.93	-34.66	-13.00	-21.66	H
5551.97	-34.32	13.10	17.11	-38.33	-13.00	-25.33	H
7402.82	-33.22	11.50	22.20	-43.92	-13.00	-30.92	H
3701.28	-34.98	12.60	12.93	-35.31	-13.00	-22.31	V
5551.97	-34.09	13.10	17.11	-38.10	-13.00	-25.10	V
7402.82	-31.90	11.50	22.20	-42.60	-13.00	-29.60	V
LTE Band 2 / 1.4MHz / QPSK / RB Size 1 Offset 0/ The Worst Test Results for Middle							
Frequency(MHz)	S G.Lev (dBm)	Ant(dBi)	Loss	PMea (dBm)	Limit （dBm）	Margin (dBm)	Polarity
3759.85	-34.38	12.60	12.93	-34.71	-13.00	-21.71	H
5639.87	-34.12	13.10	17.11	-38.13	-13.00	-25.13	H
7520.21	-33.28	11.50	22.20	-43.98	-13.00	-30.98	H
3759.85	-35.76	12.60	12.93	-36.09	-13.00	-23.09	V
5639.87	-34.37	13.10	17.11	-38.38	-13.00	-25.38	V
7520.21	-32.72	11.50	22.20	-43.42	-13.00	-30.42	V
LTE Band 2 / 1.4MHz / QPSK / RB Size 1 Offset 0/ The Worst Test Results for Highest							
Frequency(MHz)	S G.Lev (dBm)	Ant(dBi)	Loss	PMea (dBm)	Limit （dBm）	Margin (dBm)	Polarity
3818.33	-34.62	12.60	12.93	-34.95	-13.00	-21.95	H
5727.73	-34.08	13.10	17.11	-38.09	-13.00	-25.09	H
7636.91	-32.31	11.50	22.20	-43.01	-13.00	-30.01	H
3818.33	-34.73	12.60	12.93	-35.06	-13.00	-22.06	V
5727.73	-34.18	13.10	17.11	-38.19	-13.00	-25.19	V
7636.91	-33.20	11.50	22.20	-43.90	-13.00	-30.90	V

LTE Band 2 / 3MHz / QPSK / RB Size 1 Offset 0/ The Worst Test Results for Lowest							
Frequency(MHz)	S G.Lev (dBm)	Ant(dBi)	Loss	PMea (dBm)	Limit （dBm）	Margin (dBm)	Polarity
3703.08	-34.13	12.60	12.93	-34.46	-13.00	-21.46	H
5554.49	-35.15	13.10	17.11	-39.16	-13.00	-26.16	H
7405.74	-33.17	11.50	22.20	-43.87	-13.00	-30.87	H
3703.08	-35.31	12.60	12.93	-35.64	-13.00	-22.64	V
5554.49	-35.15	13.10	17.11	-39.16	-13.00	-26.16	V
7405.74	-32.31	11.50	22.20	-43.01	-13.00	-30.01	V
LTE Band 2 / 3MHz / QPSK / RB Size 1 Offset 0/ The Worst Test Results for Middle							
Frequency(MHz)	S G.Lev (dBm)	Ant(dBi)	Loss	PMea (dBm)	Limit （dBm）	Margin (dBm)	Polarity
3759.85	-33.69	12.60	12.93	-34.02	-13.00	-21.02	H
5640.18	-35.48	13.10	17.11	-39.49	-13.00	-26.49	H
7520.03	-33.24	11.50	22.20	-43.94	-13.00	-30.94	H
3759.85	-35.75	12.60	12.93	-36.08	-13.00	-23.08	V
5640.18	-33.82	13.10	17.11	-37.83	-13.00	-24.83	V
7520.03	-32.75	11.50	22.20	-43.45	-13.00	-30.45	V
LTE Band 2 / 3MHz / QPSK / RB Size 1 Offset 0/ The Worst Test Results for Highest							
Frequency(MHz)	S G.Lev (dBm)	Ant(dBi)	Loss	PMea (dBm)	Limit （dBm）	Margin (dBm)	Polarity
3817.05	-34.37	12.60	12.93	-34.70	-13.00	-21.70	H
5725.48	-34.26	13.10	17.11	-38.27	-13.00	-25.27	H
7634.01	-33.18	11.50	22.20	-43.88	-13.00	-30.88	H
3817.05	-35.28	12.60	12.93	-35.61	-13.00	-22.61	V
5725.48	-34.59	13.10	17.11	-38.60	-13.00	-25.60	V
7634.01	-32.17	11.50	22.20	-42.87	-13.00	-29.87	V

LTE Band 2 / 5MHz / QPSK / RB Size 1 Offset 0/ The Worst Test Results for Lowest							
Frequency(MHz)	S G.Lev (dBm)	Ant(dBi)	Loss	PMea (dBm)	Limit （dBm）	Margin (dBm)	Polarity
3705.23	-34.32	12.60	12.93	-34.65	-13.00	-21.65	H
5557.18	-34.28	13.10	17.11	-38.29	-13.00	-25.29	H
7409.98	-32.53	11.50	22.20	-43.23	-13.00	-30.23	H
3705.23	-35.83	12.60	12.93	-36.16	-13.00	-23.16	V
5557.18	-34.33	13.10	17.11	-38.34	-13.00	-25.34	V
7409.98	-32.91	11.50	22.20	-43.61	-13.00	-30.61	V
LTE Band 2 / 5MHz / QPSK / RB Size 1 Offset 0/ The Worst Test Results for Middle							
Frequency(MHz)	S G.Lev (dBm)	Ant(dBi)	Loss	PMea (dBm)	Limit （dBm）	Margin (dBm)	Polarity
3760.23	-34.34	12.60	12.93	-34.67	-13.00	-21.67	H
5640.28	-35.25	13.10	17.11	-39.26	-13.00	-26.26	H
7519.84	-32.63	11.50	22.20	-43.33	-13.00	-30.33	H
3760.23	-34.89	12.60	12.93	-35.22	-13.00	-22.22	V
5640.28	-34.46	13.10	17.11	-38.47	-13.00	-25.47	V
7519.84	-32.24	11.50	22.20	-42.94	-13.00	-29.94	V
LTE Band 2 / 5MHz / QPSK / RB Size 1 Offset 0/ The Worst Test Results for Highest							
Frequency(MHz)	S G.Lev (dBm)	Ant(dBi)	Loss	PMea (dBm)	Limit （dBm）	Margin (dBm)	Polarity
3815.35	-33.44	12.60	12.93	-33.77	-13.00	-20.77	H
5722.39	-35.43	13.10	17.11	-39.44	-13.00	-26.44	H
7629.89	-33.43	11.50	22.20	-44.13	-13.00	-31.13	H
3815.35	-35.41	12.60	12.93	-35.74	-13.00	-22.74	V
5722.39	-34.65	13.10	17.11	-38.66	-13.00	-25.66	V
7629.89	-32.54	11.50	22.20	-43.24	-13.00	-30.24	V

LTE Band 2 / 10MHz / QPSK / RB Size 1 Offset 0/ The Worst Test Results for Lowest							
Frequency(MHz)	S G.Lev (dBm)	Ant(dBi)	Loss	PMea (dBm)	Limit （dBm）	Margin (dBm)	Polarity
3710.01	-34.38	12.60	12.93	-34.71	-13.00	-21.71	H
5565.36	-34.09	13.10	17.11	-38.10	-13.00	-25.10	H
7420.14	-33.13	11.50	22.20	-43.83	-13.00	-30.83	H
3710.01	-35.56	12.60	12.93	-35.89	-13.00	-22.89	V
5565.36	-34.24	13.10	17.11	-38.25	-13.00	-25.25	V
7420.14	-32.01	11.50	22.20	-42.71	-13.00	-29.71	V
LTE Band 2 / 10MHz / QPSK / RB Size 1 Offset 0/ The Worst Test Results for Middle							
Frequency(MHz)	S G.Lev (dBm)	Ant(dBi)	Loss	PMea (dBm)	Limit （dBm）	Margin (dBm)	Polarity
3759.89	-34.64	12.60	12.93	-34.97	-13.00	-21.97	H
5640.12	-34.86	13.10	17.11	-38.87	-13.00	-25.87	H
7520.28	-32.25	11.50	22.20	-42.95	-13.00	-29.95	H
3759.89	-34.78	12.60	12.93	-35.11	-13.00	-22.11	V
5640.12	-34.07	13.10	17.11	-38.08	-13.00	-25.08	V
7520.28	-32.40	11.50	22.20	-43.10	-13.00	-30.10	V
LTE Band 2 / 10MHz / QPSK / RB Size 1 Offset 0/ The Worst Test Results for Highest							
Frequency(MHz)	S G.Lev (dBm)	Ant(dBi)	Loss	PMea (dBm)	Limit （dBm）	Margin (dBm)	Polarity
3810.37	-33.59	12.60	12.93	-33.92	-13.00	-20.92	H
5715.07	-35.47	13.10	17.11	-39.48	-13.00	-26.48	H
7619.88	-33.64	11.50	22.20	-44.34	-13.00	-31.34	H
3810.37	-35.58	12.60	12.93	-35.91	-13.00	-22.91	V
5715.07	-34.06	13.10	17.11	-38.07	-13.00	-25.07	V
7619.88	-31.94	11.50	22.20	-42.64	-13.00	-29.64	V

LTE Band 2 / 15MHz / QPSK / RB Size 1 Offset 0/ The Worst Test Results for Lowest							
Frequency(MHz)	S G.Lev (dBm)	Ant(dBi)	Loss	PMea (dBm)	Limit （dBm）	Margin (dBm)	Polarity
3715.27	-34.33	12.60	12.93	-34.66	-13.00	-21.66	H
5572.41	-34.57	13.10	17.11	-38.58	-13.00	-25.58	H
7430.69	-33.40	11.50	22.20	-44.10	-13.00	-31.10	H
3715.27	-34.75	12.60	12.93	-35.08	-13.00	-22.08	V
5572.41	-33.79	13.10	17.11	-37.80	-13.00	-24.80	V
7430.69	-33.07	11.50	22.20	-43.77	-13.00	-30.77	V
LTE Band 2 / 15MHz / QPSK / RB Size 1 Offset 0/ The Worst Test Results for Middle							
Frequency(MHz)	S G.Lev (dBm)	Ant(dBi)	Loss	PMea (dBm)	Limit （dBm）	Margin (dBm)	Polarity
3759.78	-33.85	12.60	12.93	-34.18	-13.00	-21.18	H
5640.14	-34.40	13.10	17.11	-38.41	-13.00	-25.41	H
7519.88	-33.43	11.50	22.20	-44.13	-13.00	-31.13	H
3759.78	-35.28	12.60	12.93	-35.61	-13.00	-22.61	V
5640.14	-34.38	13.10	17.11	-38.39	-13.00	-25.39	V
7519.88	-32.96	11.50	22.20	-43.66	-13.00	-30.66	V
LTE Band 2 / 15MHz / QPSK / RB Size 1 Offset 0/ The Worst Test Results for Highest							
Frequency(MHz)	S G.Lev (dBm)	Ant(dBi)	Loss	PMea (dBm)	Limit （dBm）	Margin (dBm)	Polarity
3804.97	-34.90	12.60	12.93	-35.23	-13.00	-22.23	H
5707.39	-34.89	13.10	17.11	-38.90	-13.00	-25.90	H
7609.84	-33.49	11.50	22.20	-44.19	-13.00	-31.19	H
3804.97	-34.66	12.60	12.93	-34.99	-13.00	-21.99	V
5707.39	-34.19	13.10	17.11	-38.20	-13.00	-25.20	V
7609.84	-31.97	11.50	22.20	-42.67	-13.00	-29.67	V

LTE Band 2 / 20MHz / QPSK / RB Size 1 Offset 0/ The Worst Test Results for Lowest							
Frequency(MHz)	S G.Lev (dBm)	Ant(dBi)	Loss	PMea (dBm)	Limit （dBm）	Margin (dBm)	Polarity
3720.33	-34.80	12.60	12.93	-35.13	-13.00	-22.13	H
5580.33	-34.48	13.10	17.11	-38.49	-13.00	-25.49	H
7439.98	-33.47	11.50	22.20	-44.17	-13.00	-31.17	H
3720.33	-35.34	12.60	12.93	-35.67	-13.00	-22.67	V
5580.33	-33.79	13.10	17.11	-37.80	-13.00	-24.80	V
7439.98	-32.40	11.50	22.20	-43.10	-13.00	-30.10	V
LTE Band 2 / 20MHz / QPSK / RB Size 1 Offset 0/ The Worst Test Results for Middle							
Frequency(MHz)	S G.Lev (dBm)	Ant(dBi)	Loss	PMea (dBm)	Limit （dBm）	Margin (dBm)	Polarity
3759.94	-34.22	12.60	12.93	-34.55	-13.00	-21.55	H
5640.13	-35.43	13.10	17.11	-39.44	-13.00	-26.44	H
7519.83	-33.04	11.50	22.20	-43.74	-13.00	-30.74	H
3759.94	-35.08	12.60	12.93	-35.41	-13.00	-22.41	V
5640.13	-33.96	13.10	17.11	-37.97	-13.00	-24.97	V
7519.83	-31.92	11.50	22.20	-42.62	-13.00	-29.62	V
LTE Band 2 / 20MHz / QPSK / RB Size 1 Offset 0/ The Worst Test Results for Highest							
Frequency(MHz)	S G.Lev (dBm)	Ant(dBi)	Loss	PMea (dBm)	Limit （dBm）	Margin (dBm)	Polarity
3800.19	-34.26	12.60	12.93	-34.59	-13.00	-21.59	H
5699.90	-34.11	13.10	17.11	-38.12	-13.00	-25.12	H
7599.96	-32.23	11.50	22.20	-42.93	-13.00	-29.93	H
3800.19	-35.22	12.60	12.93	-35.55	-13.00	-22.55	V
5699.90	-34.69	13.10	17.11	-38.70	-13.00	-25.70	V
7599.96	-32.44	11.50	22.20	-43.14	-13.00	-30.14	V

LTE Band 4 / 1.4MHz / QPSK / RB Size 1 Offset 0/ The Worst Test Results for Lowest							
Frequency(MHz)	S G.Lev (dBm)	Ant(dBi)	Loss	PMea (dBm)	Limit （dBm）	Margin (dBm)	Polarity
3420.92	-34.46	12.90	12.56	-34.12	-13.00	-21.12	H
5131.87	-35.12	13.10	16.32	-38.34	-13.00	-25.34	H
6842.42	-32.63	12.33	21.13	-41.43	-13.00	-28.43	H
3420.92	-34.84	12.90	12.56	-34.50	-13.00	-21.50	V
5131.87	-34.87	13.10	16.32	-38.09	-13.00	-25.09	V
6842.42	-32.00	12.33	21.13	-40.80	-13.00	-27.80	V
LTE Band 4 / 1.4MHz / QPSK / RB Size 1 Offset 0/ The Worst Test Results for Middle							
Frequency(MHz)	S G.Lev (dBm)	Ant(dBi)	Loss	PMea (dBm)	Limit （dBm）	Margin (dBm)	Polarity
3464.64	-33.82	12.90	12.56	-33.48	-13.00	-20.48	H
5196.70	-35.16	13.10	16.32	-38.38	-13.00	-25.38	H
6930.04	-32.60	12.33	21.13	-41.40	-13.00	-28.40	H
3464.64	-34.70	12.90	12.56	-34.36	-13.00	-21.36	V
5196.70	-33.79	13.10	16.32	-37.01	-13.00	-24.01	V
6930.04	-33.10	12.33	21.13	-41.90	-13.00	-28.90	V
LTE Band 4 / 1.4MHz / QPSK / RB Size 1 Offset 0/ The Worst Test Results for Highest							
Frequency(MHz)	S G.Lev (dBm)	Ant(dBi)	Loss	PMea (dBm)	Limit （dBm）	Margin (dBm)	Polarity
3508.13	-33.58	12.90	12.56	-33.24	-13.00	-20.24	H
5262.62	-34.49	13.10	16.32	-37.71	-13.00	-24.71	H
7015.69	-32.36	12.33	21.13	-41.16	-13.00	-28.16	H
3508.13	-35.53	12.90	12.56	-35.19	-13.00	-22.19	V
5262.62	-33.93	13.10	16.32	-37.15	-13.00	-24.15	V
7015.69	-32.64	12.33	21.13	-41.44	-13.00	-28.44	V

LTE Band 4 / 3MHz / QPSK / RB Size 1 Offset 0/ The Worst Test Results for Lowest							
Frequency(MHz)	S G.Lev (dBm)	Ant(dBi)	Loss	PMea (dBm)	Limit （dBm）	Margin (dBm)	Polarity
3423.93	-34.60	12.90	12.56	-34.26	-13.00	-21.26	H
5136.00	-34.28	13.10	16.32	-37.50	-13.00	-24.50	H
6848.43	-32.84	12.33	21.13	-41.64	-13.00	-28.64	H
3423.93	-36.00	12.90	12.56	-35.66	-13.00	-22.66	V
5136.00	-34.61	13.10	16.32	-37.83	-13.00	-24.83	V
6848.43	-33.11	12.33	21.13	-41.91	-13.00	-28.91	V
LTE Band 4 / 3MHz / QPSK / RB Size 1 Offset 0/ The Worst Test Results for Middle							
Frequency(MHz)	S G.Lev (dBm)	Ant(dBi)	Loss	PMea (dBm)	Limit （dBm）	Margin (dBm)	Polarity
3464.63	-34.40	12.90	12.56	-34.06	-13.00	-21.06	H
5196.66	-34.26	13.10	16.32	-37.48	-13.00	-24.48	H
6930.03	-32.82	12.33	21.13	-41.62	-13.00	-28.62	H
3464.63	-34.63	12.90	12.56	-34.29	-13.00	-21.29	V
5196.66	-33.76	13.10	16.32	-36.98	-13.00	-23.98	V
6930.03	-32.78	12.33	21.13	-41.58	-13.00	-28.58	V
LTE Band 4 / 3MHz / QPSK / RB Size 1 Offset 0/ The Worst Test Results for Highest							
Frequency(MHz)	S G.Lev (dBm)	Ant(dBi)	Loss	PMea (dBm)	Limit （dBm）	Margin (dBm)	Polarity
3505.93	-34.14	12.90	12.56	-33.80	-13.00	-20.80	H
5261.81	-35.25	13.10	16.32	-38.47	-13.00	-25.47	H
7012.46	-32.52	12.33	21.13	-41.32	-13.00	-28.32	H
3505.93	-35.20	12.90	12.56	-34.86	-13.00	-21.86	V
5261.81	-33.85	13.10	16.32	-37.07	-13.00	-24.07	V
7012.46	-32.69	12.33	21.13	-41.49	-13.00	-28.49	V

LTE Band 4 / 5MHz / QPSK / RB Size 1 Offset 0/ The Worst Test Results for Lowest							
Frequency(MHz)	S G.Lev (dBm)	Ant(dBi)	Loss	PMea (dBm)	Limit （dBm）	Margin (dBm)	Polarity
3424.61	-34.02	12.90	12.56	-33.68	-13.00	-20.68	H
5137.18	-34.28	13.10	16.32	-37.50	-13.00	-24.50	H
6849.84	-32.86	12.33	21.13	-41.66	-13.00	-28.66	H
3424.61	-35.18	12.90	12.56	-34.84	-13.00	-21.84	V
5137.18	-35.06	13.10	16.32	-38.28	-13.00	-25.28	V
6849.84	-32.18	12.33	21.13	-40.98	-13.00	-27.98	V
LTE Band 4 / 5MHz / QPSK / RB Size 1 Offset 0/ The Worst Test Results for Middle							
Frequency(MHz)	S G.Lev (dBm)	Ant(dBi)	Loss	PMea (dBm)	Limit （dBm）	Margin (dBm)	Polarity
3464.74	-33.67	12.90	12.56	-33.33	-13.00	-20.33	H
5196.67	-34.21	13.10	16.32	-37.43	-13.00	-24.43	H
6929.79	-32.82	12.33	21.13	-41.62	-13.00	-28.62	H
3464.74	-34.66	12.90	12.56	-34.32	-13.00	-21.32	V
5196.67	-34.92	13.10	16.32	-38.14	-13.00	-25.14	V
6929.79	-31.80	12.33	21.13	-40.60	-13.00	-27.60	V
LTE Band 4 / 5MHz / QPSK / RB Size 1 Offset 0/ The Worst Test Results for Highest							
Frequency(MHz)	S G.Lev (dBm)	Ant(dBi)	Loss	PMea (dBm)	Limit （dBm）	Margin (dBm)	Polarity
3505.21	-34.42	12.90	12.56	-34.08	-13.00	-21.08	H
5257.10	-34.82	13.10	16.32	-38.04	-13.00	-25.04	H
7009.75	-32.31	12.33	21.13	-41.11	-13.00	-28.11	H
3505.21	-35.63	12.90	12.56	-35.29	-13.00	-22.29	V
5257.10	-34.83	13.10	16.32	-38.05	-13.00	-25.05	V
7009.75	-33.16	12.33	21.13	-41.96	-13.00	-28.96	V

LTE Band 4 / 10MHz / QPSK / RB Size 1 Offset 0/ The Worst Test Results for Lowest							
Frequency(MHz)	S G.Lev (dBm)	Ant(dBi)	Loss	PMea (dBm)	Limit （dBm）	Margin (dBm)	Polarity
3429.79	-34.57	12.90	12.56	-34.23	-13.00	-21.23	H
5145.09	-34.01	13.10	16.32	-37.23	-13.00	-24.23	H
6860.47	-33.08	12.33	21.13	-41.88	-13.00	-28.88	H
3429.79	-35.97	12.90	12.56	-35.63	-13.00	-22.63	V
5145.09	-34.04	13.10	16.32	-37.26	-13.00	-24.26	V
6860.47	-32.21	12.33	21.13	-41.01	-13.00	-28.01	V
LTE Band 4 / 10MHz / QPSK / RB Size 1 Offset 0/ The Worst Test Results for Middle							
Frequency(MHz)	S G.Lev (dBm)	Ant(dBi)	Loss	PMea (dBm)	Limit （dBm）	Margin (dBm)	Polarity
3464.80	-34.44	12.90	12.56	-34.10	-13.00	-21.10	H
5196.73	-34.89	13.10	16.32	-38.11	-13.00	-25.11	H
6929.78	-32.89	12.33	21.13	-41.69	-13.00	-28.69	H
3464.80	-34.62	12.90	12.56	-34.28	-13.00	-21.28	V
5196.73	-34.08	13.10	16.32	-37.30	-13.00	-24.30	V
6929.78	-31.92	12.33	21.13	-40.72	-13.00	-27.72	V
LTE Band 4 / 10MHz / QPSK / RB Size 1 Offset 0/ The Worst Test Results for Highest							
Frequency(MHz)	S G.Lev (dBm)	Ant(dBi)	Loss	PMea (dBm)	Limit （dBm）	Margin (dBm)	Polarity
3500.34	-33.86	12.90	12.56	-33.52	-13.00	-20.52	H
5250.30	-34.75	13.10	16.32	-37.97	-13.00	-24.97	H
6999.75	-32.21	12.33	21.13	-41.01	-13.00	-28.01	H
3500.34	-35.47	12.90	12.56	-35.13	-13.00	-22.13	V
5250.30	-33.96	13.10	16.32	-37.18	-13.00	-24.18	V
6999.75	-32.91	12.33	21.13	-41.71	-13.00	-28.71	V

LTE Band 4 / 15MHz / QPSK / RB Size 1 Offset 0/ The Worst Test Results for Lowest							
Frequency(MHz)	S G.Lev (dBm)	Ant(dBi)	Loss	PMea (dBm)	Limit （dBm）	Margin (dBm)	Polarity
3434.91	-34.87	12.90	12.56	-34.53	-13.00	-21.53	H
5152.53	-34.80	13.10	16.32	-38.02	-13.00	-25.02	H
6870.44	-33.60	12.33	21.13	-42.40	-13.00	-29.40	H
3434.91	-35.58	12.90	12.56	-35.24	-13.00	-22.24	V
5152.53	-34.01	13.10	16.32	-37.23	-13.00	-24.23	V
6870.44	-32.29	12.33	21.13	-41.09	-13.00	-28.09	V
LTE Band 4 / 15MHz / QPSK / RB Size 1 Offset 0/ The Worst Test Results for Middle							
Frequency(MHz)	S G.Lev (dBm)	Ant(dBi)	Loss	PMea (dBm)	Limit （dBm）	Margin (dBm)	Polarity
3464.66	-34.21	12.90	12.56	-33.87	-13.00	-20.87	H
5196.56	-34.80	13.10	16.32	-38.02	-13.00	-25.02	H
6929.86	-33.64	12.33	21.13	-42.44	-13.00	-29.44	H
3464.66	-35.71	12.90	12.56	-35.37	-13.00	-22.37	V
5196.56	-34.99	13.10	16.32	-38.21	-13.00	-25.21	V
6929.86	-31.96	12.33	21.13	-40.76	-13.00	-27.76	V
LTE Band 4 / 15MHz / QPSK / RB Size 1 Offset 0/ The Worst Test Results for Highest							
Frequency(MHz)	S G.Lev (dBm)	Ant(dBi)	Loss	PMea (dBm)	Limit （dBm）	Margin (dBm)	Polarity
3495.47	-34.39	12.90	12.56	-34.05	-13.00	-21.05	H
5242.25	-35.00	13.10	16.32	-38.22	-13.00	-25.22	H
6989.92	-32.35	12.33	21.13	-41.15	-13.00	-28.15	H
3495.47	-34.61	12.90	12.56	-34.27	-13.00	-21.27	V
5242.25	-34.35	13.10	16.32	-37.57	-13.00	-24.57	V
6989.92	-32.27	12.33	21.13	-41.07	-13.00	-28.07	V

LTE Band 4 / 20MHz / QPSK / RB Size 1 Offset 0/ The Worst Test Results for Lowest							
Frequency(MHz)	S G.Lev (dBm)	Ant(dBi)	Loss	PMea (dBm)	Limit （dBm）	Margin (dBm)	Polarity
3439.96	-34.49	12.90	12.56	-34.15	-13.00	-21.15	H
5159.86	-34.88	13.10	16.32	-38.10	-13.00	-25.10	H
6880.39	-32.82	12.33	21.13	-41.62	-13.00	-28.62	H
3439.96	-35.94	12.90	12.56	-35.60	-13.00	-22.60	V
5159.86	-34.80	13.10	16.32	-38.02	-13.00	-25.02	V
6880.39	-33.17	12.33	21.13	-41.97	-13.00	-28.97	V
LTE Band 4 / 20MHz / QPSK / RB Size 1 Offset 0/ The Worst Test Results for Middle							
Frequency(MHz)	S G.Lev (dBm)	Ant(dBi)	Loss	PMea (dBm)	Limit （dBm）	Margin (dBm)	Polarity
3465.01	-34.83	12.90	12.56	-34.49	-13.00	-21.49	H
5196.41	-35.16	13.10	16.32	-38.38	-13.00	-25.38	H
6929.79	-33.09	12.33	21.13	-41.89	-13.00	-28.89	H
3465.01	-35.65	12.90	12.56	-35.31	-13.00	-22.31	V
5196.41	-35.05	13.10	16.32	-38.27	-13.00	-25.27	V
6929.79	-32.22	12.33	21.13	-41.02	-13.00	-28.02	V
LTE Band 4 / 20MHz / QPSK / RB Size 1 Offset 0/ The Worst Test Results for Highest							
Frequency(MHz)	S G.Lev (dBm)	Ant(dBi)	Loss	PMea (dBm)	Limit （dBm）	Margin (dBm)	Polarity
3490.21	-34.18	12.90	12.56	-33.84	-13.00	-20.84	H
5234.90	-34.35	13.10	16.32	-37.57	-13.00	-24.57	H
6979.55	-32.39	12.33	21.13	-41.19	-13.00	-28.19	H
3490.21	-35.47	12.90	12.56	-35.13	-13.00	-22.13	V
5234.90	-34.79	13.10	16.32	-38.01	-13.00	-25.01	V
6979.55	-33.08	12.33	21.13	-41.88	-13.00	-28.88	V

LTE Band 5 / 1.4MHz / QPSK / RB Size 1 Offset 0/ The Worst Test Results for Lowest							
Frequency(MHz)	S G.Lev (dBm)	Ant(dBi)	Loss	PMea (dBm)	Limit （dBm）	Margin (dBm)	Polarity
1648.75	-34.21	9.56	9.72	-34.37	-13.00	-21.37	H
2473.67	-34.69	10.50	10.86	-35.05	-13.00	-22.05	H
3298.43	-32.50	12.78	11.57	-31.29	-13.00	-18.29	H
1648.75	-34.64	9.56	9.72	-34.80	-13.00	-21.80	V
2473.67	-33.86	10.50	10.86	-34.22	-13.00	-21.22	V
3298.43	-32.05	12.78	11.57	-30.84	-13.00	-17.84	V
LTE Band 5 / 1.4MHz / QPSK / RB Size 1 Offset 0/ The Worst Test Results for Middle							
Frequency(MHz)	S G.Lev (dBm)	Ant(dBi)	Loss	PMea (dBm)	Limit （dBm）	Margin (dBm)	Polarity
1672.80	-34.47	9.56	9.72	-34.63	-13.00	-21.63	H
2509.26	-34.26	10.50	10.86	-34.62	-13.00	-21.62	H
3345.64	-33.08	12.78	11.57	-31.87	-13.00	-18.87	H
1672.80	-35.17	9.56	9.72	-35.33	-13.00	-22.33	V
2509.26	-35.03	10.50	10.86	-35.39	-13.00	-22.39	V
3345.64	-32.41	12.78	11.57	-31.20	-13.00	-18.20	V
LTE Band 5 / 1.4MHz / QPSK / RB Size 1 Offset 0/ The Worst Test Results for Highest							
Frequency(MHz)	S G.Lev (dBm)	Ant(dBi)	Loss	PMea (dBm)	Limit （dBm）	Margin (dBm)	Polarity
1696.16	-34.19	9.56	9.72	-34.35	-13.00	-21.35	H
2544.52	-34.92	10.50	10.86	-35.28	-13.00	-22.28	H
3392.80	-33.10	12.78	11.57	-31.89	-13.00	-18.89	H
1696.16	-35.68	9.56	9.72	-35.84	-13.00	-22.84	V
2544.52	-34.78	10.50	10.86	-35.14	-13.00	-22.14	V
3392.80	-32.77	12.78	11.57	-31.56	-13.00	-18.56	V

LTE Band 5 / 3MHz / QPSK / RB Size 1 Offset 0/ The Worst Test Results for Lowest							
Frequency(MHz)	S G.Lev (dBm)	Ant(dBi)	Loss	PMea (dBm)	Limit （dBm）	Margin (dBm)	Polarity
1650.35	-34.36	9.56	9.72	-34.52	-13.00	-21.52	H
2475.81	-34.89	10.50	10.86	-35.25	-13.00	-22.25	H
3301.70	-33.55	12.78	11.57	-32.34	-13.00	-19.34	H
1650.35	-35.66	9.56	9.72	-35.82	-13.00	-22.82	V
2475.81	-33.88	10.50	10.86	-34.24	-13.00	-21.24	V
3301.70	-32.82	12.78	11.57	-31.61	-13.00	-18.61	V
LTE Band 5 / 3MHz / QPSK / RB Size 1 Offset 0/ The Worst Test Results for Middle							
Frequency(MHz)	S G.Lev (dBm)	Ant(dBi)	Loss	PMea (dBm)	Limit （dBm）	Margin (dBm)	Polarity
1672.42	-34.25	9.56	9.72	-34.41	-13.00	-21.41	H
2508.83	-34.21	10.50	10.86	-34.57	-13.00	-21.57	H
3345.56	-32.36	12.78	11.57	-31.15	-13.00	-18.15	H
1672.42	-35.22	9.56	9.72	-35.38	-13.00	-22.38	V
2508.83	-34.02	10.50	10.86	-34.38	-13.00	-21.38	V
3345.56	-31.80	12.78	11.57	-30.59	-13.00	-17.59	V
LTE Band 5 / 3MHz / QPSK / RB Size 1 Offset 0/ The Worst Test Results for Highest							
Frequency(MHz)	S G.Lev (dBm)	Ant(dBi)	Loss	PMea (dBm)	Limit （dBm）	Margin (dBm)	Polarity
1694.56	-34.79	9.56	9.72	-34.95	-13.00	-21.95	H
2541.70	-35.04	10.50	10.86	-35.40	-13.00	-22.40	H
3389.07	-32.22	12.78	11.57	-31.01	-13.00	-18.01	H
1694.56	-35.81	9.56	9.72	-35.97	-13.00	-22.97	V
2541.70	-35.09	10.50	10.86	-35.45	-13.00	-22.45	V
3389.07	-33.04	12.78	11.57	-31.83	-13.00	-18.83	V

LTE Band 5 / 5MHz / QPSK / RB Size 1 Offset 0/ The Worst Test Results for Lowest							
Frequency(MHz)	S G.Lev (dBm)	Ant(dBi)	Loss	PMea (dBm)	Limit （dBm）	Margin (dBm)	Polarity
1652.64	-33.68	9.56	9.72	-33.84	-13.00	-20.84	H
2478.95	-35.19	10.50	10.86	-35.55	-13.00	-22.55	H
3305.34	-33.37	12.78	11.57	-32.16	-13.00	-19.16	H
1652.64	-35.17	9.56	9.72	-35.33	-13.00	-22.33	V
2478.95	-34.99	10.50	10.86	-35.35	-13.00	-22.35	V
3305.34	-32.79	12.78	11.57	-31.58	-13.00	-18.58	V
LTE Band 5 / 5MHz / QPSK / RB Size 1 Offset 0/ The Worst Test Results for Middle							
Frequency(MHz)	S G.Lev (dBm)	Ant(dBi)	Loss	PMea (dBm)	Limit （dBm）	Margin (dBm)	Polarity
1672.27	-34.80	9.56	9.72	-34.96	-13.00	-21.96	H
2508.63	-34.92	10.50	10.86	-35.28	-13.00	-22.28	H
3345.39	-33.04	12.78	11.57	-31.83	-13.00	-18.83	H
1672.27	-35.53	9.56	9.72	-35.69	-13.00	-22.69	V
2508.63	-35.15	10.50	10.86	-35.51	-13.00	-22.51	V
3345.39	-31.88	12.78	11.57	-30.67	-13.00	-17.67	V
LTE Band 5 / 5MHz / QPSK / RB Size 1 Offset 0/ The Worst Test Results for Highest							
Frequency(MHz)	S G.Lev (dBm)	Ant(dBi)	Loss	PMea (dBm)	Limit （dBm）	Margin (dBm)	Polarity
1692.26	-33.65	9.56	9.72	-33.81	-13.00	-20.81	H
2538.80	-35.05	10.50	10.86	-35.41	-13.00	-22.41	H
3385.87	-33.45	12.78	11.57	-32.24	-13.00	-19.24	H
1692.26	-35.36	9.56	9.72	-35.52	-13.00	-22.52	V
2538.80	-34.01	10.50	10.86	-34.37	-13.00	-21.37	V
3385.87	-31.82	12.78	11.57	-30.61	-13.00	-17.61	V

LTE Band 5 / 10MHz / QPSK / RB Size 1 Offset 0/ The Worst Test Results for Lowest							
Frequency(MHz)	S G.Lev (dBm)	Ant(dBi)	Loss	PMea (dBm)	Limit （dBm）	Margin (dBm)	Polarity
1657.81	-34.52	9.56	9.72	-34.68	-13.00	-21.68	H
2486.19	-35.21	10.50	10.86	-35.57	-13.00	-22.57	H
3315.20	-32.71	12.78	11.57	-31.50	-13.00	-18.50	H
1657.81	-35.21	9.56	9.72	-35.37	-13.00	-22.37	V
2486.19	-33.77	10.50	10.86	-34.13	-13.00	-21.13	V
3315.20	-32.74	12.78	11.57	-31.53	-13.00	-18.53	V
LTE Band 5 / 10MHz / QPSK / RB Size 1 Offset 0/ The Worst Test Results for Middle							
Frequency(MHz)	S G.Lev (dBm)	Ant(dBi)	Loss	PMea (dBm)	Limit （dBm）	Margin (dBm)	Polarity
1672.23	-34.64	9.56	9.72	-34.80	-13.00	-21.80	H
2508.69	-34.07	10.50	10.86	-34.43	-13.00	-21.43	H
3345.33	-32.45	12.78	11.57	-31.24	-13.00	-18.24	H
1672.23	-35.17	9.56	9.72	-35.33	-13.00	-22.33	V
2508.69	-34.90	10.50	10.86	-35.26	-13.00	-22.26	V
3345.33	-32.77	12.78	11.57	-31.56	-13.00	-18.56	V
LTE Band 5 / 10MHz / QPSK / RB Size 1 Offset 0/ The Worst Test Results for Highest							
Frequency(MHz)	S G.Lev (dBm)	Ant(dBi)	Loss	PMea (dBm)	Limit （dBm）	Margin (dBm)	Polarity
1687.31	-33.90	9.56	9.72	-34.06	-13.00	-21.06	H
2531.52	-34.53	10.50	10.86	-34.89	-13.00	-21.89	H
3375.78	-32.99	12.78	11.57	-31.78	-13.00	-18.78	H
1687.31	-35.72	9.56	9.72	-35.88	-13.00	-22.88	V
2531.52	-34.00	10.50	10.86	-34.36	-13.00	-21.36	V
3375.78	-33.15	12.78	11.57	-31.94	-13.00	-18.94	V

LTE Band 12 / 1.4MHz / QPSK / RB Size 1 Offset 0/ The Worst Test Results for Lowest							
Frequency(MHz)	S G.Lev (dBm)	Ant(dBi)	Loss	PMea (dBm)	Limit （dBm）	Margin (dBm)	Polarity
1398.92	-33.65	8.17	9.34	-34.82	-13.00	-21.82	H
2098.60	-34.73	9.53	10.42	-35.62	-13.00	-22.62	H
2798.48	-33.65	11.27	11.12	-33.50	-13.00	-20.50	H
1398.92	-35.83	8.17	9.34	-37.00	-13.00	-24.00	V
2098.60	-34.38	9.53	10.42	-35.27	-13.00	-22.27	V
2798.48	-32.69	11.27	11.12	-32.54	-13.00	-19.54	V
LTE Band 12 / 1.4MHz / QPSK / RB Size 1 Offset 0/ The Worst Test Results for Middle							
Frequency(MHz)	S G.Lev (dBm)	Ant(dBi)	Loss	PMea (dBm)	Limit （dBm）	Margin (dBm)	Polarity
1414.92	-34.62	8.17	9.34	-35.79	-13.00	-22.79	H
2122.50	-34.68	9.53	10.42	-35.57	-13.00	-22.57	H
2829.81	-32.61	11.27	11.12	-32.46	-13.00	-19.46	H
1414.92	-35.20	8.17	9.34	-36.37	-13.00	-23.37	V
2122.50	-34.62	9.53	10.42	-35.51	-13.00	-22.51	V
2829.81	-32.48	11.27	11.12	-32.33	-13.00	-19.33	V
LTE Band 12 / 1.4MHz / QPSK / RB Size 1 Offset 0/ The Worst Test Results for Highest							
Frequency(MHz)	S G.Lev (dBm)	Ant(dBi)	Loss	PMea (dBm)	Limit （dBm）	Margin (dBm)	Polarity
1430.14	-33.88	8.17	9.34	-35.05	-13.00	-22.05	H
2145.68	-35.01	9.53	10.42	-35.90	-13.00	-22.90	H
2860.84	-32.29	11.27	11.12	-32.14	-13.00	-19.14	H
1430.14	-34.53	8.17	9.34	-35.70	-13.00	-22.70	V
2145.68	-34.45	9.53	10.42	-35.34	-13.00	-22.34	V
2860.84	-32.59	11.27	11.12	-32.44	-13.00	-19.44	V

LTE Band 12 / 3MHz / QPSK / RB Size 1 Offset 0/ The Worst Test Results for Lowest							
Frequency(MHz)	S G.Lev (dBm)	Ant(dBi)	Loss	PMea (dBm)	Limit （dBm）	Margin (dBm)	Polarity
1400.99	-33.82	8.17	9.34	-34.99	-13.00	-21.99	H
2101.39	-34.35	9.53	10.42	-35.24	-13.00	-22.24	H
2801.79	-32.42	11.27	11.12	-32.27	-13.00	-19.27	H
1400.99	-34.61	8.17	9.34	-35.78	-13.00	-22.78	V
2101.39	-33.83	9.53	10.42	-34.72	-13.00	-21.72	V
2801.79	-32.38	11.27	11.12	-32.23	-13.00	-19.23	V
LTE Band 12 / 3MHz / QPSK / RB Size 1 Offset 0/ The Worst Test Results for Middle							
Frequency(MHz)	S G.Lev (dBm)	Ant(dBi)	Loss	PMea (dBm)	Limit （dBm）	Margin (dBm)	Polarity
1414.83	-34.42	8.17	9.34	-35.59	-13.00	-22.59	H
2122.39	-34.26	9.53	10.42	-35.15	-13.00	-22.15	H
2829.83	-32.58	11.27	11.12	-32.43	-13.00	-19.43	H
1414.83	-34.71	8.17	9.34	-35.88	-13.00	-22.88	V
2122.39	-35.21	9.53	10.42	-36.10	-13.00	-23.10	V
2829.83	-32.17	11.27	11.12	-32.02	-13.00	-19.02	V
LTE Band 12 / 3MHz / QPSK / RB Size 1 Offset 0/ The Worst Test Results for Highest							
Frequency(MHz)	S G.Lev (dBm)	Ant(dBi)	Loss	PMea (dBm)	Limit （dBm）	Margin (dBm)	Polarity
1428.77	-33.55	8.17	9.34	-34.72	-13.00	-21.72	H
2143.32	-34.16	9.53	10.42	-35.05	-13.00	-22.05	H
2857.75	-33.00	11.27	11.12	-32.85	-13.00	-19.85	H
1428.77	-35.39	8.17	9.34	-36.56	-13.00	-23.56	V
2143.32	-35.08	9.53	10.42	-35.97	-13.00	-22.97	V
2857.75	-31.96	11.27	11.12	-31.81	-13.00	-18.81	V

LTE Band 12 / 5MHz / QPSK / RB Size 1 Offset 0/ The Worst Test Results for Lowest							
Frequency(MHz)	S G.Lev (dBm)	Ant(dBi)	Loss	PMea (dBm)	Limit （dBm）	Margin (dBm)	Polarity
1402.98	-34.41	8.17	9.34	-35.58	-13.00	-22.58	H
2104.15	-34.28	9.53	10.42	-35.17	-13.00	-22.17	H
2805.87	-33.33	11.27	11.12	-33.18	-13.00	-20.18	H
1402.98	-35.72	8.17	9.34	-36.89	-13.00	-23.89	V
2104.15	-34.85	9.53	10.42	-35.74	-13.00	-22.74	V
2805.87	-32.13	11.27	11.12	-31.98	-13.00	-18.98	V
LTE Band 12 / 5MHz / QPSK / RB Size 1 Offset 0/ The Worst Test Results for Middle							
Frequency(MHz)	S G.Lev (dBm)	Ant(dBi)	Loss	PMea (dBm)	Limit （dBm）	Margin (dBm)	Polarity
1414.71	-34.20	8.17	9.34	-35.37	-13.00	-22.37	H
2122.26	-34.06	9.53	10.42	-34.95	-13.00	-21.95	H
2829.89	-33.06	11.27	11.12	-32.91	-13.00	-19.91	H
1414.71	-34.64	8.17	9.34	-35.81	-13.00	-22.81	V
2122.26	-34.91	9.53	10.42	-35.80	-13.00	-22.80	V
2829.89	-31.79	11.27	11.12	-31.64	-13.00	-18.64	V
LTE Band 12 / 5MHz / QPSK / RB Size 1 Offset 0/ The Worst Test Results for Highest							
Frequency(MHz)	S G.Lev (dBm)	Ant(dBi)	Loss	PMea (dBm)	Limit （dBm）	Margin (dBm)	Polarity
1426.79	-34.32	8.17	9.34	-35.49	-13.00	-22.49	H
2140.14	-35.42	9.53	10.42	-36.31	-13.00	-23.31	H
2853.75	-33.46	11.27	11.12	-33.31	-13.00	-20.31	H
1426.79	-34.70	8.17	9.34	-35.87	-13.00	-22.87	V
2140.14	-34.03	9.53	10.42	-34.92	-13.00	-21.92	V
2853.75	-32.23	11.27	11.12	-32.08	-13.00	-19.08	V

LTE Band 12 / 10MHz / QPSK / RB Size 1 Offset 0/ The Worst Test Results for Lowest							
Frequency(MHz)	S G.Lev (dBm)	Ant(dBi)	Loss	PMea (dBm)	Limit （dBm）	Margin (dBm)	Polarity
1407.60	-33.63	8.17	9.34	-34.80	-13.00	-21.80	H
2111.71	-34.70	9.53	10.42	-35.59	-13.00	-22.59	H
2815.75	-32.95	11.27	11.12	-32.80	-13.00	-19.80	H
1407.60	-35.38	8.17	9.34	-36.55	-13.00	-23.55	V
2111.71	-34.83	9.53	10.42	-35.72	-13.00	-22.72	V
2815.75	-32.11	11.27	11.12	-31.96	-13.00	-18.96	V
LTE Band 12 / 10MHz / QPSK / RB Size 1 Offset 0/ The Worst Test Results for Middle							
Frequency(MHz)	S G.Lev (dBm)	Ant(dBi)	Loss	PMea (dBm)	Limit （dBm）	Margin (dBm)	Polarity
1414.62	-34.78	8.17	9.34	-35.95	-13.00	-22.95	H
2122.44	-34.39	9.53	10.42	-35.28	-13.00	-22.28	H
2829.72	-32.22	11.27	11.12	-32.07	-13.00	-19.07	H
1414.62	-34.64	8.17	9.34	-35.81	-13.00	-22.81	V
2122.44	-34.89	9.53	10.42	-35.78	-13.00	-22.78	V
2829.72	-32.57	11.27	11.12	-32.42	-13.00	-19.42	V
LTE Band 12 / 10MHz / QPSK / RB Size 1 Offset 0/ The Worst Test Results for Highest							
Frequency(MHz)	S G.Lev (dBm)	Ant(dBi)	Loss	PMea (dBm)	Limit （dBm）	Margin (dBm)	Polarity
1421.54	-34.74	8.17	9.34	-35.91	-13.00	-22.91	H
2132.88	-34.22	9.53	10.42	-35.11	-13.00	-22.11	H
2843.90	-32.83	11.27	11.12	-32.68	-13.00	-19.68	H
1421.54	-35.36	8.17	9.34	-36.53	-13.00	-23.53	V
2132.88	-34.44	9.53	10.42	-35.33	-13.00	-22.33	V
2843.90	-32.90	11.27	11.12	-32.75	-13.00	-19.75	V

LTE Band 13 / 5MHz / QPSK / RB Size 1 Offset 0/ The Worst Test Results for Lowest							
Frequency(MHz)	S G.Lev (dBm)	Ant(dBi)	Loss	PMea (dBm)	Limit （dBm）	Margin (dBm)	Polarity
1559.31	-47.96	9.56	9.72	-48.12	-40.00	-8.12	H
2338.44	-46.93	10.50	10.86	-47.29	-13.00	-34.29	H
3118.01	-45.76	12.78	11.57	-44.55	-13.00	-31.55	H
1559.31	-48.94	9.56	9.72	-49.10	-40.00	-9.10	V
2338.44	-46.39	10.50	10.86	-46.75	-13.00	-33.75	V
3118.01	-46.20	12.78	11.57	-44.99	-13.00	-31.99	V
LTE Band 13 / 5MHz / QPSK / RB Size 1 Offset 0/ The Worst Test Results for Middle							
Frequency(MHz)	S G.Lev (dBm)	Ant(dBi)	Loss	PMea (dBm)	Limit （dBm）	Margin (dBm)	Polarity
1564.30	-47.75	9.56	9.72	-47.91	-40.00	-7.91	H
2346.06	-46.97	10.50	10.86	-47.33	-13.00	-34.33	H
3127.89	-46.53	12.78	11.57	-45.32	-13.00	-32.32	H
1564.30	-48.82	9.56	9.72	-48.98	-40.00	-8.98	V
2346.06	-46.66	10.50	10.86	-47.02	-13.00	-34.02	V
3127.89	-45.47	12.78	11.57	-44.26	-13.00	-31.26	V
LTE Band 13 / 5MHz / QPSK / RB Size 1 Offset 0/ The Worst Test Results for Highest							
Frequency(MHz)	S G.Lev (dBm)	Ant(dBi)	Loss	PMea (dBm)	Limit （dBm）	Margin (dBm)	Polarity
1568.91	-47.75	9.56	9.72	-47.91	-40.00	-7.91	H
2353.16	-46.09	10.50	10.86	-46.45	-13.00	-33.45	H
3138.25	-45.73	12.78	11.57	-44.52	-13.00	-31.52	H
1568.91	-47.65	9.56	9.72	-47.81	-40.00	-7.81	V
2353.16	-46.76	10.50	10.86	-47.12	-13.00	-34.12	V
3138.25	-45.69	12.78	11.57	-44.48	-13.00	-31.48	V

LTE Band 13 / 10MHz / QPSK / RB Size 1 Offset 0/ The Worst Test Results for Middle							
Frequency(MHz)	S G.Lev (dBm)	Ant(dBi)	Loss	PMea (dBm)	Limit （dBm）	Margin (dBm)	Polarity
1564.06	-48.20	9.56	9.72	-48.36	-40.00	-8.36	H
2346.23	-47.37	10.50	10.86	-47.73	-13.00	-34.73	H
3127.78	-45.52	12.78	11.57	-44.31	-13.00	-31.31	H
1564.06	-47.74	9.56	9.72	-47.90	-40.00	-7.90	V
2346.23	-47.34	10.50	10.86	-47.70	-13.00	-34.70	V
3127.78	-46.44	12.78	11.57	-45.23	-13.00	-32.23	V

LTE Band 25 / 5MHz / QPSK / RB Size 1 Offset 0/ The Worst Test Results for Lowest							
Frequency(MHz)	S G.Lev (dBm)	Ant(dBi)	Loss	PMea (dBm)	Limit （dBm）	Margin (dBm)	Polarity
3705.12	-34.57	12.60	12.93	-34.90	-13.00	-21.90	H
5557.53	-35.05	13.10	17.11	-39.06	-13.00	-26.06	H
7410.02	-32.34	11.50	22.20	-43.04	-13.00	-30.04	H
3705.12	-35.48	12.60	12.93	-35.81	-13.00	-22.81	V
5557.53	-35.12	13.10	17.11	-39.13	-13.00	-26.13	V
7410.02	-32.30	11.50	22.20	-43.00	-13.00	-30.00	V
LTE Band 25 / 5MHz / QPSK / RB Size 1 Offset 0/ The Worst Test Results for Middle							
Frequency(MHz)	S G.Lev (dBm)	Ant(dBi)	Loss	PMea (dBm)	Limit （dBm）	Margin (dBm)	Polarity
3764.97	-33.96	12.60	12.93	-34.29	-13.00	-21.29	H
5647.10	-35.14	13.10	17.11	-39.15	-13.00	-26.15	H
7529.98	-32.33	11.50	22.20	-43.03	-13.00	-30.03	H
3764.97	-35.08	12.60	12.93	-35.41	-13.00	-22.41	V
5647.10	-34.94	13.10	17.11	-38.95	-13.00	-25.95	V
7529.98	-32.16	11.50	22.20	-42.86	-13.00	-29.86	V
LTE Band 25 / 5MHz / QPSK / RB Size 1 Offset 0/ The Worst Test Results for Highest							
Frequency(MHz)	S G.Lev (dBm)	Ant(dBi)	Loss	PMea (dBm)	Limit （dBm）	Margin (dBm)	Polarity
3825.16	-34.27	12.60	12.93	-34.60	-13.00	-21.60	H
5737.10	-34.01	13.10	17.11	-38.02	-13.00	-25.02	H
7650.66	-32.99	11.50	22.20	-43.69	-13.00	-30.69	H
3825.16	-35.04	12.60	12.93	-35.37	-13.00	-22.37	V
5737.10	-35.04	13.10	17.11	-39.05	-13.00	-26.05	V
7650.66	-32.74	11.50	22.20	-43.44	-13.00	-30.44	V

LTE Band 25 / 15MHz / QPSK / RB Size 1 Offset 0/ The Worst Test Results for Lowest							
Frequency(MHz)	S G.Lev (dBm)	Ant(dBi)	Loss	PMea (dBm)	Limit （dBm）	Margin (dBm)	Polarity
3715.03	-34.90	12.60	12.93	-35.23	-13.00	-22.23	H
5572.18	-35.11	13.10	17.11	-39.12	-13.00	-26.12	H
7430.79	-33.20	11.50	22.20	-43.90	-13.00	-30.90	H
3715.03	-34.72	12.60	12.93	-35.05	-13.00	-22.05	V
5572.18	-35.25	13.10	17.11	-39.26	-13.00	-26.26	V
7430.79	-32.27	11.50	22.20	-42.97	-13.00	-29.97	V
LTE Band 25 / 15MHz / QPSK / RB Size 1 Offset 0/ The Worst Test Results for Middle							
Frequency(MHz)	S G.Lev (dBm)	Ant(dBi)	Loss	PMea (dBm)	Limit （dBm）	Margin (dBm)	Polarity
3765.11	-33.61	12.60	12.93	-33.94	-13.00	-20.94	H
5647.24	-34.88	13.10	17.11	-38.89	-13.00	-25.89	H
7430.21	-33.59	11.50	22.20	-44.29	-13.00	-31.29	H
3765.11	-34.99	12.60	12.93	-35.32	-13.00	-22.32	V
5647.24	-34.64	13.10	17.11	-38.65	-13.00	-25.65	V
7430.21	-32.68	11.50	22.20	-43.38	-13.00	-30.38	V
LTE Band 25 / 15MHz / QPSK / RB Size 1 Offset 0/ The Worst Test Results for Highest							
Frequency(MHz)	S G.Lev (dBm)	Ant(dBi)	Loss	PMea (dBm)	Limit （dBm）	Margin (dBm)	Polarity
3815.41	-34.79	12.60	12.93	-35.12	-13.00	-22.12	H
5722.18	-35.24	13.10	17.11	-39.25	-13.00	-26.25	H
7630.51	-33.21	11.50	22.20	-43.91	-13.00	-30.91	H
3815.41	-34.93	12.60	12.93	-35.26	-13.00	-22.26	V
5722.18	-34.11	13.10	17.11	-38.12	-13.00	-25.12	V
7630.51	-32.41	11.50	22.20	-43.11	-13.00	-30.11	V

LTE Band 26(Part 22) / 1.4MHz / QPSK / RB Size 1 Offset 0/ The Worst Test Results for Lowest							
Frequency(MHz)	S G.Lev (dBm)	Ant(dBi)	Loss	PMea (dBm)	Limit （dBm）	Margin (dBm)	Polarity
1649.26	-34.38	9.56	9.72	-34.54	-13.00	-21.54	H
2473.39	-34.11	10.50	10.86	-34.47	-13.00	-21.47	H
3298.79	-32.73	12.78	11.57	-31.52	-13.00	-18.52	H
1649.26	-35.86	9.56	9.72	-36.02	-13.00	-23.02	V
2473.39	-35.09	10.50	10.86	-35.45	-13.00	-22.45	V
3298.79	-32.03	12.78	11.57	-30.82	-13.00	-17.82	V
LTE Band 26(Part 22) / 1.4MHz / QPSK / RB Size 1 Offset 0/ The Worst Test Results for Middle							
Frequency(MHz)	S G.Lev (dBm)	Ant(dBi)	Loss	PMea (dBm)	Limit （dBm）	Margin (dBm)	Polarity
1672.92	-34.46	9.56	9.72	-34.62	-13.00	-21.62	H
2509.21	-35.17	10.50	10.86	-35.53	-13.00	-22.53	H
3345.84	-32.63	12.78	11.57	-31.42	-13.00	-18.42	H
1672.92	-35.08	9.56	9.72	-35.24	-13.00	-22.24	V
2509.21	-34.41	10.50	10.86	-34.77	-13.00	-21.77	V
3345.84	-32.08	12.78	11.57	-30.87	-13.00	-17.87	V
LTE Band 26(Part 22) / 1.4MHz / QPSK / RB Size 1 Offset 0/ The Worst Test Results for Highest							
Frequency(MHz)	S G.Lev (dBm)	Ant(dBi)	Loss	PMea (dBm)	Limit （dBm）	Margin (dBm)	Polarity
1696.31	-33.44	9.56	9.72	-33.60	-13.00	-20.60	H
2544.71	-35.05	10.50	10.86	-35.41	-13.00	-22.41	H
3392.74	-33.29	12.78	11.57	-32.08	-13.00	-19.08	H
1696.31	-34.98	9.56	9.72	-35.14	-13.00	-22.14	V
2544.71	-35.00	10.50	10.86	-35.36	-13.00	-22.36	V
3392.74	-32.34	12.78	11.57	-31.13	-13.00	-18.13	V

LTE Band 26(Part 22) / 3MHz / QPSK / RB Size 1 Offset 0/ The Worst Test Results for Lowest							
Frequency(MHz)	S G.Lev (dBm)	Ant(dBi)	Loss	PMea (dBm)	Limit （dBm）	Margin (dBm)	Polarity
1651.14	-34.10	9.56	9.72	-34.26	-13.00	-21.26	H
2476.47	-34.03	10.50	10.86	-34.39	-13.00	-21.39	H
3301.78	-33.23	12.78	11.57	-32.02	-13.00	-19.02	H
1651.14	-34.85	9.56	9.72	-35.01	-13.00	-22.01	V
2476.47	-34.72	10.50	10.86	-35.08	-13.00	-22.08	V
3301.78	-32.64	12.78	11.57	-31.43	-13.00	-18.43	V
LTE Band 26(Part 22) / 3MHz / QPSK / RB Size 1 Offset 0/ The Worst Test Results for Middle							
Frequency(MHz)	S G.Lev (dBm)	Ant(dBi)	Loss	PMea (dBm)	Limit （dBm）	Margin (dBm)	Polarity
1672.99	-33.97	9.56	9.72	-34.13	-13.00	-21.13	H
2508.94	-35.31	10.50	10.86	-35.67	-13.00	-22.67	H
3345.93	-33.32	12.78	11.57	-32.11	-13.00	-19.11	H
1672.99	-34.81	9.56	9.72	-34.97	-13.00	-21.97	V
2508.94	-34.09	10.50	10.86	-34.45	-13.00	-21.45	V
3345.93	-32.16	12.78	11.57	-30.95	-13.00	-17.95	V
LTE Band 26(Part 22) / 3MHz / QPSK / RB Size 1 Offset 0/ The Worst Test Results for Highest							
Frequency(MHz)	S G.Lev (dBm)	Ant(dBi)	Loss	PMea (dBm)	Limit （dBm）	Margin (dBm)	Polarity
1695.44	-33.60	9.56	9.72	-33.76	-13.00	-20.76	H
2542.09	-35.40	10.50	10.86	-35.76	-13.00	-22.76	H
3390.17	-32.19	12.78	11.57	-30.98	-13.00	-17.98	H
1695.44	-35.36	9.56	9.72	-35.52	-13.00	-22.52	V
2542.09	-34.30	10.50	10.86	-34.66	-13.00	-21.66	V
3390.17	-32.09	12.78	11.57	-30.88	-13.00	-17.88	V

LTE Band 26(Part 22) / 5MHz / QPSK / RB Size 1 Offset 0/ The Worst Test Results for Lowest							
Frequency(MHz)	S G.Lev (dBm)	Ant(dBi)	Loss	PMea (dBm)	Limit （dBm）	Margin (dBm)	Polarity
1652.61	-33.81	9.56	9.72	-33.97	-13.00	-20.97	H
2479.19	-34.51	10.50	10.86	-34.87	-13.00	-21.87	H
3306.47	-32.56	12.78	11.57	-31.35	-13.00	-18.35	H
1652.61	-35.46	9.56	9.72	-35.62	-13.00	-22.62	V
2479.19	-34.94	10.50	10.86	-35.30	-13.00	-22.30	V
3306.47	-32.71	12.78	11.57	-31.50	-13.00	-18.50	V
LTE Band 26(Part 22) / 5MHz / QPSK / RB Size 1 Offset 0/ The Worst Test Results for Middle							
Frequency(MHz)	S G.Lev (dBm)	Ant(dBi)	Loss	PMea (dBm)	Limit （dBm）	Margin (dBm)	Polarity
1673.10	-34.54	9.56	9.72	-34.70	-13.00	-21.70	H
2508.95	-34.16	10.50	10.86	-34.52	-13.00	-21.52	H
3346.17	-33.21	12.78	11.57	-32.00	-13.00	-19.00	H
1673.10	-35.20	9.56	9.72	-35.36	-13.00	-22.36	V
2508.95	-35.05	10.50	10.86	-35.41	-13.00	-22.41	V
3346.17	-32.27	12.78	11.57	-31.06	-13.00	-18.06	V
LTE Band 26(Part 22) / 5MHz / QPSK / RB Size 1 Offset 0/ The Worst Test Results for Highest							
Frequency(MHz)	S G.Lev (dBm)	Ant(dBi)	Loss	PMea (dBm)	Limit （dBm）	Margin (dBm)	Polarity
1693.43	-33.61	9.56	9.72	-33.77	-13.00	-20.77	H
2539.36	-34.00	10.50	10.86	-34.36	-13.00	-21.36	H
3386.30	-32.17	12.78	11.57	-30.96	-13.00	-17.96	H
1693.43	-35.29	9.56	9.72	-35.45	-13.00	-22.45	V
2539.36	-33.75	10.50	10.86	-34.11	-13.00	-21.11	V
3386.30	-32.64	12.78	11.57	-31.43	-13.00	-18.43	V

LTE Band 26(Part 22) / 10MHz / QPSK / RB Size 1 Offset 0/ The Worst Test Results for Lowest							
Frequency(MHz)	S G.Lev (dBm)	Ant(dBi)	Loss	PMea (dBm)	Limit （dBm）	Margin (dBm)	Polarity
1657.99	-33.78	9.56	9.72	-33.94	-13.00	-20.94	H
2486.18	-35.04	10.50	10.86	-35.40	-13.00	-22.40	H
3315.49	-32.78	12.78	11.57	-31.57	-13.00	-18.57	H
1657.99	-35.05	9.56	9.72	-35.21	-13.00	-22.21	V
2486.18	-35.07	10.50	10.86	-35.43	-13.00	-22.43	V
3315.49	-32.25	12.78	11.57	-31.04	-13.00	-18.04	V
LTE Band 26(Part 22) / 10MHz / QPSK / RB Size 1 Offset 0/ The Worst Test Results for Middle							
Frequency(MHz)	S G.Lev (dBm)	Ant(dBi)	Loss	PMea (dBm)	Limit （dBm）	Margin (dBm)	Polarity
1673.15	-34.85	9.56	9.72	-35.01	-13.00	-22.01	H
2508.93	-34.50	10.50	10.86	-34.86	-13.00	-21.86	H
3345.93	-32.86	12.78	11.57	-31.65	-13.00	-18.65	H
1673.15	-35.82	9.56	9.72	-35.98	-13.00	-22.98	V
2508.93	-34.74	10.50	10.86	-35.10	-13.00	-22.10	V
3345.93	-32.44	12.78	11.57	-31.23	-13.00	-18.23	V
LTE Band 26(Part 22) / 10MHz / QPSK / RB Size 1 Offset 0/ The Worst Test Results for Highest							
Frequency(MHz)	S G.Lev (dBm)	Ant(dBi)	Loss	PMea (dBm)	Limit （dBm）	Margin (dBm)	Polarity
1688.58	-33.81	9.56	9.72	-33.97	-13.00	-20.97	H
2532.33	-34.87	10.50	10.86	-35.23	-13.00	-22.23	H
3376.00	-32.96	12.78	11.57	-31.75	-13.00	-18.75	H
1688.58	-35.39	9.56	9.72	-35.55	-13.00	-22.55	V
2532.33	-33.95	10.50	10.86	-34.31	-13.00	-21.31	V
3376.00	-32.05	12.78	11.57	-30.84	-13.00	-17.84	V

LTE Band 26(Part 22) / 15MHz / QPSK / RB Size 1 Offset 0/ The Worst Test Results for Lowest							
Frequency(MHz)	S G.Lev (dBm)	Ant(dBi)	Loss	PMea (dBm)	Limit （dBm）	Margin (dBm)	Polarity
1663.38	-33.76	9.56	9.72	-33.92	-13.00	-20.92	H
2494.24	-34.18	10.50	10.86	-34.54	-13.00	-21.54	H
3325.85	-32.25	12.78	11.57	-31.04	-13.00	-18.04	H
1663.38	-34.75	9.56	9.72	-34.91	-13.00	-21.91	V
2494.24	-34.48	10.50	10.86	-34.84	-13.00	-21.84	V
3325.85	-31.83	12.78	11.57	-30.62	-13.00	-17.62	V
LTE Band 26(Part 22) / 15MHz / QPSK / RB Size 1 Offset 0/ The Worst Test Results for Middle							
Frequency(MHz)	S G.Lev (dBm)	Ant(dBi)	Loss	PMea (dBm)	Limit （dBm）	Margin (dBm)	Polarity
1672.90	-33.76	9.56	9.72	-33.92	-13.00	-20.92	H
2509.07	-35.24	10.50	10.86	-35.60	-13.00	-22.60	H
3346.00	-33.07	12.78	11.57	-31.86	-13.00	-18.86	H
1672.90	-35.05	9.56	9.72	-35.21	-13.00	-22.21	V
2509.07	-35.13	10.50	10.86	-35.49	-13.00	-22.49	V
3346.00	-32.85	12.78	11.57	-31.64	-13.00	-18.64	V
LTE Band 26(Part 22) / 15MHz / QPSK / RB Size 1 Offset 0/ The Worst Test Results for Highest							
Frequency(MHz)	S G.Lev (dBm)	Ant(dBi)	Loss	PMea (dBm)	Limit （dBm）	Margin (dBm)	Polarity
1683.56	-33.50	9.56	9.72	-33.66	-13.00	-20.66	H
2524.47	-35.36	10.50	10.86	-35.72	-13.00	-22.72	H
3366.36	-33.20	12.78	11.57	-31.99	-13.00	-18.99	H
1683.56	-34.97	9.56	9.72	-35.13	-13.00	-22.13	V
2524.47	-33.87	10.50	10.86	-34.23	-13.00	-21.23	V
3366.36	-33.03	12.78	11.57	-31.82	-13.00	-18.82	V

LTE Band 26(Part 90) / 1.4MHz / QPSK / RB Size 1 Offset 0/ The Worst Test Results for Lowest							
Frequency(MHz)	S G.Lev (dBm)	Ant(dBi)	Loss	PMea (dBm)	Limit （dBm）	Margin (dBm)	Polarity
1629.28	-33.62	9.56	9.72	-33.78	-13.00	-20.78	H
2443.72	-35.05	10.50	10.86	-35.41	-13.00	-22.41	H
3258.63	-33.56	12.78	11.57	-32.35	-13.00	-19.35	H
1629.28	-35.21	9.56	9.72	-35.37	-13.00	-22.37	V
2443.72	-34.80	10.50	10.86	-35.16	-13.00	-22.16	V
3258.63	-31.77	12.78	11.57	-30.56	-13.00	-17.56	V
LTE Band 26(Part 90) / 1.4MHz / QPSK / RB Size 1 Offset 0/ The Worst Test Results for Middle							
Frequency(MHz)	S G.Lev (dBm)	Ant(dBi)	Loss	PMea (dBm)	Limit （dBm）	Margin (dBm)	Polarity
1638.24	-34.84	9.56	9.72	-35.00	-13.00	-22.00	H
2456.87	-35.01	10.50	10.86	-35.37	-13.00	-22.37	H
3275.98	-33.44	12.78	11.57	-32.23	-13.00	-19.23	H
1638.24	-34.64	9.56	9.72	-34.80	-13.00	-21.80	V
2456.87	-34.29	10.50	10.86	-34.65	-13.00	-21.65	V
3275.98	-31.76	12.78	11.57	-30.55	-13.00	-17.55	V
LTE Band 26(Part 90) / 1.4MHz / QPSK / RB Size 1 Offset 0/ The Worst Test Results for Highest							
Frequency(MHz)	S G.Lev (dBm)	Ant(dBi)	Loss	PMea (dBm)	Limit （dBm）	Margin (dBm)	Polarity
1646.23	-34.55	9.56	9.72	-34.71	-13.00	-21.71	H
2456.61	-35.08	10.50	10.86	-35.44	-13.00	-22.44	H
3257.95	-33.48	12.78	11.57	-32.27	-13.00	-19.27	H
1646.23	-34.55	9.56	9.72	-34.71	-13.00	-21.71	V
2456.61	-34.69	10.50	10.86	-35.05	-13.00	-22.05	V
3257.95	-33.03	12.78	11.57	-31.82	-13.00	-18.82	V

LTE Band 26(Part 90) / 3MHz / QPSK / RB Size 1 Offset 0/ The Worst Test Results for Lowest							
Frequency(MHz)	S G.Lev (dBm)	Ant(dBi)	Loss	PMea (dBm)	Limit （dBm）	Margin (dBm)	Polarity
1631.12	-34.16	9.56	9.72	-34.32	-13.00	-21.32	H
2446.28	-35.30	10.50	10.86	-35.66	-13.00	-22.66	H
3261.57	-32.58	12.78	11.57	-31.37	-13.00	-18.37	H
1631.12	-35.69	9.56	9.72	-35.85	-13.00	-22.85	V
2446.28	-34.01	10.50	10.86	-34.37	-13.00	-21.37	V
3261.57	-32.98	12.78	11.57	-31.77	-13.00	-18.77	V
LTE Band 26(Part 90) / 3MHz / QPSK / RB Size 1 Offset 0/ The Worst Test Results for Middle							
Frequency(MHz)	S G.Lev (dBm)	Ant(dBi)	Loss	PMea (dBm)	Limit （dBm）	Margin (dBm)	Polarity
1637.85	-33.55	9.56	9.72	-33.71	-13.00	-20.71	H
2457.12	-35.42	10.50	10.86	-35.78	-13.00	-22.78	H
3276.29	-33.22	12.78	11.57	-32.01	-13.00	-19.01	H
1637.85	-35.62	9.56	9.72	-35.78	-13.00	-22.78	V
2457.12	-34.80	10.50	10.86	-35.16	-13.00	-22.16	V
3276.29	-31.92	12.78	11.57	-30.71	-13.00	-17.71	V
LTE Band 26(Part 90) / 3MHz / QPSK / RB Size 1 Offset 0/ The Worst Test Results for Highest							
Frequency(MHz)	S G.Lev (dBm)	Ant(dBi)	Loss	PMea (dBm)	Limit （dBm）	Margin (dBm)	Polarity
1644.91	-34.00	9.56	9.72	-34.16	-13.00	-21.16	H
2467.35	-35.10	10.50	10.86	-35.46	-13.00	-22.46	H
3276.21	-32.84	12.78	11.57	-31.63	-13.00	-18.63	H
1644.91	-35.95	9.56	9.72	-36.11	-13.00	-23.11	V
2467.35	-34.95	10.50	10.86	-35.31	-13.00	-22.31	V
3276.21	-32.39	12.78	11.57	-31.18	-13.00	-18.18	V

LTE Band 26(Part 90) / 5MHz / QPSK / RB Size 1 Offset 0/ The Worst Test Results for Lowest							
Frequency(MHz)	S G.Lev (dBm)	Ant(dBi)	Loss	PMea (dBm)	Limit （dBm）	Margin (dBm)	Polarity
1632.85	-33.74	9.56	9.72	-33.90	-13.00	-20.90	H
2449.65	-34.00	10.50	10.86	-34.36	-13.00	-21.36	H
3266.56	-32.72	12.78	11.57	-31.51	-13.00	-18.51	H
1632.85	-35.18	9.56	9.72	-35.34	-13.00	-22.34	V
2449.65	-34.04	10.50	10.86	-34.40	-13.00	-21.40	V
3266.56	-32.46	12.78	11.57	-31.25	-13.00	-18.25	V
LTE Band 26(Part 90) / 5MHz / QPSK / RB Size 1 Offset 0/ The Worst Test Results for Middle							
Frequency(MHz)	S G.Lev (dBm)	Ant(dBi)	Loss	PMea (dBm)	Limit （dBm）	Margin (dBm)	Polarity
1637.84	-34.30	9.56	9.72	-34.46	-13.00	-21.46	H
2456.95	-35.30	10.50	10.86	-35.66	-13.00	-22.66	H
3275.94	-32.63	12.78	11.57	-31.42	-13.00	-18.42	H
1637.84	-34.63	9.56	9.72	-34.79	-13.00	-21.79	V
2456.95	-33.84	10.50	10.86	-34.20	-13.00	-21.20	V
3275.94	-32.96	12.78	11.57	-31.75	-13.00	-18.75	V
LTE Band 26(Part 90) / 5MHz / QPSK / RB Size 1 Offset 0/ The Worst Test Results for Highest							
Frequency(MHz)	S G.Lev (dBm)	Ant(dBi)	Loss	PMea (dBm)	Limit （dBm）	Margin (dBm)	Polarity
1642.75	-33.85	9.56	9.72	-34.01	-13.00	-21.01	H
2464.31	-34.81	10.50	10.86	-35.17	-13.00	-22.17	H
3285.83	-33.53	12.78	11.57	-32.32	-13.00	-19.32	H
1642.75	-35.32	9.56	9.72	-35.48	-13.00	-22.48	V
2464.31	-34.65	10.50	10.86	-35.01	-13.00	-22.01	V
3285.83	-33.03	12.78	11.57	-31.82	-13.00	-18.82	V

LTE Band 26(Part 90) / 10MHz / QPSK / RB Size 1 Offset 0/ The Worst Test Results for Middle							
Frequency(MHz)	S G.Lev (dBm)	Ant(dBi)	Loss	PMea (dBm)	Limit （dBm）	Margin (dBm)	Polarity
1638.05	-33.60	9.56	9.72	-33.76	-13.00	-20.76	H
2456.94	-34.84	10.50	10.86	-35.20	-13.00	-22.20	H
3275.93	-32.71	12.78	11.57	-31.50	-13.00	-18.50	H
1638.05	-35.72	9.56	9.72	-35.88	-13.00	-22.88	V
2456.94	-33.98	10.50	10.86	-34.34	-13.00	-21.34	V
3275.93	-32.42	12.78	11.57	-31.21	-13.00	-18.21	V

LTE Band 41 / 5MHz / QPSK / RB Size 1 Offset 0/ The Worst Test Results for Lowest							
Frequency(MHz)	S G.Lev (dBm)	Ant(dBi)	Loss	PMea (dBm)	Limit （dBm）	Margin (dBm)	Polarity
4997.16	-33.82	12.66	15.86	-37.02	-25.00	-12.02	H
7495.96	-35.20	11.46	19.28	-43.02	-25.00	-18.02	H
9994.36	-32.35	12.79	23.19	-42.75	-25.00	-17.75	H
4997.05	-35.93	12.66	15.86	-39.13	-25.00	-14.13	V
7495.86	-34.60	11.46	19.28	-42.42	-25.00	-17.42	V
9994.12	-32.00	12.79	23.19	-42.40	-25.00	-17.40	V
LTE Band 41 / 5MHz / QPSK / RB Size 1 Offset 0/ The Worst Test Results for Middle							
Frequency(MHz)	S G.Lev (dBm)	Ant(dBi)	Loss	PMea (dBm)	Limit （dBm）	Margin (dBm)	Polarity
5186.42	-34.12	12.72	15.86	-37.26	-25.00	-12.26	H
7779.10	-34.28	11.46	19.28	-42.10	-25.00	-17.10	H
10372.22	-33.09	12.09	23.19	-44.19	-25.00	-19.19	H
5186.42	-34.63	12.72	15.86	-37.77	-25.00	-12.77	V
7779.10	-34.07	11.46	19.28	-41.89	-25.00	-16.89	V
10372.22	-32.15	12.09	23.19	-43.25	-25.00	-18.25	V
LTE Band 41 / 5MHz / QPSK / RB Size 1 Offset 0/ The Worst Test Results for Highest							
Frequency(MHz)	S G.Lev (dBm)	Ant(dBi)	Loss	PMea (dBm)	Limit （dBm）	Margin (dBm)	Polarity
5374.92	-34.07	12.76	15.86	-37.17	-25.00	-12.17	H
8062.06	-35.42	11.45	19.28	-43.25	-25.00	-18.25	H
10750.16	-32.96	12.28	23.19	-43.87	-25.00	-18.87	H
5374.92	-35.51	12.76	15.86	-38.61	-25.00	-13.61	V
8062.06	-34.65	11.45	19.28	-42.48	-25.00	-17.48	V
10750.16	-32.00	12.28	23.19	-42.91	-25.00	-17.91	V

LTE Band 41 / 10MHz / QPSK / RB Size 1 Offset 0/ The Worst Test Results for Lowest							
Frequency(MHz)	S G.Lev (dBm)	Ant(dBi)	Loss	PMea (dBm)	Limit （dBm）	Margin (dBm)	Polarity
5002.58	-34.79	12.66	15.86	-37.99	-25.00	-12.99	H
7503.28	-35.46	11.46	19.28	-43.28	-25.00	-18.28	H
10004.33	-32.22	12.79	23.19	-42.62	-25.00	-17.62	H
5002.58	-34.60	12.66	15.86	-37.80	-25.00	-12.80	V
7503.28	-34.28	11.46	19.28	-42.10	-25.00	-17.10	V
10004.33	-32.63	12.79	23.19	-43.03	-25.00	-18.03	V
LTE Band 41 / 10MHz / QPSK / RB Size 1 Offset 0/ The Worst Test Results for Middle							
Frequency(MHz)	S G.Lev (dBm)	Ant(dBi)	Loss	PMea (dBm)	Limit （dBm）	Margin (dBm)	Polarity
5186.79	-34.66	12.72	15.86	-37.80	-25.00	-12.80	H
7779.59	-34.36	11.46	19.28	-42.18	-25.00	-17.18	H
10371.23	-32.48	12.09	23.19	-43.58	-25.00	-18.58	H
5186.79	-35.45	12.72	15.86	-38.59	-25.00	-13.59	V
7779.59	-35.17	11.46	19.28	-42.99	-25.00	-17.99	V
10371.23	-32.78	12.09	23.19	-43.88	-25.00	-18.88	V
LTE Band 41 / 10MHz / QPSK / RB Size 1 Offset 0/ The Worst Test Results for Highest							
Frequency(MHz)	S G.Lev (dBm)	Ant(dBi)	Loss	PMea (dBm)	Limit （dBm）	Margin (dBm)	Polarity
5370.40	-33.92	12.76	15.86	-37.02	-25.00	-12.02	H
8055.96	-34.48	11.45	19.28	-42.31	-25.00	-17.31	H
10740.17	-32.76	12.28	23.19	-43.67	-25.00	-18.67	H
5370.40	-35.60	12.76	15.86	-38.70	-25.00	-13.70	V
8055.96	-35.05	11.45	19.28	-42.88	-25.00	-17.88	V
10740.17	-32.90	12.28	23.19	-43.81	-25.00	-18.81	V

LTE Band 41 / 15MHz / QPSK / RB Size 1 Offset 0/ The Worst Test Results for Lowest							
Frequency(MHz)	S G.Lev (dBm)	Ant(dBi)	Loss	PMea (dBm)	Limit （dBm）	Margin (dBm)	Polarity
5007.20	-34.29	12.66	15.86	-37.49	-25.00	-12.49	H
7510.12	-34.82	11.46	19.28	-42.64	-25.00	-17.64	H
10014.68	-32.62	12.79	23.19	-43.02	-25.00	-18.02	H
5007.20	-35.16	12.66	15.86	-38.36	-25.00	-13.36	V
7510.12	-34.72	11.46	19.28	-42.54	-25.00	-17.54	V
10014.68	-32.36	12.79	23.19	-42.76	-25.00	-17.76	V
LTE Band 41 / 15MHz / QPSK / RB Size 1 Offset 0/ The Worst Test Results for Middle							
Frequency(MHz)	S G.Lev (dBm)	Ant(dBi)	Loss	PMea (dBm)	Limit （dBm）	Margin (dBm)	Polarity
5185.95	-34.44	12.72	15.86	-37.58	-25.00	-12.58	H
7778.92	-34.16	11.46	19.28	-41.98	-25.00	-16.98	H
10372.49	-32.94	12.09	23.19	-44.04	-25.00	-19.04	H
5185.95	-35.17	12.72	15.86	-38.31	-25.00	-13.31	V
7778.92	-34.89	11.46	19.28	-42.71	-25.00	-17.71	V
10372.49	-32.05	12.09	23.19	-43.15	-25.00	-18.15	V
LTE Band 41 / 15MHz / QPSK / RB Size 1 Offset 0/ The Worst Test Results for Highest							
Frequency(MHz)	S G.Lev (dBm)	Ant(dBi)	Loss	PMea (dBm)	Limit （dBm）	Margin (dBm)	Polarity
5365.40	-34.89	12.76	15.86	-37.99	-25.00	-12.99	H
8046.98	-34.24	11.45	19.28	-42.07	-25.00	-17.07	H
10730.24	-33.13	12.28	23.19	-44.04	-25.00	-19.04	H
5365.40	-34.90	12.76	15.86	-38.00	-25.00	-13.00	V
8046.98	-34.12	11.45	19.28	-41.95	-25.00	-16.95	V
10730.24	-33.03	12.28	23.19	-43.94	-25.00	-18.94	V

LTE Band 41 / 20MHz / QPSK / RB Size 1 Offset 0/ The Worst Test Results for Lowest							
Frequency(MHz)	S G.Lev (dBm)	Ant(dBi)	Loss	PMea (dBm)	Limit （dBm）	Margin (dBm)	Polarity
5012.01	-33.67	12.66	15.86	-36.87	-25.00	-11.87	H
7518.23	-35.47	11.46	19.28	-43.29	-25.00	-18.29	H
10024.28	-33.22	12.79	23.19	-43.62	-25.00	-18.62	H
5012.01	-35.06	12.66	15.86	-38.26	-25.00	-13.26	V
7518.23	-34.59	11.46	19.28	-42.41	-25.00	-17.41	V
10024.28	-32.76	12.79	23.19	-43.16	-25.00	-18.16	V
LTE Band 41 /20MHz / QPSK / RB Size 1 Offset 0/ The Worst Test Results for Middle							
Frequency(MHz)	S G.Lev (dBm)	Ant(dBi)	Loss	PMea (dBm)	Limit （dBm）	Margin (dBm)	Polarity
5186.00	-34.62	12.72	15.86	-37.76	-25.00	-12.76	H
7779.13	-34.97	11.46	19.28	-42.79	-25.00	-17.79	H
10372.16	-33.23	12.09	23.19	-44.33	-25.00	-19.33	H
5186.00	-35.85	12.72	15.86	-38.99	-25.00	-13.99	V
7779.13	-33.84	11.46	19.28	-41.66	-25.00	-16.66	V
10372.16	-31.90	12.09	23.19	-43.00	-25.00	-18.00	V
LTE Band 41 / 20MHz / QPSK / RB Size 1 Offset 0/ The Worst Test Results for Highest							
Frequency(MHz)	S G.Lev (dBm)	Ant(dBi)	Loss	PMea (dBm)	Limit （dBm）	Margin (dBm)	Polarity
5359.69	-33.50	12.76	15.86	-36.60	-25.00	-11.60	H
8040.17	-34.30	11.45	19.28	-42.13	-25.00	-17.13	H
10720.31	-32.48	12.28	23.19	-43.39	-25.00	-18.39	H
5359.69	-35.86	12.76	15.86	-38.96	-25.00	-13.96	V
8040.17	-35.06	11.45	19.28	-42.89	-25.00	-17.89	V
10720.31	-32.13	12.28	23.19	-43.04	-25.00	-18.04	V

LTE Band 66 / 1.4MHz / QPSK / RB Size 1 Offset 0/ The Worst Test Results for Lowest							
Frequency(MHz)	S G.Lev (dBm)	Ant(dBi)	Loss	PMea (dBm)	Limit （dBm）	Margin (dBm)	Polarity
3421.03	-33.68	12.90	12.56	-33.34	-13.00	-20.34	H
5132.09	-34.16	13.10	16.32	-37.38	-13.00	-24.38	H
6842.49	-33.09	12.33	21.13	-41.89	-13.00	-28.89	H
3421.03	-35.04	12.90	12.56	-34.70	-13.00	-21.70	V
5132.09	-34.68	13.10	16.32	-37.90	-13.00	-24.90	V
6842.49	-33.10	12.33	21.13	-41.90	-13.00	-28.90	V
LTE Band 66 / 1.4MHz / QPSK / RB Size 1 Offset 0/ The Worst Test Results for Middle							
Frequency(MHz)	S G.Lev (dBm)	Ant(dBi)	Loss	PMea (dBm)	Limit （dBm）	Margin (dBm)	Polarity
3489.98	-34.79	12.90	12.56	-34.45	-13.00	-21.45	H
5235.14	-34.81	13.10	16.32	-38.03	-13.00	-25.03	H
6980.21	-32.92	12.33	21.13	-41.72	-13.00	-28.72	H
3489.98	-35.17	12.90	12.56	-34.83	-13.00	-21.83	V
5235.14	-34.17	13.10	16.32	-37.39	-13.00	-24.39	V
6980.21	-32.42	12.33	21.13	-41.22	-13.00	-28.22	V
LTE Band 66 / 1.4MHz / QPSK / RB Size 1 Offset 0/ The Worst Test Results for Highest							
Frequency(MHz)	S G.Lev (dBm)	Ant(dBi)	Loss	PMea (dBm)	Limit （dBm）	Margin (dBm)	Polarity
3558.06	-34.56	12.90	12.56	-34.22	-13.00	-21.22	H
5337.04	-35.18	13.10	16.32	-38.40	-13.00	-25.40	H
7116.90	-33.25	12.33	21.13	-42.05	-13.00	-29.05	H
3558.06	-35.27	12.90	12.56	-34.93	-13.00	-21.93	V
5337.04	-33.86	13.10	16.32	-37.08	-13.00	-24.08	V
7116.90	-33.05	12.33	21.13	-41.85	-13.00	-28.85	V

LTE Band 66 / 3MHz / QPSK / RB Size 1 Offset 0/ The Worst Test Results for Lowest							
Frequency(MHz)	S G.Lev (dBm)	Ant(dBi)	Loss	PMea (dBm)	Limit （dBm）	Margin (dBm)	Polarity
3423.24	-34.93	12.90	12.56	-34.59	-13.00	-21.59	H
5134.48	-35.48	13.10	16.32	-38.70	-13.00	-25.70	H
6846.11	-33.22	12.33	21.13	-42.02	-13.00	-29.02	H
3423.24	-34.97	12.90	12.56	-34.63	-13.00	-21.63	V
5134.48	-33.94	13.10	16.32	-37.16	-13.00	-24.16	V
6846.11	-32.05	12.33	21.13	-40.85	-13.00	-27.85	V
LTE Band 66 / 3MHz / QPSK / RB Size 1 Offset 0/ The Worst Test Results for Middle							
Frequency(MHz)	S G.Lev (dBm)	Ant(dBi)	Loss	PMea (dBm)	Limit （dBm）	Margin (dBm)	Polarity
3490.17	-34.90	12.90	12.56	-34.56	-13.00	-21.56	H
5235.26	-35.06	13.10	16.32	-38.28	-13.00	-25.28	H
6980.10	-33.31	12.33	21.13	-42.11	-13.00	-29.11	H
3490.17	-35.06	12.90	12.56	-34.72	-13.00	-21.72	V
5235.26	-34.39	13.10	16.32	-37.61	-13.00	-24.61	V
6980.10	-32.96	12.33	21.13	-41.76	-13.00	-28.76	V
LTE Band 66 / 3MHz / QPSK / RB Size 1 Offset 0/ The Worst Test Results for Highest							
Frequency(MHz)	S G.Lev (dBm)	Ant(dBi)	Loss	PMea (dBm)	Limit （dBm）	Margin (dBm)	Polarity
3556.90	-34.55	12.90	12.56	-34.21	-13.00	-21.21	H
5262.36	-34.76	13.10	16.32	-37.98	-13.00	-24.98	H
7113.83	-32.91	12.33	21.13	-41.71	-13.00	-28.71	H
3556.90	-34.82	12.90	12.56	-34.48	-13.00	-21.48	V
5262.36	-34.73	13.10	16.32	-37.95	-13.00	-24.95	V
7113.83	-32.45	12.33	21.13	-41.25	-13.00	-28.25	V

LTE Band 66 / 5MHz / QPSK / RB Size 1 Offset 0/ The Worst Test Results for Lowest							
Frequency(MHz)	S G.Lev (dBm)	Ant(dBi)	Loss	PMea (dBm)	Limit （dBm）	Margin (dBm)	Polarity
3425.05	-33.47	12.90	12.56	-33.13	-13.00	-20.13	H
5137.29	-34.36	13.10	16.32	-37.58	-13.00	-24.58	H
6850.40	-32.91	12.33	21.13	-41.71	-13.00	-28.71	H
3425.05	-35.66	12.90	12.56	-35.32	-13.00	-22.32	V
5137.29	-34.50	13.10	16.32	-37.72	-13.00	-24.72	V
6850.40	-32.42	12.33	21.13	-41.22	-13.00	-28.22	V
LTE Band 66 / 5MHz / QPSK / RB Size 1 Offset 0/ The Worst Test Results for Middle							
Frequency(MHz)	S G.Lev (dBm)	Ant(dBi)	Loss	PMea (dBm)	Limit （dBm）	Margin (dBm)	Polarity
3489.83	-33.57	12.90	12.56	-33.23	-13.00	-20.23	H
5234.82	-35.05	13.10	16.32	-38.27	-13.00	-25.27	H
6979.93	-32.35	12.33	21.13	-41.15	-13.00	-28.15	H
3489.83	-35.23	12.90	12.56	-34.89	-13.00	-21.89	V
5234.82	-34.02	13.10	16.32	-37.24	-13.00	-24.24	V
6979.93	-32.24	12.33	21.13	-41.04	-13.00	-28.04	V
LTE Band 66 / 5MHz / QPSK / RB Size 1 Offset 0/ The Worst Test Results for Highest							
Frequency(MHz)	S G.Lev (dBm)	Ant(dBi)	Loss	PMea (dBm)	Limit （dBm）	Margin (dBm)	Polarity
3558.09	-33.71	12.90	12.56	-33.37	-13.00	-20.37	H
52353.99	-34.51	13.10	16.32	-37.73	-13.00	-24.73	H
7110.19	-32.21	12.33	21.13	-41.01	-13.00	-28.01	H
3558.09	-35.68	12.90	12.56	-35.34	-13.00	-22.34	V
52353.99	-34.80	13.10	16.32	-38.02	-13.00	-25.02	V
7110.19	-32.88	12.33	21.13	-41.68	-13.00	-28.68	V

LTE Band 66 / 10MHz / QPSK / RB Size 1 Offset 0/ The Worst Test Results for Lowest							
Frequency(MHz)	S G.Lev (dBm)	Ant(dBi)	Loss	PMea (dBm)	Limit （dBm）	Margin (dBm)	Polarity
3429.98	-33.52	12.90	12.56	-33.18	-13.00	-20.18	H
5144.84	-34.57	13.10	16.32	-37.79	-13.00	-24.79	H
6880.00	-32.90	12.33	21.13	-41.70	-13.00	-28.70	H
3429.98	-35.66	12.90	12.56	-35.32	-13.00	-22.32	V
5144.84	-35.19	13.10	16.32	-38.41	-13.00	-25.41	V
6880.00	-32.70	12.33	21.13	-41.50	-13.00	-28.50	V
LTE Band 66 / 10MHz / QPSK / RB Size 1 Offset 0/ The Worst Test Results for Middle							
Frequency(MHz)	S G.Lev (dBm)	Ant(dBi)	Loss	PMea (dBm)	Limit （dBm）	Margin (dBm)	Polarity
3490.16	-33.72	12.90	12.56	-33.38	-13.00	-20.38	H
5234.93	-33.99	13.10	16.32	-37.21	-13.00	-24.21	H
6980.06	-33.64	12.33	21.13	-42.44	-13.00	-29.44	H
3490.16	-35.58	12.90	12.56	-35.24	-13.00	-22.24	V
5234.93	-34.54	13.10	16.32	-37.76	-13.00	-24.76	V
6980.06	-32.90	12.33	21.13	-41.70	-13.00	-28.70	V
LTE Band 66 / 10MHz / QPSK / RB Size 1 Offset 0/ The Worst Test Results for Highest							
Frequency(MHz)	S G.Lev (dBm)	Ant(dBi)	Loss	PMea (dBm)	Limit （dBm）	Margin (dBm)	Polarity
3550.59	-34.11	12.90	12.56	-33.77	-13.00	-20.77	H
5235.51	-35.36	13.10	16.32	-38.58	-13.00	-25.58	H
7100.13	-33.30	12.33	21.13	-42.10	-13.00	-29.10	H
3550.59	-35.88	12.90	12.56	-35.54	-13.00	-22.54	V
5235.51	-33.79	13.10	16.32	-37.01	-13.00	-24.01	V
7100.13	-32.26	12.33	21.13	-41.06	-13.00	-28.06	V

LTE Band 66 / 15MHz / QPSK / RB Size 1 Offset 0/ The Worst Test Results for Lowest							
Frequency(MHz)	S G.Lev (dBm)	Ant(dBi)	Loss	PMea (dBm)	Limit （dBm）	Margin (dBm)	Polarity
3435.08	-34.19	12.90	12.56	-33.85	-13.00	-20.85	H
5152.24	-34.31	13.10	16.32	-37.53	-13.00	-24.53	H
6870.05	-33.00	12.33	21.13	-41.80	-13.00	-28.80	H
3435.08	-34.64	12.90	12.56	-34.30	-13.00	-21.30	V
5152.24	-35.02	13.10	16.32	-38.24	-13.00	-25.24	V
6870.05	-32.23	12.33	21.13	-41.03	-13.00	-28.03	V
LTE Band 66 /15MHz / QPSK / RB Size 1 Offset 0/ The Worst Test Results for Middle							
Frequency(MHz)	S G.Lev (dBm)	Ant(dBi)	Loss	PMea (dBm)	Limit （dBm）	Margin (dBm)	Polarity
3489.98	-34.74	12.90	12.56	-34.40	-13.00	-21.40	H
5235.02	-35.08	13.10	16.32	-38.30	-13.00	-25.30	H
6980.16	-32.71	12.33	21.13	-41.51	-13.00	-28.51	H
3489.98	-35.46	12.90	12.56	-35.12	-13.00	-22.12	V
5235.02	-34.85	13.10	16.32	-38.07	-13.00	-25.07	V
6980.16	-32.19	12.33	21.13	-40.99	-13.00	-27.99	V
LTE Band 66 / 15MHz / QPSK / RB Size 1 Offset 0/ The Worst Test Results for Highest							
Frequency(MHz)	S G.Lev (dBm)	Ant(dBi)	Loss	PMea (dBm)	Limit （dBm）	Margin (dBm)	Polarity
3544.84	-33.91	12.90	12.56	-33.57	-13.00	-20.57	H
5332.49	-34.72	13.10	16.32	-37.94	-13.00	-24.94	H
7090.06	-33.00	12.33	21.13	-41.80	-13.00	-28.80	H
3544.84	-34.99	12.90	12.56	-34.65	-13.00	-21.65	V
5332.49	-34.59	13.10	16.32	-37.81	-13.00	-24.81	V
7090.06	-32.76	12.33	21.13	-41.56	-13.00	-28.56	V

LTE Band 66 / 20MHz / QPSK / RB Size 1 Offset 0/ The Worst Test Results for Lowest							
Frequency(MHz)	S G.Lev (dBm)	Ant(dBi)	Loss	PMea (dBm)	Limit （dBm）	Margin (dBm)	Polarity
3440.13	-34.83	12.90	12.56	-34.49	-13.00	-21.49	H
5160.09	-34.19	13.10	16.32	-37.41	-13.00	-24.41	H
6879.77	-33.60	12.33	21.13	-42.40	-13.00	-29.40	H
3440.13	-34.72	12.90	12.56	-34.38	-13.00	-21.38	V
5160.09	-35.06	13.10	16.32	-38.28	-13.00	-25.28	V
6879.77	-31.93	12.33	21.13	-40.73	-13.00	-27.73	V
LTE Band 66 / 20MHz / QPSK / RB Size 1 Offset 0/ The Worst Test Results for Middle							
Frequency(MHz)	S G.Lev (dBm)	Ant(dBi)	Loss	PMea (dBm)	Limit （dBm）	Margin (dBm)	Polarity
3489.93	-34.22	12.90	12.56	-33.88	-13.00	-20.88	H
5234.85	-34.33	13.10	16.32	-37.55	-13.00	-24.55	H
6980.06	-33.33	12.33	21.13	-42.13	-13.00	-29.13	H
3489.93	-36.01	12.90	12.56	-35.67	-13.00	-22.67	V
5234.85	-35.23	13.10	16.32	-38.45	-13.00	-25.45	V
6980.06	-32.78	12.33	21.13	-41.58	-13.00	-28.58	V
LTE Band 66 / 20MHz / QPSK / RB Size 1 Offset 0/ The Worst Test Results for Highest							
Frequency(MHz)	S G.Lev (dBm)	Ant(dBi)	Loss	PMea (dBm)	Limit （dBm）	Margin (dBm)	Polarity
3540.00	-33.56	12.90	12.56	-33.22	-13.00	-20.22	H
5309.91	-35.33	13.10	16.32	-38.55	-13.00	-25.55	H
7080.93	-33.29	12.33	21.13	-42.09	-13.00	-29.09	H
3540.00	-34.99	12.90	12.56	-34.65	-13.00	-21.65	V
5309.91	-35.00	13.10	16.32	-38.22	-13.00	-25.22	V
7080.93	-32.77	12.33	21.13	-41.57	-13.00	-28.57	V

10. FREQUENCY STABILITY

10.1 DESCRIPTION OF FREQUENCY STABILITY MEASUREMENT

10.1.1 MEASUREMENT METHOD

The frequency stability shall be measured by variation of ambient temperature and variation of primary supply voltage to ensure that the fundamental emission stays within the authorized frequency block. The frequency stability of the transmitter shall be maintained within ±0.00025% (±2.5ppm) of the center frequency.

10.1.2 TEST SETUP

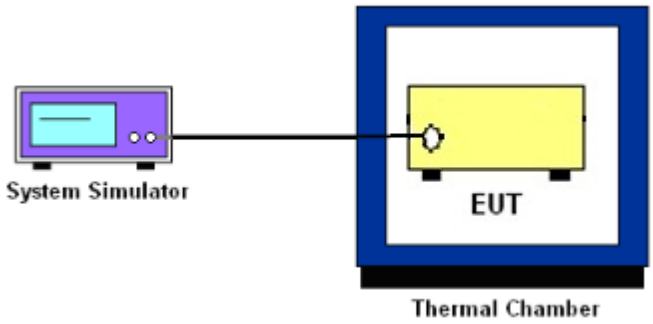

10.1.3 TEST PROCEDURES FOR TEMPERATURE VARIATION

1. The EUT was set up in the thermal chamber and connected with the system simulator.

2. With power OFF, the temperature was decreased to -30°C and the EUT was stabilized before testing. Power was applied and the maximum change in frequency was recorded within one minute.
3. With power OFF, the temperature was raised in 10°C step up to 50°C. The EUT was stabilized at each step for at least half an hour. Power was applied and the maximum frequency change was recorded within one minute.

10.1.4 TEST PROCEDURES FOR VOLTAGE VARIATION

1. The testing follows FCC KDB 971168 D01v01r03 Section 9.

2. The EUT was placed in a temperature chamber at 25±5° C and connected with the system simlator.

3. The power supply voltage to the EUT was varied from 85% to 115% of the nominal value measured at the input to the EUT.

4. The variation in frequency was measured for the worst case.

10.1.5 TEST RESULTS

LTE Band 2 (QPSK) / 1880MHz / BW10M					
Temperature (°C)	Voltage (Volt)	Freq. Dev. (Hz)	Freq. Dev. (ppm)	Limit	Result
50	Normal Voltage	33.73	0.018	2.5ppm	PASS
40		36.00	0.019		
30		29.78	0.016		
20		26.67	0.014		
10		34.00	0.018		
0		26.44	0.014		
-10		27.96	0.015		
-20		28.74	0.015		
-30		33.44	0.018		
25	Maximum Voltage	35.70	0.019		
25	BEP	33.01	0.018		

LTE Band 2 (QPSK) / 1880MHz / BW20M					
Temperature (°C)	Voltage (Volt)	Freq. Dev. (Hz)	Freq. Dev. (ppm)	Limit	Result
50	Normal Voltage	33.09	0.018	2.5ppm	PASS
40		21.84	0.012		
30		35.78	0.019		
20		11.96	0.006		
10		35.34	0.019		
0		20.40	0.011		
-10		28.65	0.015		
-20		32.62	0.017		
-30		22.15	0.012		
25	Maximum Voltage	28.98	0.015		
25	BEP	27.18	0.014		

LTE Band 4 (QPSK) / 1733MHz / BW10M					
Temperature (°C)	Voltage	Freq. Dev.	Freq. Dev.	Limit	Result
	(Volt)	(Hz)	(ppm)		
50	Normal Voltage	26.49	0.015	2.5ppm	PASS
40		21.40	0.012		
30		20.73	0.012		
20		33.68	0.019		
10		29.14	0.017		
0		21.53	0.012		
-10		29.17	0.017		
-20		29.73	0.017		
-30		34.16	0.020		
25	Maximum Voltage	36.47	0.021		
25	BEP	23.85	0.014		

LTE Band 4 (QPSK) / 1733MHz / BW20M					
Temperature (°C)	Voltage	Freq. Dev.	Freq. Dev.	Limit	Result
	(Volt)	(Hz)	(ppm)		
50	Normal Voltage	35.55	0.021	2.5ppm	PASS
40		20.43	0.012		
30		26.49	0.015		
20		32.40	0.019		
10		13.19	0.008		
0		12.67	0.007		
-10		22.14	0.013		
-20		22.28	0.013		
-30		13.62	0.008		
25	Maximum Voltage	13.55	0.008		
25	BEP	32.01	0.018		

LTE Band 5 (QPSK) / 836.5MHz / BW5M					
Temperature (°C)	Voltage	Freq. Dev.	Freq. Dev.	Limit	Result
	(Volt)	(Hz)	(ppm)		
50	Normal Voltage	12.32	0.017	2.5ppm	PASS
40		26.25	0.037		
30		12.99	0.018		
20		20.47	0.029		
10		30.13	0.042		
0		35.58	0.050		
-10		26.21	0.004		
-20		21.73	0.031		
-30		32.24	0.045		
25	Maximum Voltage	33.75	0.048		
25	BEP	25.17	0.035		

LTE Band 5 (QPSK) / 836.5MHz / BW10M					
Temperature (°C)	Voltage	Freq. Dev.	Freq. Dev.	Limit	Result
	(Volt)	(Hz)	(ppm)		
50	Normal Voltage	35.79	0.050	2.5ppm	PASS
40		30.06	0.042		
30		20.00	0.028		
20		23.78	0.033		
10		25.84	0.036		
0		33.85	0.048		
-10		30.62	0.004		
-20		16.80	0.024		
-30		13.66	0.019		
25	Maximum Voltage	25.12	0.035		
25	BEP	27.32	0.038		

LTE Band 12 (QPSK) / 707.5MHz / BW5M					
Temperature (°C)	Voltage	Freq. Dev.	Freq. Dev.	Limit	Result
	(Volt)	(Hz)	(ppm)		
50	Normal Voltage	22.78	0.032	2.5ppm	PASS
40		36.23	0.051		
30		13.97	0.020		
20		20.47	0.029		
10		34.86	0.049		
0		19.76	0.028		
-10		12.65	0.002		
-20		31.37	0.044		
-30		25.62	0.036		
25	Maximum Voltage	12.75	0.018		
25	BEP	16.67	0.023		

LTE Band 12 (QPSK) / 707.5MHz / BW10M					
Temperature (°C)	Voltage	Freq. Dev.	Freq. Dev.	Limit	Result
	(Volt)	(Hz)	(ppm)		
50	Normal Voltage	33.66	0.047	2.5ppm	PASS
40		26.70	0.038		
30		23.19	0.033		
20		33.97	0.048		
10		33.97	0.048		
0		22.92	0.032		
-10		12.50	0.002		
-20		28.76	0.041		
-30		19.04	0.027		
25	Maximum Voltage	33.05	0.047		
25	BEP	18.38	0.026		

LTE Band 13 (QPSK) / 782MHz / BW5M					
Temperature (°C)	Voltage	Freq. Dev.	Freq. Dev.	Limit	Result
	(Volt)	(Hz)	(ppm)		
50	Normal Voltage	22.65	0.032	2.5ppm	PASS
40		31.44	0.044		
30		19.62	0.028		
20		11.52	0.016		
10		34.94	0.049		
0		17.31	0.024		
-10		28.33	0.004		
-20		20.25	0.029		
-30		16.16	0.023		
25	Maximum Voltage	34.34	0.048		
25	BEP	12.89	0.018		

LTE Band 13 (QPSK) / 782MHz / BW10M					
Temperature (°C)	Voltage	Freq. Dev.	Freq. Dev.	Limit	Result
	(Volt)	(Hz)	(ppm)		
50	Normal Voltage	26.48	0.037	2.5ppm	PASS
40		28.27	0.040		
30		28.70	0.040		
20		25.76	0.036		
10		16.98	0.024		
0		16.29	0.023		
-10		11.55	0.002		
-20		13.43	0.019		
-30		33.19	0.047		
25	Maximum Voltage	20.29	0.029		
25	BEP	31.26	0.044		

LTE Band 25 (QPSK) / 1880MHz / BW10M					
Temperature (°C)	Voltage	Freq. Dev.	Freq. Dev.	Limit	Result
	(Volt)	(Hz)	(ppm)		
50	Normal Voltage	16.31	0.009	2.5ppm	PASS
40		18.84	0.010		
30		29.34	0.016		
20		27.66	0.015		
10		28.53	0.015		
0		26.90	0.014		
-10		31.87	0.017		
-20		16.50	0.009		
-30		35.14	0.019		
25	Maximum Voltage	24.68	0.013		
25	BEP	18.42	0.010		

LTE Band 25 (QPSK) / 1880MHz / BW20M					
Temperature (°C)	Voltage	Freq. Dev.	Freq. Dev.	Limit	Result
	(Volt)	(Hz)	(ppm)		
50	Normal Voltage	16.04	0.009	2.5ppm	PASS
40		22.66	0.012		
30		21.91	0.012		
20		25.69	0.014		
10		24.56	0.013		
0		11.65	0.006		
-10		22.96	0.012		
-20		15.93	0.008		
-30		23.04	0.012		
25	Maximum Voltage	22.77	0.012		
25	BEP	12.37	0.007		

LTE Band 26(Part 22) (QPSK) / 836.5MHz / BW10M					
Temperature (°C)	Voltage	Freq. Dev.	Freq. Dev.	Limit	Result
	(Volt)	(Hz)	(ppm)		
50	Normal Voltage	15.98	0.009	2.5ppm	PASS
40		26.85	0.015		
30		31.27	0.018		
20		23.55	0.014		
10		13.68	0.008		
0		34.21	0.020		
-10		20.48	0.012		
-20		13.69	0.008		
-30		34.26	0.020		
25	Maximum Voltage	35.43	0.020		
25	BEP	32.22	0.019		

LTE Band 26(Part 22) (QPSK) / 836.5MHz / BW20M					
Temperature (°C)	Voltage	Freq. Dev.	Freq. Dev.	Limit	Result
	(Volt)	(Hz)	(ppm)		
50	Normal Voltage	34.85	0.020	2.5ppm	PASS
40		28.33	0.016		
30		25.15	0.015		
20		31.33	0.018		
10		33.39	0.019		
0		20.21	0.012		
-10		35.93	0.021		
-20		33.73	0.019		
-30		20.87	0.012		
25	Maximum Voltage	29.60	0.017		
25	BEP	16.55	0.010		

LTE Band 26(Part 90) (QPSK) / 819MHz / BW5M					
Temperature (°C)	Voltage	Freq. Dev.	Freq. Dev.	Limit	Result
	(Volt)	(Hz)	(ppm)		
50	Normal Voltage	14.51	0.008	2.5ppm	PASS
40		26.63	0.015		
30		21.88	0.013		
20		11.88	0.007		
10		22.38	0.013		
0		36.46	0.021		
-10		15.83	0.009		
-20		33.60	0.019		
-30		25.36	0.015		
25	Maximum Voltage	23.69	0.014		
25	BEP	16.67	0.010		

LTE Band 26(Part 90) (QPSK) / 819MHz / BW10M					
Temperature (°C)	Voltage	Freq. Dev.	Freq. Dev.	Limit	Result
	(Volt)	(Hz)	(ppm)		
50	Normal Voltage	32.85	0.019	2.5ppm	PASS
40		32.09	0.019		
30		34.80	0.020		
20		15.09	0.009		
10		15.40	0.009		
0		20.84	0.012		
-10		17.75	0.010		
-20		18.20	0.011		
-30		27.32	0.016		
25	Maximum Voltage	21.34	0.012		
25	BEP	12.92	0.007		

LTE Band 41 (QPSK) / 2593MHz / BW10M					
Temperature (°C)	Voltage	Freq. Dev.	Freq. Dev.	Limit	Result
	(Volt)	(Hz)	(ppm)		
50	Normal Voltage	16.67	0.007	2.5ppm	PASS
40		13.06	0.005		
30		31.85	0.013		
20		16.21	0.006		
10		23.84	0.009		
0		31.15	0.012		
-10		11.55	0.005		
-20		22.82	0.009		
-30		30.82	0.012		
25	Maximum Voltage	30.92	0.012		
25	BEP	34.91	0.014		

LTE Band 41 (QPSK) / 2593MHz / BW20M					
Temperature (°C)	Voltage	Freq. Dev.	Freq. Dev.	Limit	Result
	(Volt)	(Hz)	(ppm)		
50	Normal Voltage	23.20	0.009	2.5ppm	PASS
40		26.33	0.010		
30		32.45	0.013		
20		23.16	0.009		
10		12.17	0.005		
0		28.32	0.011		
-10		27.76	0.011		
-20		23.69	0.009		
-30		21.85	0.009		
25	Maximum Voltage	28.00	0.011		
25	BEP	33.66	0.013		

LTE Band 66 (QPSK) / 1745MHz / BW10M					
Temperature (°C)	Voltage	Freq. Dev.	Freq. Dev.	Limit	Result
	(Volt)	(Hz)	(ppm)		
50	Normal Voltage	11.79	0.007	2.5ppm	PASS
40		35.89	0.021		
30		24.64	0.014		
20		26.15	0.015		
10		32.22	0.019		
0		28.14	0.016		
-10		26.95	0.016		
-20		11.72	0.007		
-30		33.32	0.019		
25	Maximum Voltage	23.61	0.014		
25	BEP	20.14	0.012		

LTE Band 66 (QPSK) / 1745MHz / BW20M					
Temperature (°C)	Voltage	Freq. Dev.	Freq. Dev.	Limit	Result
	(Volt)	(Hz)	(ppm)		
50	Normal Voltage	15.53	0.009	2.5ppm	PASS
40		18.87	0.011		
30		31.97	0.018		
20		31.53	0.018		
10		14.14	0.008		
0		33.23	0.019		
-10		12.37	0.007		
-20		31.61	0.018		
-30		27.36	0.016		
25	Maximum Voltage	27.07	0.016		
25	BEP	15.36	0.009		

APPENDIX-PHOTOS OF TEST SETUP

Note: See test photos in setup photo document for the actual connections between Product and support equipment.

※※※※※END OF THE REPORT※※※※※