TEST REPORT

Applicant	:	INDUSTRIAS MAN DE MEXICO S.A. DE C.V.
Address	:	AV. 5 EJE 3 ORIENTE NO.103, COL. GRANJAS SAN ANTONIO, C.P. 09070, IZTAPALAPA, CDMX, MEXICO
Manufacturer	:	INDUSTRIAS MAN DE MEXICO S.A. DE C.V.
Address	:	AV. 5 EJE 3 ORIENTE NO.103, COL. GRANJAS SAN ANTONIO, C.P. 09070, IZTAPALAPA, CDMX, MEXICO
Product Name	:	PEDESTAL FAN
Model Number	:	SMART MIBLU 0018
Trademark	:	mAn
FCC ID	:	2BUJD-SMARTMIBLU
Test Date	:	Jan. 06, 2026 – Jan. 18, 2026
Date of Report	:	Jan. 19, 2026
Test Result	:	This device described above has been tested by BKC, and the test results show that the equipment under test (EUT) is in compliance with the Standard requirements. And it is applicable only to the tested sample identified in the report.

Test Procedure Used:

Standards	:	FCC CFR Title 47 Part 15 Subpart C Section 15.247 ANSI C63.10:2020 RSS-247 Issue 3 August 2023 RSS-Gen Issue 5, Amendment 2 (February 2021)

Prepared by(Test Engineer):
Carey Zheng

Reviewer(Supervisor):
Casey Wang

Approved(Manager):
Jerry Liao

SHENZHEN BKC TESTING CO., LTD. BKC APPROVED

TABLE OF CONTENT

1. General Information 5
1.1. Description of Device (EUT) 5
1.2. Channel List 5
1.3. Summary of test result 6
1.4. Special Accessories and Auxiliary Equipment 6
1.5. Test mode 6
1.6. Block Diagram 7
1.7. Test Conditions 7
1.8. Measurement Uncertainty (95% confidence levels, k=2) 7
1.9. Test Facility 8
1.10. Test Equipment 8
2. Conducted emission at the mains terminals test 10
2.1. Limit 10
2.2. Test Setup 10
2.3. Test Procedure 10
2.4. Test Result 11
3. Radiated Spurious Emissions 13
3.1. Limit 13
3.2. Test Setup 14
3.3. Test Procedure 15
3.4. Test Result 16
4. Conducted Spurious Emissions 21
4.1. Limit 21
4.2. Test Setup 21
4.3. Test Procedure 21
4.4. Test Result 22
5. Band Edge Measurement 23
5.1. Limit 23
5.2. Test setup 23
5.3. Test Procedure 23
5.4. Test Result 23
6. -6 dB Bandwidth and 99% Bandwidth Measurement 24
6.1. Limit 24
6.2. Test Setup 24
6.3. Test Procedure 24
6.4. Test Result 24
7. Maximum Peak Output Power 25
7.1. Limit 25
7.2. Test Setup 25
7.3. Test Procedure 25
7.4. Test Result 25
8. Power Spectral density 26
8.1. Limit 26
8.2. Test Setup 26
8.3. Test Procedure 26
8.4. Test Result 26
9. Antenna Requirement 27
Result 27
10. Test Photographs 28

11. Appendix I: Photos of the EUT 28

Revision History of This Test Report		
Report Number	Description	Issued Date
BKC26010224AE-1	Initial Issue	2026-01-19

1. General Information

1.1.Description of Device (EUT)

EUT Name	:	PEDESTAL FAN
Model No.	:	SMART MIBLU 0018
Model Difference	:	N/A
Power supply	:	AC 120V 60Hz
Operation frequency	:	2402-2480MHz
Max. RF output power	:	-0.11dBm
Modulation	:	GFSK
Rate	:	1M
Antenna Type	:	PCB antenna, Maximum Gain is 1.2dBi
Intend use environment	:	Residential, commercial and light industrial environment

1.2.Channel List

Channel	Frequency (MHz)	Channel	Frequency (MHz)	Channel	Frequency (MHz)
00	**2402**	14	2430	28	2458
01	2404	15	2432	29	2460
02	2406	16	2434	30	2462
03	2408	17	2436	31	2464
04	2410	18	2438	32	2466
05	2412	**19**	**2440**	33	2468
06	2414	20	2442	34	2470
07	2416	21	2444	35	2472
08	2418	22	2446	36	2474
09	2420	23	2448	37	2476
10	2422	24	2450	38	2478
11	2424	25	2452	39	**2480**
12	2426	26	2454		
13	2428	27	2456		

1.3.Summary of test result

RF PART		
Test Items	**Test Requirement**	**Result**
Antenna requirement	FCC part 15.203/15.247 (b)(4) RSS-Gen Section 6.8	PASS
AC Power Line Conducted Emission	FCC part 15.207 RSS-Gen 8.8	PASS
Conducted Peak Output Power	FCC part 15.247 (b)(3) RSS-247 5.4(d)	PASS
Channel Bandwidth& 99% OCB	FCC part 15.247 (a)(2) RSS-247 5.2(a)	PASS
Power Spectral Density	FCC part 15.247 (e) RSS-247 5.2(b)	PASS
Band Edge	FCC part 15.247(d) RSS-Gen 8.9 RSS-247 5.5	PASS
Spurious Emission	FCC part 15.205/15.209 RSS-247 5.5 RSS-Gen 8.9	PASS
Remark: N/A is an abbreviation for Not Applicable. Measurement Uncertainty is not taken into account for conformity statement		

1.4.Special Accessories and Auxiliary Equipment

Description	Manufacturer	Model No.	Hardware Version	Software Version
/	/	/	/	/

Test Software	Power level setup
FCC-TEST-V1.08	0 dBm

1.5.Test mode

The special RF test software was used to control EUT work in Continuous RF 2.4G TX mode, and select test channel, wireless mode.

Test mode	Low channel	Middle channel	High channel
GFSK	2402MHz	2440MHz	2482MHz
Note：Only the worst Data Record in the report			

1.6.Block Diagram

Conducted Emission

AC Line — EUT

Radiated Emission

AC Line — EUT

Conducted Spurious

EUT

1.7.Test Conditions

Category	Normal Conditions	Extreme Conditions
Temperature range	15-35℃	N/A
Humidity range	20-75%	N/A
Pressure range	86-106kPa	N/A
Power supply	AC 120V 60Hz	N/A
Note: N/A is an abbreviation for Not Applicable.		

1.8.Measurement Uncertainty (95% confidence levels, k=2)

Item	MU	Remark
Uncertainty for radio frequency	±7×10-8	
Conducted Emissions (150kHz~30MHz)	±2.54dB	
Radiated Emission(9KHz~30MHz)	±1.6 dB	
Radiated Emission(30MHz~1GHz)	Vertical:±4.14dB Horizontal:±4.25dB	
Radiated Emission(1GHz~6GHz)	±3.9dB	
Radiated Emission(6GHz~18GHz)	±4.3dB	
Radiated Emission(18GHz~40GHz)	±3.38dB	
Uncertainty for conducted RF Power	±0.20dB	
Conducted spurious emissions	±0.24dB	
Uncertainty for temperature	0.6℃	
Uncertainty for humidity	1%	
Bandwidth	± 1.5 x 10-6	
Time	±2%	
Duty Cycle	±2%	
Remark: The coverage Factor (k=2), and measurement Uncertainty for a level of Confidence of 95%		

1.9.Test Facility

Site Description		
Name of Firm	:	Shenzhen BKC Testing Co., Ltd.
Site Location	:	Room 103, 1/F, Huaya Building, Huaya Industrial Park, Longhua Community, Longhua District, Shenzhen, Guangdong, China.
ISED CAB identifier	:	CN0188
ISED Company Number	:	34333
FCC Designation Number	:	CN1416
FCC Test Firm Registration Number	:	701543

1.10.Test Equipment

Conducted Test Site

Item	Kind of Equipment	Manufacturer	Type No.	Serial No.	Last calibration	Calibrated until
1	LISN	R&S	ENV216	102762	Mar. 10. 2025	Mar. 09. 2026
2	EMI Test Receiver	R&S	ESCI	101424	Mar. 10. 2025	Mar. 09. 2026
3	Rf cables	HTEC	HCE 2M-CE	N/A	Mar. 10. 2025	Mar. 09. 2026
4	Coupling/ Decoupling Network	Diamond	CX210	N/A	Mar. 10. 2025	Mar. 09. 2026
5	CE Testing software	EZ	EZ-EMC	/	/	/

Radiated Test Site (Below 1G and Above 1G)

Item	Kind of Equipment	Manufacturer	Type No.	Serial No.	Last calibration	Calibrated until
1	Antenna	Schwarzbeck	VULB 9168	01321	Mar. 20. 2025	Mar. 19. 2028
2	EMI Test Receiver	R&S	ESRP	101478	Mar. 10. 2025	Mar. 09. 2026
3	Preamplifier	HP	8447D	2727A05345	Mar. 10. 2025	Mar. 09. 2026
4	Double Ridged Broadband	SCHWARZBECK	BBHA 9120D	02621	Mar. 10. 2025	Mar. 19. 2028
5	Preamplifier	Schwarzbeck	BBV 9718D	00041	Mar. 10. 2025	Mar. 09. 2026
6	Rf cables	HUBER+SUHNER	8M-RE	N/A	Mar. 10. 2025	Mar. 09. 2026
7	Rf cables	HUBER+SUHNER	1.5M-RE	N/A	Mar. 10. 2025	Mar. 09. 2026
8	Rf cables	HUBER+SUHNER	1.5M-AP-RE	N/A	Mar. 10. 2025	Mar. 09. 2026
9	Loop antenna	TESEQ	HLA6121	58357	Mar. 09. 2025	Mar. 10. 2026
10	Spectrum analyzer	R&S	FSP40	200061	Feb. 13. 2025	Feb. 12. 2026
11	Double Ridged Broadband Horn Antenna	COM-POWER	AH-1840	10100009	Mar. 10. 2025	Mar. 09. 2026

12	Spectrum	Agilent	N9020A	MY50510311	Mar. 09. 2025	Mar. 10. 2026
13	RE Testing software	EZ	EZ-EMC	/		/

RF Test Site

Item	Kind of Equipment	Manufacturer	Type No.	Serial No.	Last calibration	Calibrated until
1	Spectrum	Agilent	N9020A	MY50510311	Mar. 09. 2025	Mar. 10. 2026
2	Vector source	Agilent	N5182A	MY47420223	Mar. 09. 2025	Mar. 10. 2026
3	All instrument	Rohde & Schwarz	CMW 500	101131	Mar. 09. 2025	Mar. 10. 2026
4	control unit	MW	MW100-RFCB	MW200411BK-34	Mar. 09. 2025	Mar. 10. 2026
5	RF Testing software	MW	MTS 8310	/	Mar. 09. 2025	/
6	Spectrum analyzer	R&S	FSP40	200061	Feb. 13. 2025	Feb. 12. 2026

Test software

Software name	RF Testing software
Software version	2.0.0.0
Software name	RE Testing software
Software version	EMEC-03A2 RE+
Software name	CE Testing software
Software version	EMEC-3A1+

2. Conducted emission at the mains terminals test

2.1.Limit

Test Requirement:	FCC Part15 C Section 15.207, RSS-Gen 8.8
Test Method:	ANSI C63.10:2020
Test Frequency Range:	150KHz to 30MHz
Receiver setup:	RBW=9KHz, VBW=30KHz, Sweep time=auto

Frequency MHz	Limits dB(μV)	
	Quasi-peak Level	Average Level
0.15 ~ 0.50	66 ~ 56*	56 ~ 46*
0.50 ~ 5.00	56	46
5.00 ~ 30.00	60	50

Notes: 1. *Decreasing linearly with logarithm of frequency.
2. The lower limit shall apply at the transition frequencies.

2.2.Test Setup

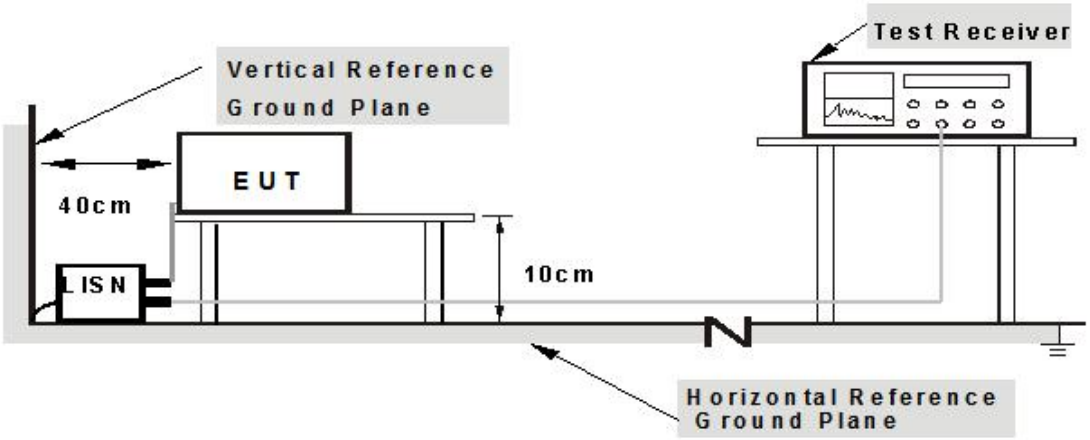

Note: 1.Support units were connected to second LISN.
2.Both of LISNs (AMN) are 10 cm from EUT and at least 10 from other units and other metal planes

2.3.Test Procedure

1. The EUT was placed 0.1 meters from the horizontal ground plane with EUT being connected to the power mains through a line impedance stabilization network (LISN). All other support equipments powered from additional LISN(s). The LISN provide 50 Ohm/ 50uH of coupling impedance for the measuring instrument.
2. Interconnecting cables that hang closer than 40 cm to the ground plane shall be folded back and forth in the center forming a bundle 30 to 40 cm long.
3. I/O cables that are not connected to a peripheral shall be bundled in the center. The end of the cable may be terminated, if required, using the correct terminating impedance. The overall length shall not exceed 1 m.
4. LISN at least 80 cm from nearest part of EUT chassis.
5.For the actual test configuration, please refer to the related Item – EUT Test Photos.

2.4.Test Result

Conducted Emission at The Mains Terminals Test Data			
Temperature:	25.1℃	Relative Humidity:	56%
Pressure:	1008hPa	Phase:	L
Test Voltage:	AC 120V/60Hz	Test Mode:	GFSK(CH00)

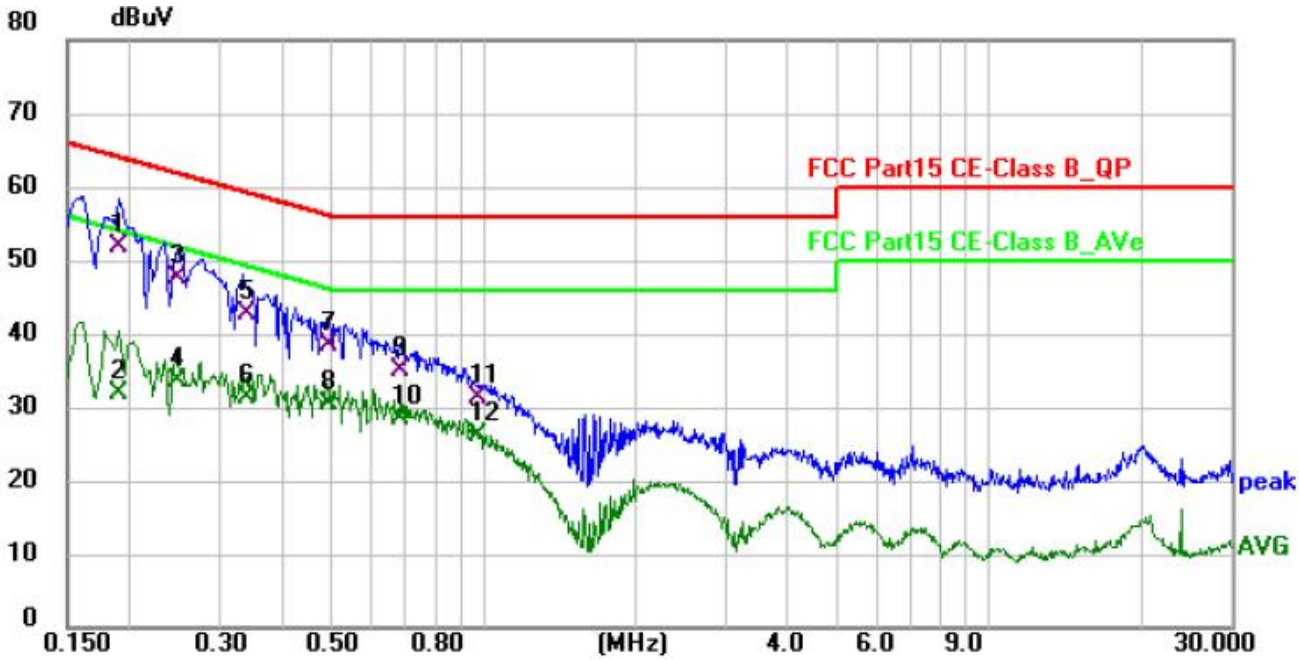

No.	Frequency (MHz)	Reading (dBuV)	Factor (dB)	Level (dBuV)	Limit (dBuV)	Margin (dB)	Detector
1 *	0.1888	32.36	19.54	51.90	64.09	-12.19	QP
2	0.1888	12.18	19.54	31.72	54.09	-22.37	AVG
3	0.2469	28.03	19.57	47.60	61.86	-14.26	QP
4	0.2469	14.14	19.57	33.71	51.86	-18.15	AVG
5	0.3376	23.26	19.45	42.71	59.26	-16.55	QP
6	0.3376	11.82	19.45	31.27	49.26	-17.99	AVG
7	0.4952	19.03	19.47	38.50	56.08	-17.58	QP
8	0.4952	10.90	19.47	30.37	46.08	-15.71	AVG
9	0.6849	15.52	19.44	34.96	56.00	-21.04	QP
10	0.6849	8.99	19.44	28.43	46.00	-17.57	AVG
11	0.9654	11.82	19.52	31.34	56.00	-24.66	QP
12	0.9654	6.68	19.52	26.20	46.00	-19.80	AVG

Notes: 1. An initial pre-scan was performed on the line and neutral lines with peak detector.
2. Quasi-Peak and Average measurement were performed at the frequencies with maximized peak emission.
3. Mesurement Level = Reading level + Correct Factor

Conducted Emission at The Mains Terminals Test Data			
Temperature:	25.1℃	Relative Humidity:	56%
Pressure:	1008hPa	Phase:	N
Test Voltage:	AC 120V/60Hz	Test Mode:	GFSK(CH00)

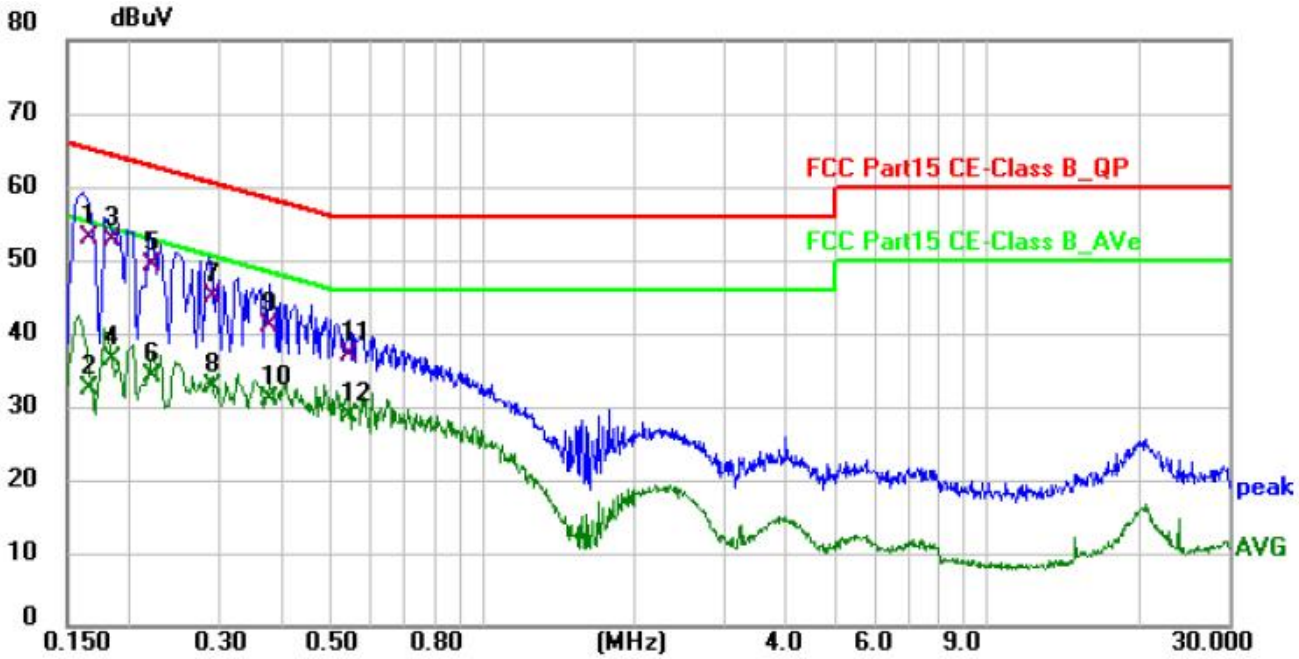

No.	Frequency (MHz)	Reading (dBuV)	Factor (dB)	Level (dBuV)	Limit (dBuV)	Margin (dB)	Detector
1	0.1658	33.61	19.53	53.14	65.17	-12.03	QP
2	0.1658	12.97	19.53	32.50	55.17	-22.67	AVG
3 *	0.1826	33.32	19.53	52.85	64.37	-11.52	QP
4	0.1826	16.76	19.53	36.29	54.37	-18.08	AVG
5	0.2209	29.76	19.51	49.27	62.79	-13.52	QP
6	0.2209	14.53	19.51	34.04	52.79	-18.75	AVG
7	0.2898	25.32	19.54	44.86	60.53	-15.67	QP
8	0.2898	13.25	19.54	32.79	50.53	-17.74	AVG
9	0.3768	21.50	19.48	40.98	58.35	-17.37	QP
10	0.3768	11.62	19.48	31.10	48.35	-17.25	AVG
11	0.5438	17.43	19.47	36.90	56.00	-19.10	QP
12	0.5438	9.28	19.47	28.75	46.00	-17.25	AVG

Notes: 1. An initial pre-scan was performed on the line and neutral lines with peak detector.
2. Quasi-Peak and Average measurement were performed at the frequencies with maximized peak emission.
3. Mesurement Level = Reading level + Correct Factor

3. Radiated Spurious Emissions

3.1.Limit

Test Requirement: FCC CFR47 Part 15 Section 15.209 & 15.247,RSS-247 5.5&RSS-Gen 8.9

Test Method: KDB 558074 D01 15.247 Meas Guidance v05 August 24, 2018; ANSI C63.10:2020

Test Result: PASS

Measurement Distance: 3m

Frequency	Detector	RBW	VBW	Value
9KHz-150KHz	Quasi-peak	200Hz	600Hz	Quasi-peak
150KHz-30MHz	Quasi-peak	9KHz	30KHz	Quasi-peak
30MHz-1GHz	Quasi-peak	100KHz	300KHz	Quasi-peak
Above 1GHz	Peak	1MHz	3MHz	Peak
	Peak	1MHz	10Hz	Average

Limit:

Frequency (MHz)	Field Strength		Field Strength Limit at 3m Measurement Dist	
	uV/m	Distance (m)	uV/m	dBuV/m
0.009 ~ 0.490	2400/F(kHz)	300	10000 * 2400/F(kHz)	20log(2400/F(kHz)) + 80
0.490 ~ 1.705	24000/F(kHz)	30	100 * 24000/F(kHz)	20log(24000/F(kHz)) + 40
1.705 ~ 30	30	30	100 * 30	20log(30) + 40
30 ~ 88	100	3	100	20log(100)
88 ~ 216	150	3	150	20log(150)
216 ~ 960	200	3	200	20log(200)
Above 960	500	3	500	20log(500)

3.2.Test Setup

The radiated emission tests were performed in the 3m Semi- Anechoic Chamber test site, using the setup accordance with the ANSI C63.10.

The test setup for emission measurement below 30MHz.

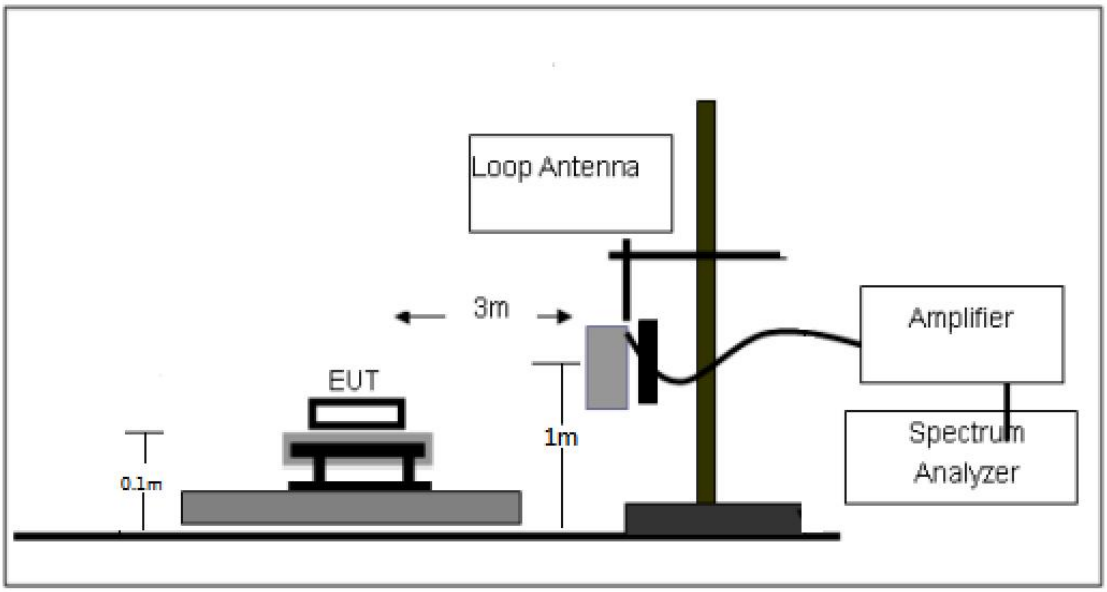

The test setup for emission measurement from 30 MHz to 1 GHz.

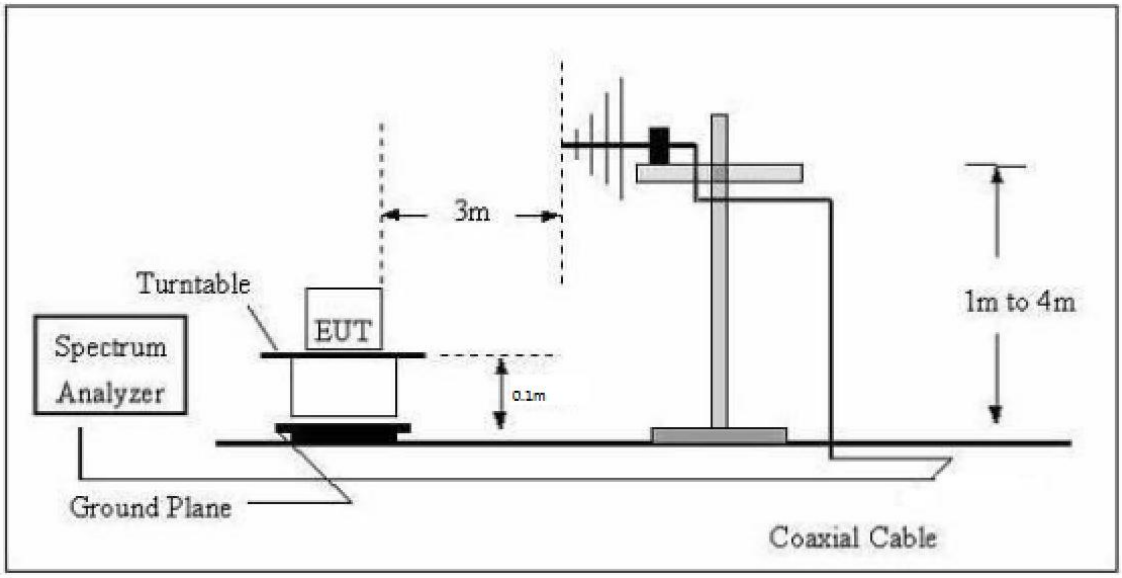

The test setup for emission measurement above 1 GHz.

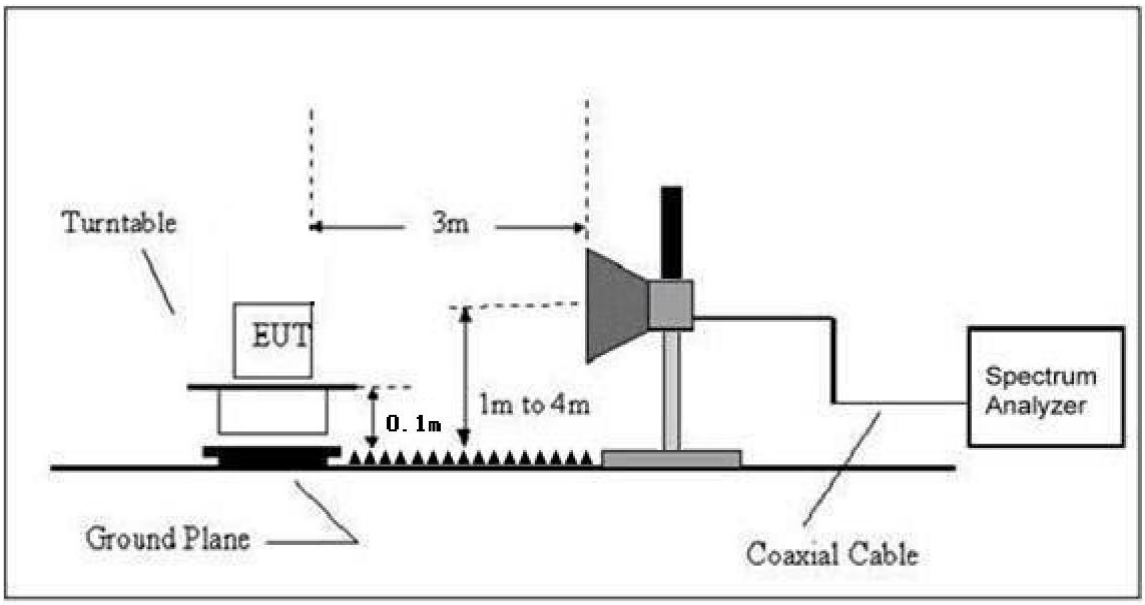

3.3.Test Procedure

1. The EUT is placed on a turntable, which is 0.8m above ground plane for below 1GHz and 1.5m for above 1GHz.

2. The turntable shall be rotated for 360 degrees to determine the position of maximum emission level.

3. EUT is set 3m away from the receiving antenna, which is moved from 1m to 4m to find out the maximum emissions.

4. Maximum procedure was performed on the six highest emissions to ensure EUT compliance.

5. And also, each emission was to be maximized by changing the polarization of receiving antenna both horizontal and vertical.

6. Repeat above procedures until the measurements for all frequencies are complete.

7. The radiation measurements are performed in X, Y and Z axis positioning(X denotes lying on the table, Y denotes side stand and Z denotes vertical stand),the worst condition was tested putting the eut in Z axis,so the worst data were shown as follow.

8. A 2.4GHz high - pass filter is used druing radiated emissions above 1GHz measurement.

3.4.Test Result

Test Frequency: 9KHz~30MHz

The measurements were more than 20 dB below the limit and not reported.

Test Frequency : 30MHz ~ 1GHz

Radiation Emission Test Data			
Temperature:	25.1℃	Relative Humidity:	56%
Pressure:	1008hPa	Phase:	Horizontal
Test Voltage:	AC 120V/60Hz	Test Mode:	GFSK(CH00)

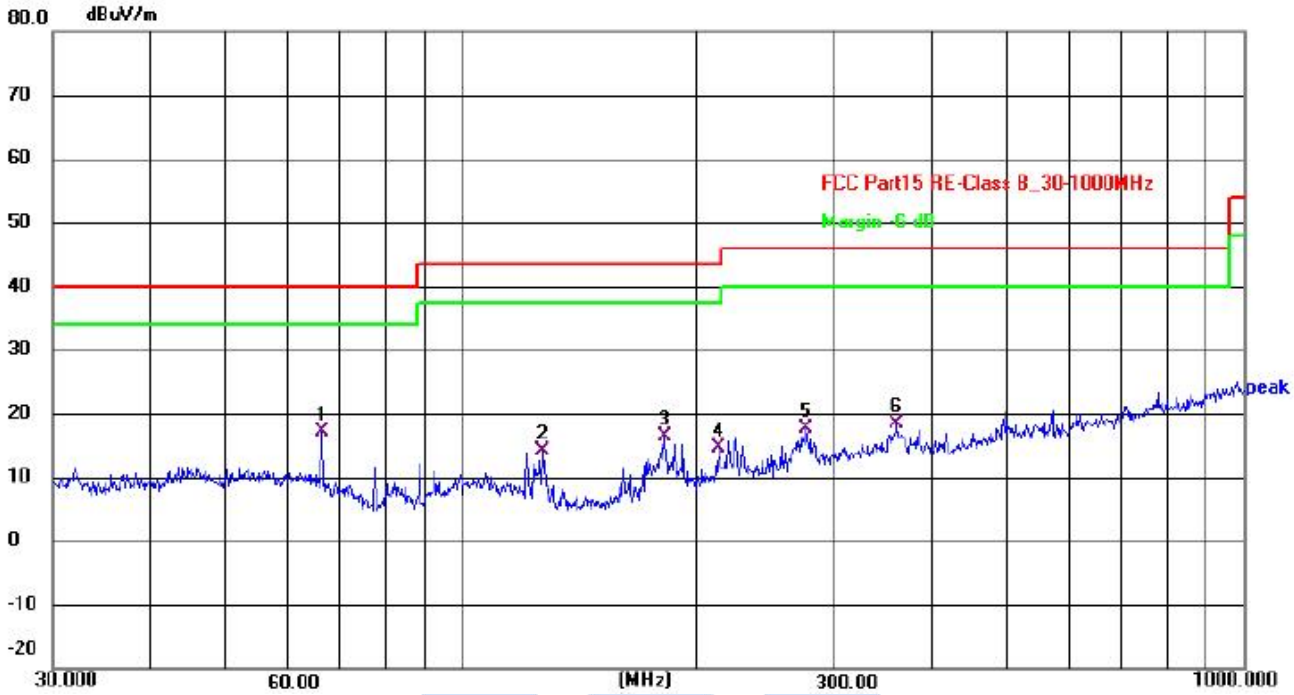

No.	Frequency (MHz)	Reading (dBuV)	Factor (dB/m)	Level (dBuV/m)	Limit (dBuV/m)	Margin (dB)	Detector
1	66.2661	34.19	-16.95	17.24	40.00	-22.76	QP
2	126.7723	32.53	-18.43	14.10	43.50	-29.40	QP
3	181.9202	33.83	-17.35	16.48	43.50	-27.02	QP
4	213.0151	30.49	-15.90	14.59	43.50	-28.91	QP
5	276.1235	31.70	-14.10	17.60	46.00	-28.40	QP
6	360.4476	30.65	-12.37	18.28	46.00	-27.72	QP

Note:
1. Factor = Antenna Factor + Cable Loss – Pre-amplifier.
Emission Level = Reading + Factor
Margin=Emission Level-Limit
2. All the modes have tested and recorded the worst mode(GFSK) in the report

Radiation Emission Test Data			
Temperature:	25.1℃	Relative Humidity:	56%
Pressure:	1008hPa	Phase:	Vertical
Test Voltage:	AC 120V/60Hz	Test Mode:	GFSK(CH00)

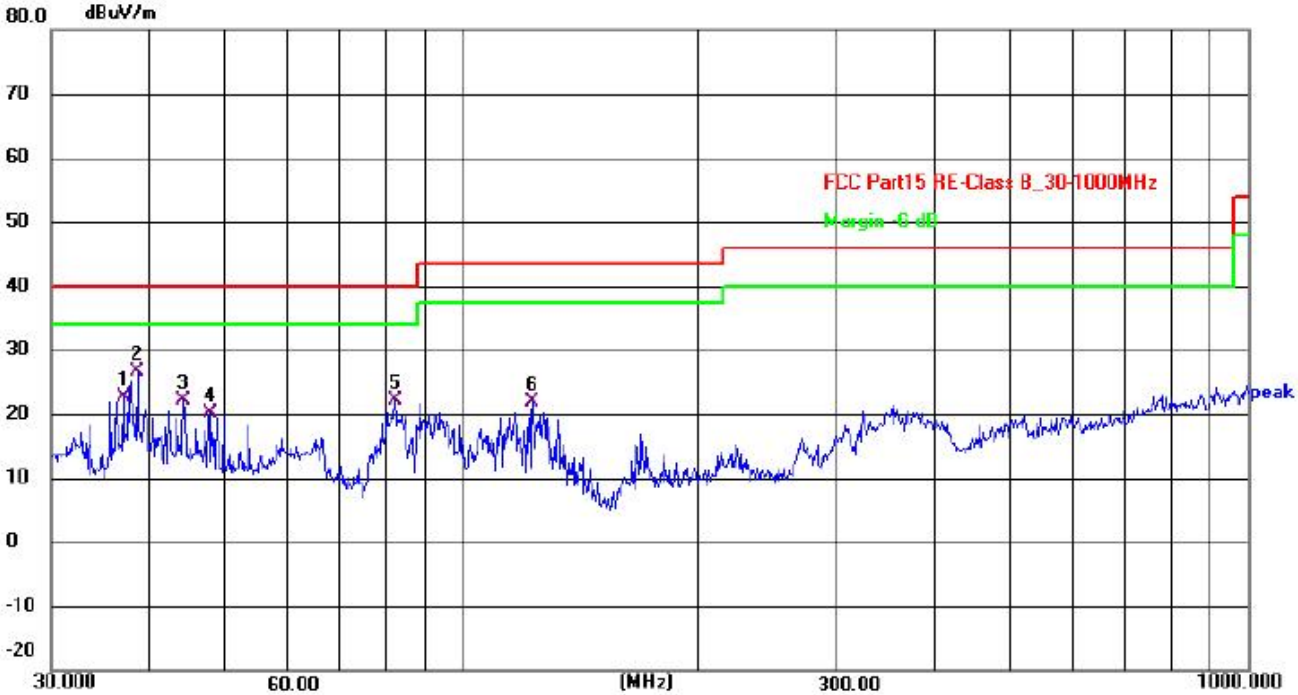

No.	Frequency (MHz)	Reading (dBuV)	Factor (dB/m)	Level (dBuV/m)	Limit (dBuV/m)	Margin (dB)	Detector
1	37.0250	38.37	-15.78	22.59	40.00	-17.41	QP
2	38.6160	42.12	-15.38	26.74	40.00	-13.26	QP
3	44.1202	36.69	-14.45	22.24	40.00	-17.76	QP
4	47.6584	34.37	-14.26	20.11	40.00	-19.89	QP
5	82.0705	41.93	-19.70	22.23	40.00	-17.77	QP
6	122.8340	39.64	-17.81	21.83	43.50	-21.67	QP

Note:
1. Factor = Antenna Factor + Cable Loss – Pre-amplifier.
Emission Level = Reading + Factor
Margin=Emission Level-Limit
2. All the modes have tested and recorded the worst mode(GFSK) in the report

1GHz~25GHz

Polar (H/V)	Frequency (MHz)	Meter Reading (dBuV)	Pre-amplifier (dB)	Cable Loss (dB)	Antenna Factor (dB)	Emission Level (dBuV/m)	Limits (dBuV/m)	Margin (dB)	Detector Type
Low Channel:2402MHz									
V	4804.00	50.09	34.12	5.03	32.39	53.39	74.00	-20.61	Pk
V	4804.00	40.02	34.12	5.03	32.39	43.32	54.00	-10.68	AV
V	7206.00	46.57	32.54	6.29	35.86	56.18	74.00	-17.82	Pk
V	7206.00	34.24	32.54	6.29	35.86	43.85	54.00	-10.15	AV
V	9608.00	47.01	32.98	7.55	38.40	59.98	74.00	-14.02	Pk
V	9608.00	32.07	32.98	7.55	38.40	45.04	54.00	-8.96	AV
V	12010.00	43.36	32.09	8.93	39.00	59.20	74.00	-14.80	Pk
V	12010.00	27.06	32.09	8.93	39.00	42.90	54.00	-11.10	AV
H	4804.00	48.40	34.12	5.03	32.39	51.70	74.00	-22.30	Pk
H	4804.00	37.32	34.12	5.03	32.39	40.62	54.00	-13.38	AV
H	7206.00	47.88	32.54	6.29	35.86	57.49	74.00	-16.51	Pk
H	7206.00	31.13	32.54	6.29	35.86	40.74	54.00	-13.26	AV
H	9608.00	47.28	32.98	7.55	38.40	60.25	74.00	-13.75	Pk
H	9608.00	27.84	32.98	7.55	38.40	40.81	54.00	-13.19	AV
H	12010.00	38.36	32.09	8.93	39.00	54.20	74.00	-19.80	Pk
H	12010.00	26.25	32.09	8.93	39.00	42.09	54.00	-11.91	AV

Polar (H/V)	Frequency (MHz)	Meter Reading (dBuV)	Pre-amplifier (dB)	Cable Loss (dB)	Antenna Factor (dB)	Emission Level (dBuV/m)	Limits (dBuV/m)	Margin (dB)	Detector Type
Middle Channel:2440MHz									
V	4880.00	50.00	34.07	5.09	32.59	53.61	74.00	-20.39	Pk
V	4880.00	40.15	34.07	5.09	32.59	43.76	54.00	-10.24	AV
V	7320.00	44.72	32.63	6.34	35.96	54.39	74.00	-19.61	Pk
V	7320.00	35.88	32.63	6.34	35.96	45.55	54.00	-8.45	AV
V	9760.00	41.37	32.92	7.59	38.40	54.44	74.00	-19.56	Pk
V	9760.00	28.77	32.92	7.59	38.40	41.84	54.00	-12.16	AV
V	12200.00	39.37	31.96	8.88	39.04	55.33	74.00	-18.67	Pk
V	12200.00	28.65	31.96	8.88	39.04	44.61	54.00	-9.39	AV
H	4880.00	49.73	34.07	5.09	32.59	53.34	74.00	-20.66	Pk
H	4880.00	39.44	34.07	5.09	32.59	43.05	54.00	-10.95	AV
H	7320.00	45.38	32.63	6.34	35.96	55.05	74.00	-18.95	Pk
H	7320.00	33.46	32.63	6.34	35.96	43.13	54.00	-10.87	AV
H	9760.00	39.16	32.92	7.59	38.40	52.23	74.00	-21.77	Pk
H	9760.00	29.06	32.92	7.59	38.40	42.13	54.00	-11.87	AV
H	12200.00	39.96	31.96	8.88	39.04	55.92	74.00	-18.08	Pk
H	12200.00	29.37	31.96	8.88	39.04	45.33	54.00	-8.67	AV

Polar (H/V)	Frequency (MHz)	Meter Reading (dBuV)	Pre-amplifier (dB)	Cable Loss (dB)	Antenna Factor (dB)	Emission Level (dBuV/m)	Limits (dBuV/m)	Margin (dB)	Detector Type
High Channel:2480MHz									
V	4960.00	47.32	34.02	5.15	32.80	51.25	74.00	-22.75	Pk
V	4960.00	36.33	34.02	5.15	32.80	40.26	54.00	-13.74	AV
V	7440.00	45.10	32.71	6.40	36.05	54.84	74.00	-19.16	Pk
V	7440.00	35.30	32.71	6.40	36.05	45.04	54.00	-8.96	AV
V	9920.00	38.83	32.86	7.62	38.40	51.99	74.00	-22.01	Pk
V	9920.00	27.41	32.86	7.62	38.40	40.57	54.00	-13.43	AV
V	12400.00	38.09	31.82	8.84	39.08	54.19	74.00	-19.81	Pk
V	12400.00	26.57	31.82	8.84	39.08	42.67	54.00	-11.33	AV
H	4960.00	47.02	34.02	5.15	32.80	50.95	74.00	-23.05	Pk
H	4960.00	37.70	34.02	5.15	32.80	41.63	54.00	-12.37	AV
H	7440.00	45.35	32.71	6.40	36.05	55.09	74.00	-18.91	Pk
H	7440.00	30.42	32.71	6.40	36.05	40.16	54.00	-13.84	AV
H	9920.00	38.02	32.86	7.62	38.40	51.18	74.00	-22.82	Pk
H	9920.00	28.44	32.86	7.62	38.40	41.60	54.00	-12.40	AV
H	12400.00	37.21	31.82	8.84	39.08	53.31	74.00	-20.69	Pk
H	12400.00	27.39	31.82	8.84	39.08	43.49	54.00	-10.51	AV

Note: 1. Emission Level = Meter Reading + Antenna Factor + Cable Loss – Pre-amplifier,
Margin= Emission Level - Limit
2. If peak below the average limit, the average emission was no test.
3. The amplitude of spurious emissions which are attenuated by more than 20dB below the permissible value has no need to be reported.

Spurious Emission in Restricted Band 2310-2390MHz and 2483.5-2500MHz

	Polar (H/V)	Frequency (MHz)	Meter Reading (dBuV)	Pre-amplifier (dB)	Cable Loss (dB)	Antenna Factor (dB/m)	Emission level (dBuV/m)	Limit (dBuV/m)	Margin (dB)	Detector Type	Result
GFSK	Low Channel: 2402MHz										
	H	2310.00	53.81	30.22	3.85	27.98	55.42	74.00	-18.58	PK	PASS
	H	2310.00	41.50	30.22	3.85	27.98	43.11	54.00	-10.89	AV	PASS
	H	2390.00	57.80	35.17	3.48	27.49	53.60	74.00	-20.4	PK	PASS
	H	2390.00	49.68	35.17	3.48	27.49	45.48	54.00	-8.52	AV	PASS
	H	2400.00	58.94	35.16	3.49	27.52	54.79	74.00	-19.21	PK	PASS
	H	2400.00	49.90	35.16	3.49	27.52	45.75	54.00	-8.25	AV	PASS
	V	2310.00	52.85	30.22	3.85	27.98	54.46	74.00	-19.54	PK	PASS
	V	2310.00	43.15	30.22	3.85	27.98	44.76	54.00	-9.24	AV	PASS
	V	2390.00	56.94	35.17	3.48	27.49	52.74	74.00	-21.26	PK	PASS
	V	2390.00	48.67	35.17	3.48	27.49	44.47	54.00	-9.53	AV	PASS
	V	2400.00	58.71	35.16	3.49	27.52	54.56	74.00	-19.44	PK	PASS
	V	2400.00	48.93	35.16	3.49	27.52	44.78	54.00	-9.22	AV	PASS
	High Channel: 2480MHz										
	H	2483.50	57.25	35.11	3.56	27.75	53.45	74.00	-20.55	PK	PASS
	H	2483.50	48.49	35.11	3.56	27.75	44.69	54.00	-9.31	AV	PASS
	H	2500.00	59.00	35.10	3.57	27.80	55.27	74.00	-18.73	PK	PASS
	H	2500.00	48.92	35.10	3.57	27.80	45.19	54.00	-8.81	AV	PASS
	V	2483.50	57.75	35.11	3.56	27.75	53.95	74.00	-20.05	PK	PASS
	V	2483.50	50.22	35.11	3.56	27.75	46.42	54.00	-7.58	AV	PASS
	V	2500.00	58.31	35.10	3.57	27.80	54.58	74.00	-19.42	PK	PASS
	V	2500.00	48.84	35.10	3.57	27.80	45.11	54.00	-8.89	AV	PASS
	Remark: 1. Emission Level = Meter Reading + Antenna Factor + Cable Loss – Pre-amplifier, Margin= Emission Level - Limit										

4. Conducted Spurious Emissions

4.1.Limit

Test Requirement: FCC CFR47 Part 15 Section 15.247,RSS-247 5.5
Test Method: KDB 558074 D01 15.247 Meas Guidance v05 August 24, 2018; ANSI C63.10:2020
Test Result: PASS

Limit:
In any 100 kHz bandwidth outside the frequency band in which the spread spectrum or digitally modulated intentional radiator is operating, the radio frequency power that is produced by the intentional radiator shall be at least 20 dB below that in the 100 kHz bandwidth within the band that contains the highest level of the desired power, based on either an RF conducted or a radiated measurement, provided the transmitter demonstrates compliance with the peak conducted power limits. If the transmitter complies with the conducted power limits based on the use of RMS averaging over a time interval, as permitted under paragraph (b)(3) of this section, the attenuation required under this paragraph shall be 30 dB instead of 20 dB. Attenuation below the general limits specified in Section 15.209(a) is not required. In addition, radiated emissions which fall in the restricted bands, as defined in Section 15.205(a), must also comply with the radiated emission limits specified in Section 15.209(a) (see Section 15.205(c)).

4.2.Test Setup

4.3.Test Procedure

Reference level measurement
Establish a reference level by using the following procedure:
a) Set instrument center frequency to DTS channel center frequency.
b) Set the span to ≥ 1.5 times the DTS bandwidth.
c) Set the RBW = 100 kHz.
d) Set the VBW ≥ [3 × RBW].
e) Detector = peak.
f) Sweep time = No faster than coupled (auto) time.
g) Trace mode = max-hold.
h) Allow trace to fully stabilize.
i) Use the peak marker function to determine the maximum PSD level.
Note that the channel found to contain the maximum PSD level can be used to establish the reference level
Emission level measurement
Establish an emission level by using the following procedure:
a) Set the center frequency and span to encompass frequency range to be measured. Note that the frequency range might need to be divided into multiple frequency ranges to retain frequency resolution.
NOTE—the number of points can also be increased for large spans to retain frequency resolution
b) Set the RBW = 100 kHz.
c) Set the VBW ≥ [3 × RBW].
d) Detector = peak.
e) Sweep time = No faster than coupled (auto) time.
f) Trace mode = max-hold.
g) Allow trace to fully stabilize.
h) Use the peak marker function to determine the maximum amplitude level.
Ensure that the amplitude of all unwanted emissions outside of the authorized frequency band (excluding restricted frequency bands) is attenuated by at least the minimum requirements specified in 11.11. Report the three highest emissions relative to the limit.

4.4.Test Result

Please see the attachment for data.

5. Band Edge Measurement

5.1.Limit

Test Requirement: FCC CFR47 Part 15 Section 15.247,RSS-Gen 8.9&RSS-247 5.5
Test Method: KDB 558074 D01 15.247 Meas Guidance v05 August 24, 2018;
ANSI C63.10:2020
Test Limit: Regulation 15.247 (d),In any 100 kHz bandwidth outside the frequency band which the spread spectrum or digitally modulated intentional radiator is operating, the radio frequency power that is produced by the intentional radiator shall be at least 20 dB below that in the 100 kHz bandwidth within the band that contains the highest level of the desired power, based on either an RF conducted or a radiated measurement, provided the transmitter demonstrates compliance with the peak conducted power limits. If the transmitter complies with the conducted power limits based on the use of RMS averaging over a time interval, as permitted under paragraph (b)(3) of this section, the attenuation required under this paragraph shall be 30 dB instead of 20 dB. Attenuation below the general limits specified in §15.209(a) is not required. In addition, radiated emissions which fall in the restricted bands, as defined in §15.205(a), must also comply with the radiated emission limits specified in §15.209(a) (see §15.205(c)).
Test Mode: Transmitting

5.2.Test setup

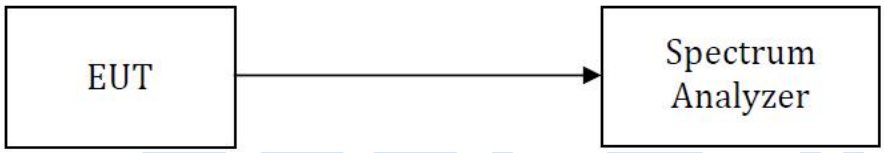

5.3.Test Procedure

1. Check the calibration of the measuring instrument using either an internal calibrator or a known signal from an external generator.
2. Position the EUT without connection to measurement instrument. Turn on the EUT and connect its antenna terminal to measurement instrument via a low loss cable. Then set it to any one measured frequency within its operating range, and make sure the instrument is operated in its linear range.
3. Set RBW to 100 kHz and VBW of spectrum analyzer to 300 kHz with a convenient frequency span including 100 kHz bandwidth from band edge.
4. Measure the highest amplitude appearing on spectral display and set it as a reference level. Plot the graph with marking the highest point and edge frequency.
5. Repeat above procedures until all measured frequencies were complete.

5.4.Test Result

Please see the attachment for data.

6. -6 dB Bandwidth and 99% Bandwidth Measurement

6.1.Limit

Test Requirement: FCC CFR47 Part 15 Section 15.247,RSS-247 5.2(a)
Test Method: KDB 558074 D01 15.247 Meas Guidance v05 August 24, 2018; ANSI C63.10:2020

6.2.Test Setup

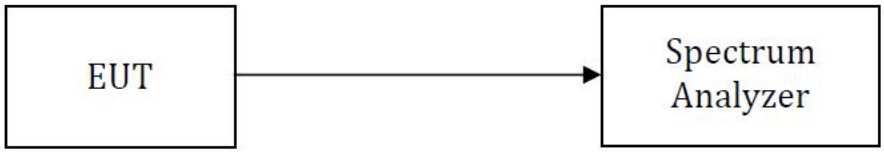

6.3.Test Procedure

For 6dB Bandwidth Measurement

1. Remove the antenna from the EUT and then connect a low RF cable from the antenna port to the spectrum;

2. Set the spectrum analyzer: RBW = 100kHz, VBW = 300kHz

For 99% Bandwidth Measurement

1. Remove the antenna from the EUT and then connect a low RF cable from the antenna port to the spectrum;

2. Set the spectrum analyzer: RBW = 1%-5% OBW, VBW ≥ 3RBW

6.4.Test Result

Please see the attachment for data.

7. Maximum Peak Output Power

7.1.Limit

Test Requirement: FCC CFR47 Part 15 Section 15.247,RSS-247 5.4(d)
Test Method: KDB 558074 D01 15.247 Meas Guidance v05 August 24, 2018;
ANSI C63.10:2020

FCC Part15 (15.247) , Subpart C				
Section	Test Item	Limit	Frequency Range (MHz)	Result
15.247(b)(3)	Peak Output Power	1 watt or 30dBm	2400-2483.5	PASS

7.2.Test Setup

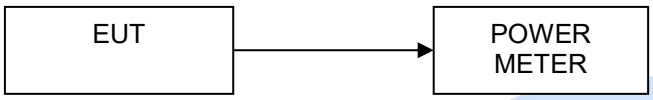

7.3.Test Procedure

7.3.1 The RF output of EUT was connected to the spectrum analyzer by RF cable and attenuator. The path loss was compensated to the results for each measurement.

7.3.2 Set to the maximum power setting and enable the EUT transmit continuously.

7.3.3 Measure the conducted output power and record the results in the test report.

7.4.Test Result

Please see the attachment for data.

8. Power Spectral density

8.1.Limit

Test Requirement: FCC CFR47 Part 15 Section 15.247,RSS-247 5.2(b)
Test Method: KDB 558074 D01 15.247 Meas Guidance v05 August 24, 2018; ANSI C63.10:2020

FCC Part15 (15.247) , Subpart C				
Section	Test Item	Limit	Frequency Range (MHz)	Result
15.247	Power Spectral Density	8dBm/3kHz	2400-2483.5	PASS

8.2.Test Setup

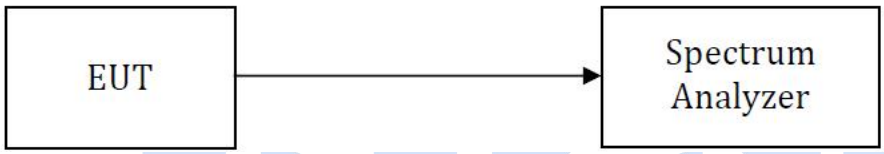

8.3.Test Procedure

KDB 558074 D01 DTS Meas Guidance v04 April 5, 2017 section 10.2
1. Remove the antenna from the EUT and then connect a low RF cable from the antenna port to the spectrum.
2. Set the spectrum analyzer: RBW = 3kHz. VBW = 10kHz, Span = 1.5 times the DTS channel bandwidth(6 dB bandwidth). Sweep = auto; Detector Function = Peak. Trace = Max hold.
3. Allow the trace to stabilize. Use the marker-delta function to determine the separation between the peaks of the adjacent channels. The limit is specified in one of the subparagraphs of this Section Submit this plot.

8.4.Test Result

Please see the attachment for data.

9. Antenna Requirement

According to the FCC Part 15 Paragraph 15.203, an intentional radiator shall be designed to ensure that no antenna other than that furnished by the responsible party shall be used with the device. This product has an integrated antenna fulfill the requirement of this section.

According to RSS-GEN section 6.8
The applicant for equipment certification shall provide a list of all antenna types that may be used with the transmitter, where applicable (i.e. for transmitters with detachable antenna), indicating the maximum permissible antenna gain (in dBi) and the required impedance for each antenna. The test report shall demonstrate the compliance of the transmitter with the limit for maximum equivalent isotropically radiated power (e.i.r.p.) specified in the applicable RSS, when the transmitter is equipped with any antenna type, selected from this list.
For expediting the testing, measurements may be performed using only the antenna with highest gain of each combination of transmitter and antenna type, with the transmitter output power set at the maximum level. However, the transmitter shall comply with the applicable requirements under all operational conditions and when in combination with any type of antenna from the list provided in the test report (and in the notice to be included in the user manual, provided below).

Result

The antenna is PCB Antenna, the best case gain of the antennas is 1.2 dBi, reference to the attachment for details.

10. Test Photographs

Please see Attachment BKC26010224AE-2.

11. Appendix I: Photos of the EUT

Please see Attachment BKC26010224AE-3 and BKC26010224AE-4.