PoC Radio

EASYTALK

D12

User Manual

Push To Talk Over Cellular Radio

1. Packing List

No.	Contents	No.	Contents
1	Host	4	Power Adapter
2	Battery	5	Back Clip
3	Charging Cable	6	Lanyard

2. Get to know the device

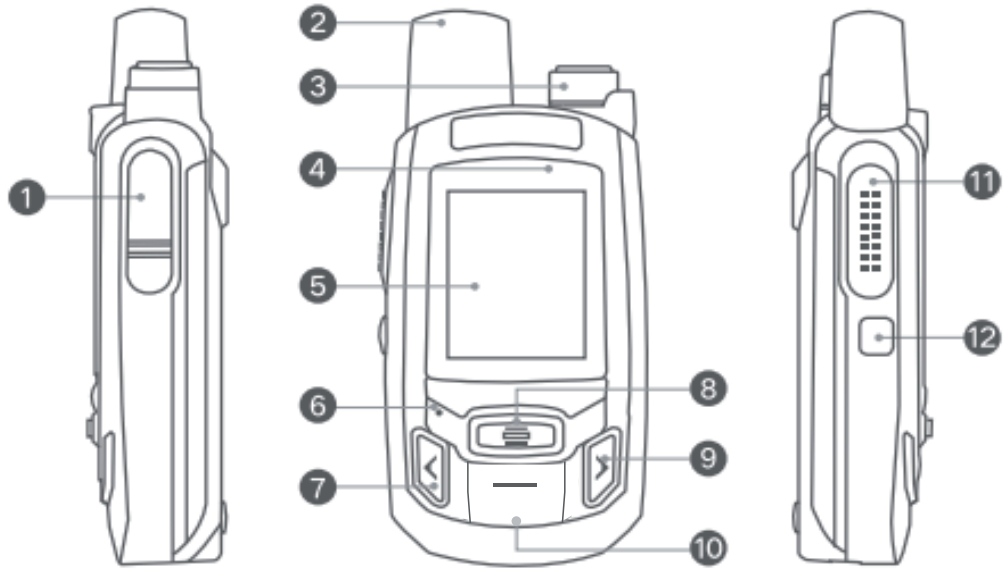

No.	Item	No.	Item
❶	Type-C accessory interface	❼	Select Button
❷	Antenna	❽	Menu/OK Button
❸	Power/Volume knob	❾	Select Button
❹	Status Indicator	❿	Select Button
❺	Display	⓫	PTT Button
❻	Microphone	⓬	Back/Lock Button

3. Battery Installation

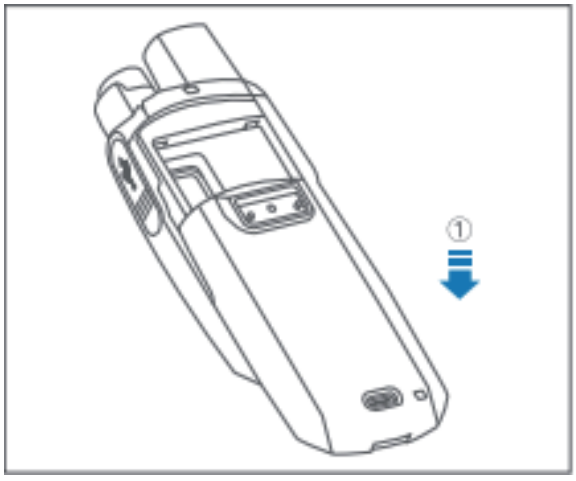

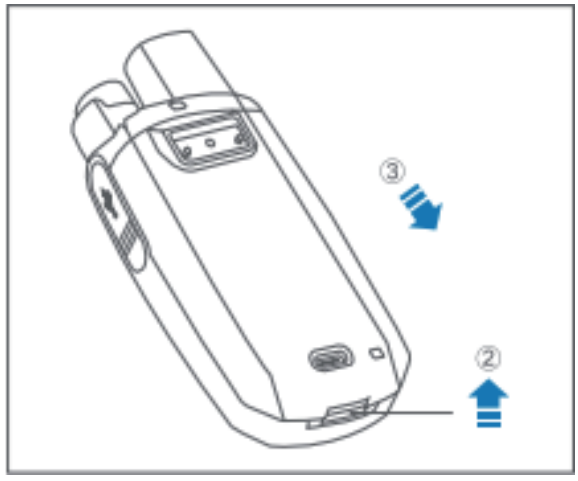

1.To install the battery as shown in①, align the battery with the sliding track on the back of the walkie-talkie, and push it upward until the battery is fully locked into the compartment.

2.To remove the battery as shown in②③, hook the bottom latch of the battery upward, and then push it downward to remove the battery.

4. Battery Charging

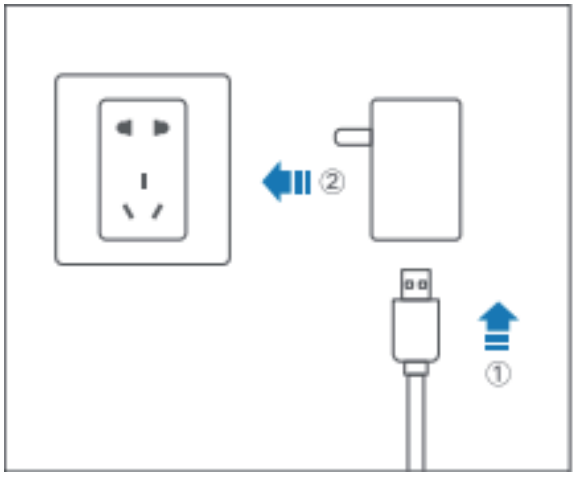

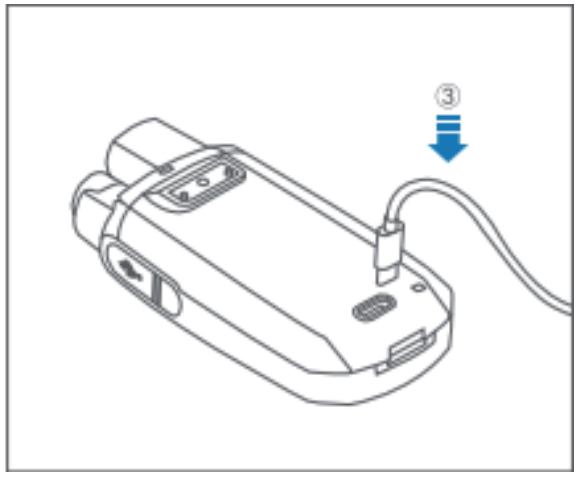

1.As shown in ① and ②, connect the charging cable to the power adapter, then plug the power adapter into an AC power outlet.

2.As shown in ③, insert the charging cable into the TYPE-C port on the back of the battery.

3.When charging with the device turned off, the red indicator light will be on to indicate that charging has started or is in progress, while the green indicator light will be on when charging is complete.

5. Belt Clip/Accessory Installation and Removal

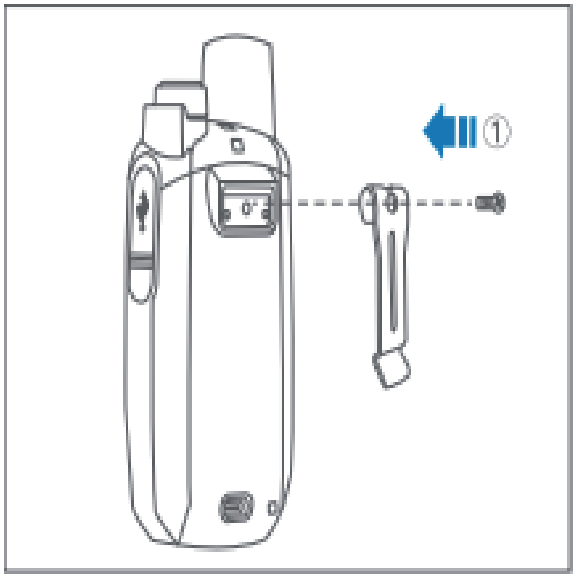

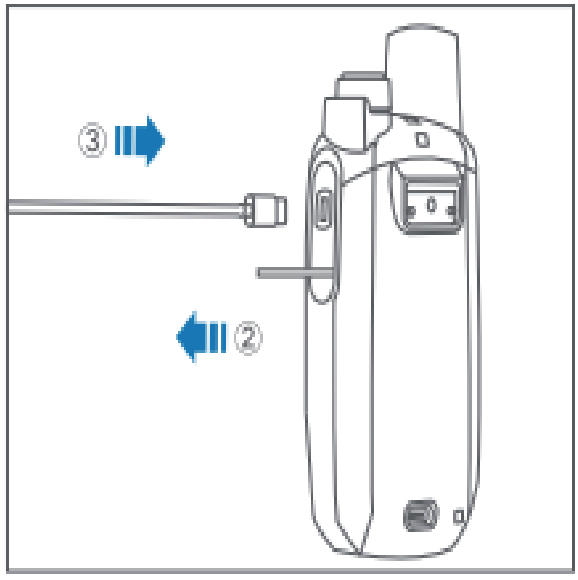

1.Installing the Belt Clip: As shown in ①, align the belt clip with the screw hole on the back of the main unit, then use a screwdriver to tighten the screws until the belt clip is securely fixed to the back cover.

2.Installing Accessories: As shown in ② and ③, flip open the accessory port cover downward, then align the connector of accessories such as the headset or programming cable with the accessory port on the side of the main unit and insert it.

6. Basic Operations

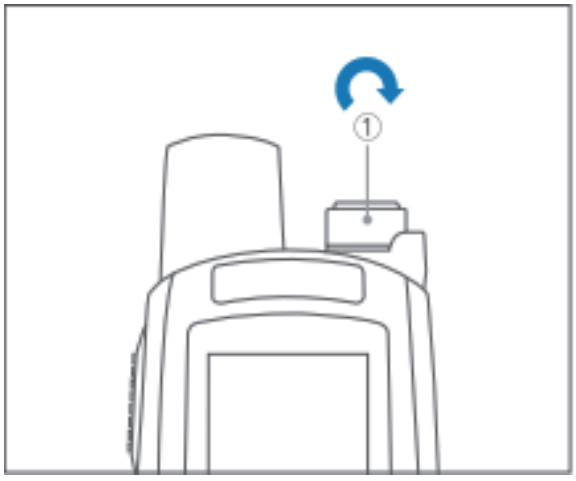

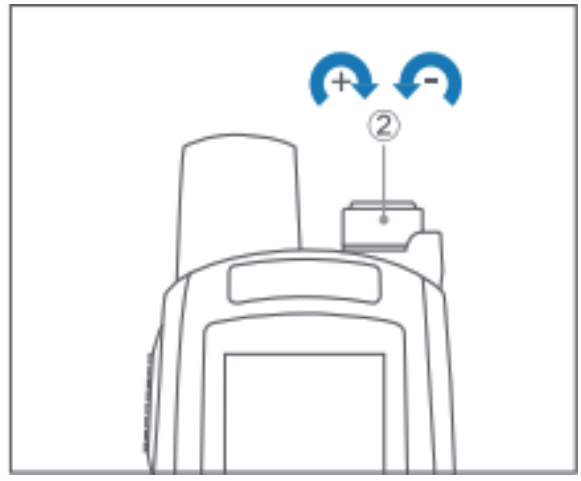

1. Power On/Off:

1.To turn on the device, as shown in ①, rotate the [Power/Volume] knob clockwise until you hear a "click" sound.

To turn off the device, rotate the knob counterclockwise until you hear the "click" sound.

Note: When you first power on the device after changing to a different carrier's SIM card, it may automatically turn off. This is normal, and you can simply turn it on again.

2. Volume Adjustment:

As shown in ②, when the device is powered on, rotate the [Pow-

er/Volume] knob to adjust the volume.

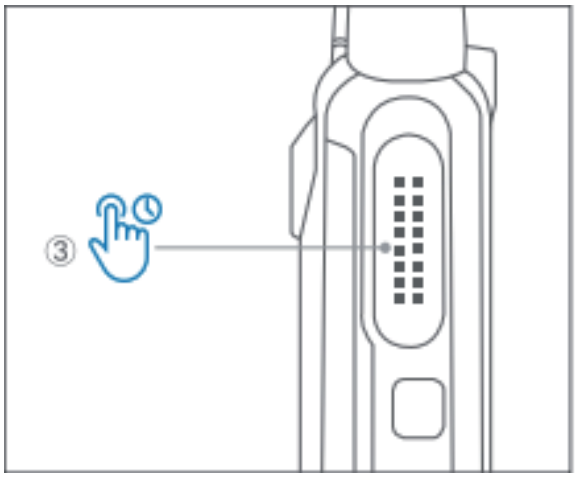

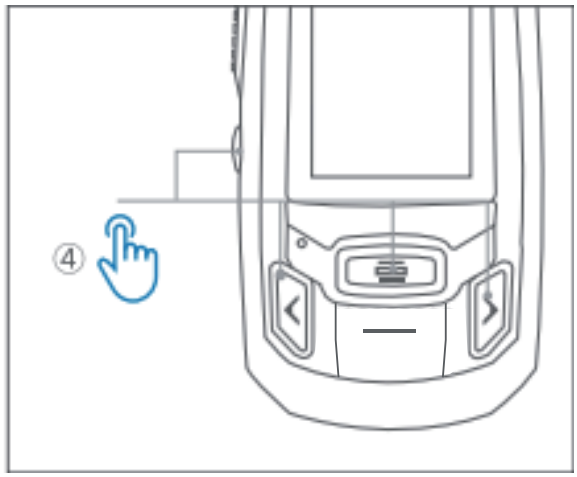

3.Making a Call:

As shown in ③, press and hold the "PTT Button" to start speaking, and release the "PTT Button" to stop speaking.

When the device is in a call state, keep the device in a vertical position, with the microphone 3-4 cm away from your mouth.

4.Function Operation:

This device provides a range of functions, which are organized in the function menu. As shown in ④ :

1.Press the [Menu Button] to enter the function list.

2.Press the [Select Button] to choose the desired function option.

3.If the selected function has a sub-menu, you can choose the required sub-menu.

4.If the selected function has another level of sub-menu, repeat step 3.

5.Press the [OK Button] to enter the desired settings.

6.To return to the previous menu, press the [Back Button].

7.Long press the [Back Button] to lock the keys, and long press again to unlock.

7. Cleaning and Maintenance

To ensure the product performs well and to extend its lifespan, please familiarize yourself with the following instructions for daily maintenance and cleaning:

· Do not pierce or scratch the product with hard objects.

· Do not store the product in environments containing corrosive substances that could damage the electronic circuits.

· When carrying or using the product, avoid pulling on the headset cable.

· When not using accessories, make sure to cover the accessory port.

· Before cleaning, please power off the device and remove the battery.

· Regularly use a clean, dry, lint-free cloth or brush to remove dust from the surface of the product and the charging contacts.

· If the buttons or casing of the product become dirty, use a neutral detergent and non-woven fabric to clean them. Avoid using detergents, alcohol, sprays, or petroleum-based chemicals, as they may

damage the product's surface.

- After cleaning, ensure the product is completely dry before use.

FCC Compliance Notice

This device complies with part 15 of the FCC Rules. Operation is subject to the following two conditions:

(1) This device may not cause harmful interference, and

(2) this device must accept any interference received, including interference that may cause undesired operation.

Any changes or modifications not expressly approved by the party responsible for compliance could void the user's authority to operate the equipment.

This equipment has been tested and found to comply with the limits for a Class B digital device, pursuant to part 15 of the FCC Rules. These limits are designed to provide reasonable protection against harmful interference in a residential installation. This equipment generates, uses and can radiate radio frequency energy and, if not installed and used in accordance with the instructions, may cause harmful interference to radio communications. However, there is no guarantee that interference will not occur in a particular installation. If this equipment does cause harmful interference to radio or television reception, which can be determined by turning the equipment off and on, the user is encouraged to try to correct the interference by one or more of the following measures:

-Reorient or relocate the receiving antenna.

-Increase the separation between the equipment and receiver.

-Connect the equipment into an outlet on a circuit different from that to which the receiver is connected.

-Consult the dealer or an experienced radio/TV technician for help.

RF Exposure Information

SAR tests are conducted using standard operating positions accepted by the FCC with the device transmitting at its highest certified power level in all tested frequency bands, although the SAR is determined at the highest certified power level, the actual SAR level of the device while operating can be well below the maximum value.

Before a new device is a available for sale to the public, it must be tested and certified to the FCC that it does not exceed the exposure limit established by the FCC, Tests for each device are performed in positions and locations as required by the FCC. For body worn operation, this device has been tested and meets the FCC RF exposure guidelines when used with an accessory designated for this product or when used with an accessory that Contains no metal. For face-up,25mm was used for test, this equipment should be installed and operated with minimum distance 25mm.

Non-compliance with the above restrictions may result in violation of RF exposure guidelines.

WARRANTY CARD

Type: _____ Purchase Date: _____

SN: _____ IMEI: _____

Sale: _____ Phone Number: _____

Customer: _____ Phone Number: _____

Address: _____

Warranty Instructions

1.This warranty card serves as the warranty certificate and will not be reissued if lost.

2.The card must be stamped and dated by the point of sale to be valid.

3.Alterations to this card are not allowed. Please ensure that the warranty card's SN and IMEI match the machine number of the purchased device; otherwise, it will be deemed invalid.

4.The warranty period is 1 year. Consumables such as back clips, chargers, earphones, and data cables are not covered under warranty.

5.Users can contact the point of purchase for repair services.

Maintenance Record

Maintenance Date	Fault Description/Reason /Handling Result	Verification Date	Maintenance Person

Push To Talk Over Cellular Radio