Shenzhen CTL Testing Technology Co., Ltd.
Tel: +86-755-89486194 E-mail: ctl@ctl-lab.com

DFS TEST REPORT

FCC PART 15 SUBPART E 15.407

Report Reference No.....: **CTL2510203021-WF04**

Compiled by: (position+printed name+signature)	Happy Guo (File administrator)	Happy Guo
Tested by: (position+printed name+signature)	Jack Wang (Test Engineer)	Jack Wang
Approved by: (position+printed name+signature)	Ivan Xie (Manager)	Ivan Xie

Product Name..... :	Biomimetic Silicone Humanoid Robots
Model/Type reference.....:	Silicone Humanoid Robots-F4
List Model(s).....:	Refer the page 2
Trade Mark..... :	N/A
FCC ID..... :	**2BUT3-SILICONE**
Applicant's name..... :	**Mind with Heart Robotics Co., Ltd.**
Address of applicant.....:	Room 908, Building 7, Qianhai Excellence Finance Center (Phase I), 5033 Menghai Ave, Qianhai, Shenzhen, China
Test Firm.....:	**Shenzhen CTL Testing Technology Co., Ltd.**
Address of Test Firm.....:	Floor 1-A, Baisha Technology Park, No.3011, Shahexi Road, Nanshan District, Shenzhen, China 518055
Test specification.....:	
Standard.....:	**47 CFR FCC Part 15 Subpart E 15.407**
TRF Originator.....:	Shenzhen CTL Testing Technology Co., Ltd.
Master TRF.....:	Dated 2011-01
Date of receipt of test item..... :	Oct. 30, 2025
Date of Test Date.....:	Oct. 30, 2025-Jan. 26, 2026
Date of Issue.....:	Jan. 27, 2026
Result..... :	**Pass**

Shenzhen CTL Testing Technology Co., Ltd. All rights reserved.

This publication may be reproduced in whole or in part for non-commercial purposes as long as the Shenzhen CTL Testing Technology Co., Ltd. is acknowledged as copyright owner and source of the material. Shenzhen CTL Testing Technology Co., Ltd. takes no responsibility for and will not assume liability for damages resulting from the reader's interpretation of the reproduced material due to its placement and context.

TEST REPORT

Test Report No. :	CTL2510203021-WF04	Jan. 27, 2026 Date of issue

Equipment under Test	:	Biomimetic Silicone Humanoid Robots
Sample No	:	CTL251020302002 CTL251020302005 CTL251020302006
Model /Type	:	Silicone Humanoid Robots-F4
Listed Models	:	Silicone Humanoid Robots-M4, Alizee Series of Silicone Humanoid Robots(F1 F2 F3 F4), Thur Series of Silicone Humanoid Robots (M1 M2 M3 M4)
Model Difference	:	All these models are identical in the same PCB, layout and electrical circuit, only the model number are different.
Applicant	:	**Mind with Heart Robotics Co., Ltd.**
Address	:	Room 908, Building 7, Qianhai Excellence Finance Center (Phase I), 5033 Menghai Ave, Qianhai, Shenzhen, China
Manufacturer	:	**Mind with Heart Robotics Co., Ltd.**
Address	:	Room 908, Building 7, Qianhai Excellence Finance Center (Phase I), 5033 Menghai Ave, Qianhai, Shenzhen, China

Test result	**Pass ***

∗ In the configuration tested, the EUT complied with the standards specified page 5.

The test report merely corresponds to the test sample.
It is not permitted to copy extracts of these test result without the written permission of the test laboratory.

** Modified History **

Revisions	Description	Issued Data	Report No.	Remark
Version 1.0	Initial Test Report Release	Jan. 27, 2026	CTL2510203021-WF04	Tracy Qi

Table of Contents Page

1. SUMMARY.....5

1.1. TEST STANDARDS.....5
1.2. TEST DESCRIPTION.....5
1.3. TEST FACILITY.....6
1.4. STATEMENT OF THE MEASUREMENT UNCERTAINTY.....6

2. GENERAL INFORMATION.....8

2.1. ENVIRONMENTAL CONDITIONS.....8
2.2. GENERAL DESCRIPTION OF EUT.....8
2.3. DESCRIPTION OF TEST MODES.....9
2.4. MEASUREMENT EQUIPMENTS USED DURING THE TEST.....9
2.5. DESCRIPTION OF SUPPORT UNITS.....9
2.6. RELATED SUBMITTAL(S) / GRANT (S).....9
2.7. MODIFICATIONS.....9

3. TEST CONDITIONS AND RESULTS.....10

3.1. APPLICABILITY.....10
3.2. REQUIREMENTS.....10
3.3. DFS DETECTION THRESHOLD VALUES.....11
3.4. PARAMETERS OF DFS TEST SIGNALS.....11
3.5. TEST AND MEASUREMENT SYSTEM.....13
3.6. RADAR WAVEFORM VERIFICATION.....14
3.7. TEST RESULT.....14

4. EUT TEST PHOTOS.....15

5. PHOTOS OF THE EUT.....16

1. SUMMARY

1.1. TEST STANDARDS

The tests were performed according to following standards:

KDB 905462 D02 UNII DFS Compliance Procedures New Rules v02

KDB 905462 D03 UNII Clients Without Radar Detection New Rules v01r02

KDB 905462 D04 Operational Modes for DFS Testing New Rules v01

FCC Rules Part 15 Subpart E—Unlicensed National Information Infrastructure Devices

1.2. Test Description

Test Description	FCC CFR 47/ ISED Rule Part	Limit	Test Result
In-Service Monitoring	15.407(h)(2)(iv)	Monitor Co-channel Radar	N/A*
Channel Availability Check	15.407 (h)(2)(ii)	60s Detection	N/A*
Channel Move Time	15.407 (h)(2)(iii)	10s	Pass
Channel Closing Transmission Time	15.407 (h)(2)(iii)	200ms + Aggregate 60ms over remaining 10s period	Pass
Non-Occupancy Period	15.407 (h)(2)(iv)	30 minutes	Pass

*Note: The EUT is a Client device without radar detection.

1.3. Test Facility

1.3.1 Address of the test laboratory

Shenzhen CTL Testing Technology Co.,Ltd.
Floor 1-A, Baisha Technology Park, No.3011, Shahexi Road, Nanshan District, Shenzhen, China 518055

The 3m-Semi anechoic test site fulfils CISPR 16-1-4 according to ANSI C63.4:2014 and CISPR 16-1-4:2010 SVSWR requirement for radiated emission above 1GHz.

1.3.2 Laboratory accreditation

The test facility is recognized, certified, or accredited by the following organizations:

A2LA-Lab Cert. No. 4343.01

Shenzhen CTL Testing Technology Co., Ltd, EMC Laboratory has been accredited by A2LA for technical competence in the field of electrical testing, and proved to be in compliance with ISO/IEC 17025: 2005 General Requirements for the Competence of Testing and Calibration Laboratories and any additional program requirements in the identified field of testing.

IC Registration No.: 9618B

CAB identifier: CN0041

The 3m alternate test site of Shenzhen CTL Testing Technology Co., Ltd. EMC Laboratory has been registered by Innovation, Science and Economic Development Canada to test to Canadian radio equipment requirements with Registration No.: 9618B.

FCC-Registration No.: 399832

Designation No.: CN1216

Shenzhen CTL Testing Technology Co., Ltd. EMC Laboratory has been registered and fully described in a report filed with the (FCC) Federal Communications Commission. The acceptance letter from the FCC is maintained in our files. Registration 399832.

1.4. Statement of the measurement uncertainty

The data and results referenced in this document are true and accurate. The reader is cautioned that there may be errors within the calibration limits of the equipment and facilities. The measurement uncertainty was calculated for all measurements listed in this test report acc. to CISPR 16 - 4 “Specification for radio disturbance and immunity measuring apparatus and methods – Part 4: Uncertainty in EMC Measurements“ and is documented in the Shenzhen CTL Testing Technology Co., Ltd. quality system acc. to DIN EN ISO/IEC 17025. Furthermore, component and process variability of devices similar to that tested may result in additional deviation. The manufacturer has the sole responsibility of continued compliance of the device.
Hereafter the best measurement capability for CTL laboratory is reported:

Test	Measurement Uncertainty	Notes
Transmitter power conducted	±0.57 dB	(1)
Transmitter power Radiated	±2.20 dB	(1)
Conducted spurious emission 9KHz-40 GHz	±2.20 dB	(1)
Occupied Bandwidth	±0.01ppm	(1)
Radiated Emission9KHz~30MHz	±3.66dB	(1)
Radiated Emission 30~1000MHz	±4.10dB	(1)
Radiated Emission Above 1GHz	±4.32dB	(1)
Conducted Disturbance0.15~30MHz	±3.20dB	(1)

(1) This uncertainty represents an expanded uncertainty expressed at approximately the 95% confidence level using a coverage factor of k=1.96.

2. GENERAL INFORMATION

2.1. Environmental conditions

During the measurement the environmental conditions were within the listed ranges:

Normal Temperature:	18-28℃
Relative Humidity:	30-60%
Air Pressure:	965-1030hPa

2.2. General Description of EUT

Product Name:	Biomimetic Silicone Humanoid Robots		
Model/Type reference:	Silicone Humanoid Robots-F4		
Power supply:	DC 11.1V from battery 6400mAh		
Working voltage:	Input: AC 100-240V~50/60Hz		
Hardware version:	V1.0		
Software version:	V1.0		
WIFI 5GHz			
	20MHz system	40MHz system	80MHz system
Supported type:	802.11a 802.11n 802.11ac 802.11ax	802.11n 802.11ac 802.11ax	802.11ac 802.11ax
Operation frequency:	5180MHz-5240MHz 5260MHz-5320MHz 5500MHz-5700MHz 5745MHz-5825MHz	5190MHz-5230MHz 5270MHz-5310MHz 5510MHz-5670MHz 5755MHz-5795MHz	5210MHz 5290MHz 5530MHz 5775MHz
Modulation:	OFDM/OFDMA	OFDM/OFDMA	OFDM/OFDMA
Channel number:	24	11	4
Channel separation:	20MHz	40MHz	80MHz
Antenna type:	ANT 1: FPC Antenna ANT 2: FPC Antenna		
Antenna gain:	BAND 1: ANT 1: 2.88dBi ANT 2: 2.62dBi BAND 2A: ANT 1: 2.33dBi ANT 2: 2.81dBi BAND 2C: ANT 1: 2.01dBi ANT 2: 2.35dBi BAND 3: ANT 1: 1.52dBi ANT 2: 2.35dBi		

Note1: For more details, please refer to the user's manual of the EUT.
Note2: Antenna gain provided by the applicant.

2.3. Description of Test Modes

The EUT operates over the 5260 MHz - 5320 MHz and 5500 MHz - 5700 MHz ranges.

The EUT is a slave device without radar detection.

The EUT one transmitter/receiver chain connected to a coaxial cable to perform conducted tests.

TPC is not required since the maximum EIRP is less than 500 mW.

The EUT utilizes the 802.11a/n/ac/ax architecture.

The nominal channel bandwidth is implemented: 20, 40,80MHz

2.4. Measurement Equipments Used during the Test

Test Equipment	Manufacturer	Model No.	Serial No.	Calibration Date	Calibration Due Date
Spectrum Analyzer	Keysight	N9020A	MY53420874	2025/04/29	2026/04/28
Vertor Signal Generator	Agilent	N5182A	MY50142850	2025/04/29	2026/04/28
Power measurement module	TSTPASS	TSPS2023R	TSCB220016	2025/04/29	2026/04/28
Test Software					
Name of Software			Version		
JS1120-3			V2.0		

The calibration interval was one year

2.5. Description of Support Units

The EUT has been tested as an independent unit together with other necessary accessories or support units. The following support units or accessories were used to form a representative test configuration during the tests.

No.	Product	Manufacturer	Model	Certification
1	Router	NETGEAR, Inc.	RAX50	FCC ID:PY319400466
2	Router	ASUSTek Computer Inc	RT-AX82U V2	MSQ-RTAX6100
3	Notebook computer	Huawei Technologies Co Ltd	KPL-W00	FCC
4	HUAWEI SuperCharge	Huawei Technologies Co Ltd	KPL-W00	FCC

2.6. Related Submittal(s) / Grant (s)

This submittal(s) (test report) is intended to comply with Section 15.407 of the FCC Part 15, Subpart E Rules.

2.7. Modifications

No modifications were implemented to meet testing criteria.

3. TEST CONDITIONS AND RESULTS

3.1. APPLICABILITY

The following table from KDB905462 D02 v02 lists the applicable requirements for the DFS testing. The device evaluated in this report is considered a client device without radar detection capability.

Table 3-1. DFS Applicability

Requirement	Operation Mode		
	Master	Client Without Radar Detection	Client With Radar Detection
Non-Occupancy Period	Yes	Not required	Yes
DFS Detection Threshold	Yes	Not required	Yes
Channel Availability Check Time	Yes	Not required	Not required
Uniform Spreading	Yes	Not required	Not required
U-NII Detection Bandwidth	Yes	Not required	Yes

Table 3-2. DFS Applicability during Normal Operation

Requirement	Operation Mode		
	Master	Client Without Radar Detection	Client With Radar Detection
DFS Detection Threshold	Yes	Not required	Yes
Channel Closing Transmission Time	Yes	Yes	Yes
Channel Move Time	Yes	Yes	Yes
U-NII Detection Bandwidth	Yes	Not required	Yes

3.2. REQUIREMENTS

Per KDB905462 D02 v02 (04/08/2016) the following are the requirements for Client Devices:

a) A Client Device will not transmit before having received appropriate control signals from a Master Device.

b) A Client Device will stop all its transmissions whenever instructed by a Master Device to which it is associated and will meet the Channel Move Time and Channel Closing Transmission Time requirements.
The Client Device will not resume any transmissions until it has again received control signals from a Master Device.

c) If a Client Device is performing In-Service Monitoring and detects a Radar Waveform above the DFS Detection Threshold, it will inform the Master Device. This is equivalent to the Master Device detecting the Radar Waveform and d) through f) of section 5.1.1 apply.

d) Irrespective of Client Device or Master Device detection the Channel Move Time and Channel Closing Transmission Time requirements remain the same.

Channel Move Time and Channel Closing Transmission Time requirements are listed following table.

Table 3-3: DFS Response requirements

Parameter	Value
Non-occupancy period	Minimum 30 minutes
Channel Availability Check Time	60 seconds
Channel Move Time	10 seconds Note 1
Channel Closing Transmission Time	200 milliseconds + an Aggregate of 60 milliseconds over Remaining 10 second period Notes1 and 2
U-NII Detection Bandwidth	Minimum 100 % of the U-NII99 % transmission Power bandwidthNote 3

Note 1: Channel Move Time and the Channel Closing Transmission Time should be performed with Radar Type 0. The measurement timing begins at the end of the Radar Type 0 burst.

Note 2: The Channel Closing Transmission Time is comprised of 200 milliseconds starting at the beginning of The Channel Move Time plus any additional intermittent control signals required to facilitate a Channel move (an aggregate of 60 milliseconds) during the remainder of the 10 second period. The aggregate duration of control signals will not count quiet periods in between transmissions.

Note3: During the U-NII Detection Bandwidth detection test, radar type 0 should be used. For each frequency step the minimum percentage of detection is 90 percent. Measurements are performed with no data traffic.

3.3. DFS DETECTION THRESHOLD VALUES

The DFS detection thresholds are defined for Master devices and Client Devices with In-service monitoring. These detection thresholds are listed in the following table.

Table 3-4: Detection Thresholds for Master Devices and Client Devices with Radar Detection

Maximum Transmit Power	Value (See Notes 1 and 2)
⩾ 200 milliwatt	-64 dBm
EIRP < 200 milliwatt and power spectral density < 10 dBm/MHz	-62 dBm
EIRP < 200 milliwatt that do not meet the power spectral density requirement	-64 dBm

Note 1: This is the level at the input of the receiver assuming a 0 dBi receive antenna.

Note 2: Throughout these test procedures an additional 1 dB has been added to the amplitude of the test transmission waveforms to account for variations in measurement equipment. This will ensure that the test signal is at or above the detection threshold level to trigger a DFS response.

Note3: EIRP is based on the highest antenna gain. For MIMO devices refer to KDB Publication 662911 D01.

3.4. PARAMETERS OF DFS TEST SIGNALS

As the EUT is a Client Device with no Radar Detection only one type radar pulse is required for the testing. Radar Pulse type 0 was used in the evaluation of the Client device for the purpose of measuring the Channel Move Time and the Channel Closing Transmission Time. Table 3-5 lists the parameters for the Short Pulse Radar Waveforms. A plot of the Radar pulse Type 0 used for testing is included in Section 3.6 of this report.

Table 3-5: Parameters for Short Pulse Radar Waveforms

Radar Type	Pulse Width (µsec)	PRI (µsec)	Number Of Pulses	Minimum Percentage of Successful Detection	Minimum Number of Trials
0	1	1428	18	See Note 1	See Note 1
1	1	Test A: 15 unique PRI values Randomly selected From the list of 23 PRI values in Table 5a	$\text{Roundup}\left\{\left[\frac{1}{360}\right]\left[\frac{19\cdot 10^6}{PRI_{\mu sec}}\right]\right\}$	60%	30
		Test B: 15 unique PRI values Randomly selected within the range of 518-3066 µ sec, with a minimum increment of 1 µ sec, excluding PRI values selected in Test A			
2	1-5	150-230	23-29	60%	30
3	6-10	200-500	16-18	60%	30
4	11-20	200-500	12-16	60%	30
				80%	120

Note1: Short pulse Radar Type 0 should be used for the detection bandwidth test, channel move time, and channel closing time tests.

3.5. TEST AND MEASUREMENT SYSTEM

General Test Setup Procedure:

1. The EUT was operating 802.11a, 802.11n_HT20, 802.11ac_VHT20 during the test.
2. Connect FCC approved Master AP to a network, via wired Ethernet, that allows connection to an FTP server.
3. Associate the EUT with the Master AP.
4. Launch the FTP application on the EUT.
5. Connect to the FTP server application to the FTP server hosting the file
6. Initiate an FTP download of the file from the host.
7. Monitor the channel loading during transfer.
8. Reduce the maximum allowed data rate for the Master AP, using the AP's GUI interface.
9. Repeat steps 5-7 until the channel loading is as close to 20 % as possible.
10. Record the data rate setting on the Master AP and the channel loading.
11. While the system is performing an FTP transfer using the settings form item 9 above, perform the Channel Closing Transmission Time and Channel Move Time Measurements as required by KDB905462 D02 v02 using a conducted test.

PROCEDURE

The KDB905462 D02 v02 describes a radiated test setup and a conducted test setup. A conducted test setup was used for this testing. Figure 3-1 shows the typical test setup. Each one channel selected between 5260 and 5320 MHz, 5500 and 5700 is chosen for the testing.

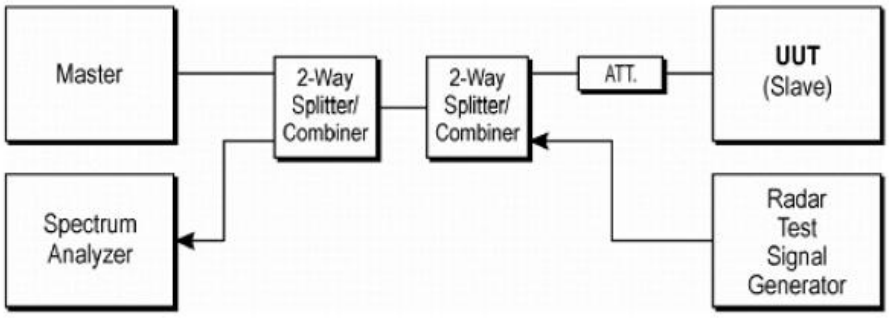

Figure 3-1. Conducted Test Setup for DFS

1. The radar pulse generator is setup to provide a pulse at the frequency that the Master and Client are operating. A Type 0 radar pulse with a 1 μs pulse width and a 1428 μs PRI is used for the testing.
2. The vector signal generator is adjusted to provide the radar burst (18 pulses) at a level of approximately -62 dBm at the antenna of the Master device.
3. The Client Device (EUT) is set up per the diagram in Figure 3-1 and communications between the Master device and the Client is established.
4. The MPEG file specified by the FCC (*"6½ Magic Hours"*) is streamed from the "file computer" through the Master to the Slave Device and played in full motion video using Media Player Classic Ver.6.4.8.6 in order to properly load the network.

5. The spectrum analyzer is set to record about 15 sec window to any transmissions occurring up to and after 10 sec.
6. The system is again setup and the monitoring time is shortened in order to capture the Channel Closing Transmission Time. This time is measured to insure that the Client ceases transmission within 200 ms and the aggregate of emissions occurring after 200 ms up to 10 sec do not exceed 60 ms.
   (Note: the channel may be different since the Master and Client have changed channels due to the detection of the initial radar pulse.)
7. After the initial radar burst the channel is monitored for 30 minutes to insure no transmissions or beacons occur. A second monitoring setup is used to verify that the Master and Client have both moved to different channels.

3.6. Radar Waveform Verification

A-50-ohm load is connected in place of the spectrum analyzer, and the spectrum analyzer is connected to a coaxial cable. The signal generator is set to CW mode. The amplitude of the signal generator is adjusted to yield a level of - 62 dBm as measured on the spectrum analyzer.

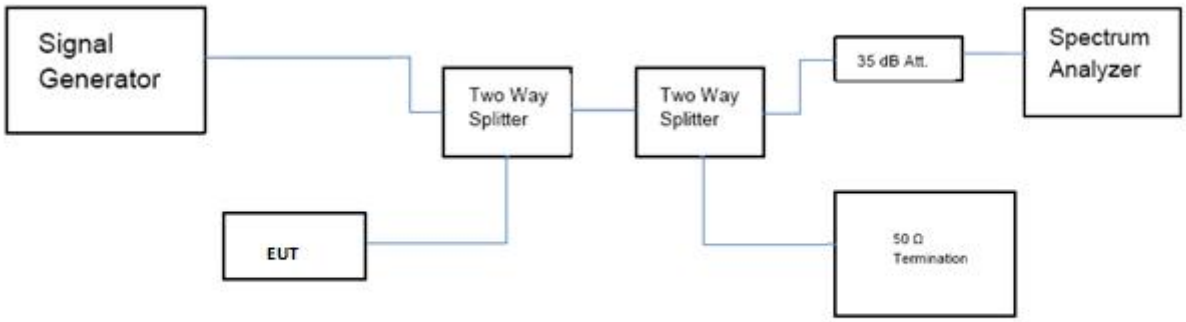

Figure 3-2 Test Setup for Conducted Measurement Radar Verification

3.7. TEST RESULT

According to 905462 D02V02, Channel Move Time and Channel Closing Transmission Time Test using the widest BW mode for each WIFI operation modes.

Raw data reference to CTL2510203021-WF04_5G_BAND_2A_DFS_Appendix.
Raw data reference to CTL2510203021-WF04_5G_BAND_2C_DFS_Appendix.

4. EUT TEST PHOTOS

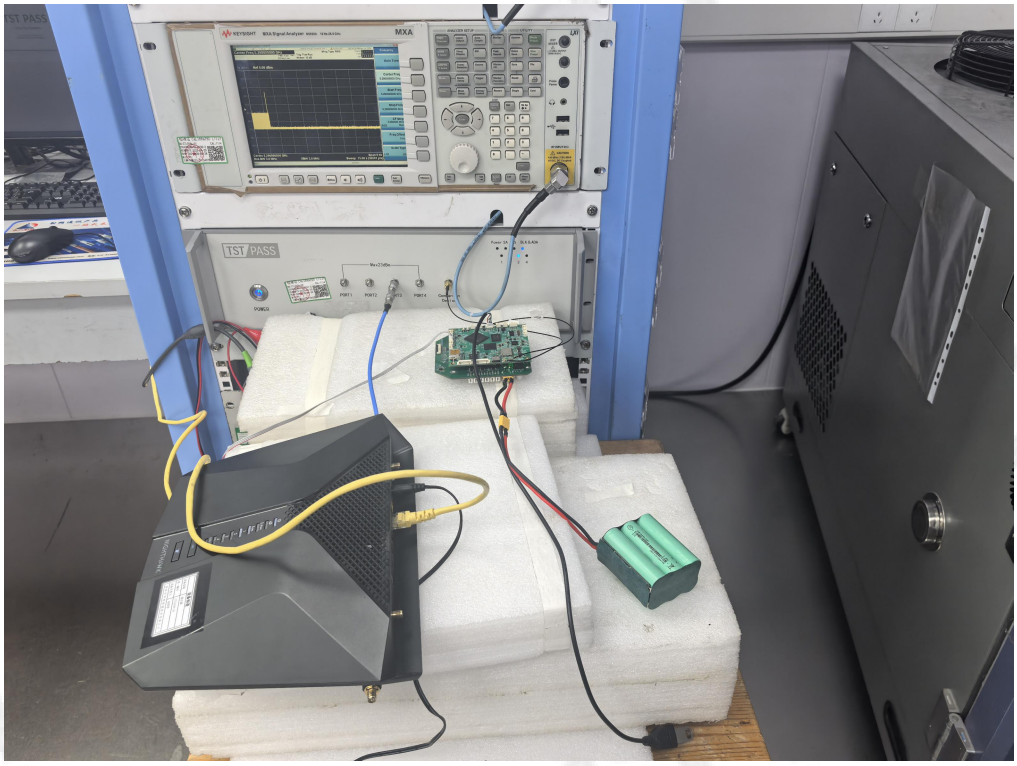

5. Photos of the EUT

Reference to the test report No.CTL2510203021-WF01

********** **End of Report** **********