SHENZHEN HUAXIA TESTING TECHNOLOGY CO., LTD

102A, 102B, Building 2, Shanghenglang New Industrial Zone, Shanghenglang Community, Dalang Street, Longhua District, Shenzhen, Guangdong, People's Republic of China, 518000

Telephone: +86-755-26648640
Fax: +86-755-26648637
Website: www.cqa-cert.com

Report Template Version: V06
Report Template Revision Date: 2026-01-30

Test Report

Report No. :	CQASZ20260100282E-06
Applicant:	SHENZHEN ZEROONE TECHNOLOGY CO., LIMITED
Address of Applicant:	701-714, Bldg #6,219, Bldg #8, Hengda Fashion Huigu Building, Fulong Road, Henglang Community, Dalang Street, Longhua Dist, Shenzhen

Equipment Under Test (EUT):

Product:	MINI PC
Model No.:	BOX-1212 PLUS, Y10
Test Model No.:	BOX-1212 PLUS
Brand Name:	N/A
FCC ID:	2BUYT-BOX-1212PLUS
Standards:	47 CFR Part 15, Subpart E KDB 789033 D02 General UNII Test Procedures New Rules v02 KDB 558074 D01 Meas Guidance v05
Date of Receipt:	2026-01-29
Date of Test:	2026-01-29 to 2026-03-12
Date of Issue:	2026-3-30
Test Result :	**PASS***

***In the configuration tested, the EUT complied with the standards specified above**

The test report is effective only with both signature and specialized stamp, The result(s) shown in this report refer only to the sample(s) tested. Without written approval of CQA, this report can't be reproduced except in full.

Tested By: lewis zhou

(Lewis Zhou)

Reviewed By: Timo Lei

(Timo Lei)

Approved By:

(Jack Ai)

2 Version

Revision History Of Report

Report No.	Version	Description	Issue Date
CQASZ20260100282E-06	Rev.01	Initial report	2026-3-30

3 Test Summary

Test Item	Test Requirement	Test method	Result
Non-Occupancy Period	47 CFR Part 15 Subpart E Section 15.407 (h)(2)(iv)	FCC Order, ET Docket No.03-122 (FCC 06-96)	N/A[1)]
DFS Detection Threshold	47 CFR Part 15 Subpart E Section 15.407 (h)(2)	FCC Order, ET Docket No.03-122 (FCC 06-96)	N/A[1)]
Channel Availability Check Time	47 CFR Part 15 Subpart E Section 15.407 (h)(2)(ii)	FCC Order, ET Docket No.03-122 (FCC 06-96)	N/A[1)]
Uniform Spreading	47 CFR Part 15 Subpart E Section 15.407 (h)(2)	FCC Order, ET Docket No.03-122 (FCC 06-96)	N/A[1)]
U-NII Detection Bandwidth	47 CFR Part 15 Subpart E Section 15.407 (h)(2)	FCC Order, ET Docket No.03-122 (FCC 06-96)	N/A[1)]
Channel Closing Transmission Time	47 CFR Part 15 Subpart E Section 15.407 (h)(2)(iii)	FCC Order, ET Docket No.03-122 (FCC 06-96)	PASS
Channel Move Time	47 CFR Part 15 Subpart E Section 15.407 (h)(2)(iii)	FCC Order, ET Docket No.03-122 (FCC 06-96)	PASS

Remark:
The tested sample(s) and the sample information are provided by the client.
Tx: In this whole report Tx (or tx) means Transmitter.
Rx: In this whole report Rx (or rx) means Receiver.
RF: In this whole report RF means Radiated Frequency.
CH: In this whole report CH means channel.
Volt: In this whole report Volt means Voltage.
Temp: In this whole report Temp means Temperature.
Humid: In this whole report Humid means humidity.
Press: In this whole report Press means Pressure.
N/A: In this whole report not application.
N/A[1)]: The operation mode of tested sample only is client without radar detection, therefore it is not required.
Model No.: Skylight 2, D104S
Only the model Skylight 2 was tested, since the electrical circuit design, layout, components used and internal wiring were identical for the above models, Only the models are different.

4 Content

.....1
2 VERSION 3
3 TEST SUMMARY 4
4 CONTENT 5
5 TEST REQUIREMENT 6
5.1 TEST SETUP 6
5.1.1 *For Conducted test setup* 6
5.1.2 *Slave and Client device(EUT) block diagram of Test setup* 6
5.1.3 *Mast device(EUT) block diagram of Test setup* 6
5.2 TEST ENVIRONMENT 7
5.3 TEST CONDITION 7
5.3.1 *Radar test waveforms* 7
5.3.2 *Technical requirement* 9
6 GENERAL INFORMATION 10
6.1 CLIENT INFORMATION 10
6.2 GENERAL DESCRIPTION OF EUT 10
6.3 GENERAL DESCRIPTION OF 5G WIFI CLASSIC 11
6.4 DESCRIPTION OF SUPPORT UNITS 12
6.5 EST LOCATION 12
6.6 TEST FACILITY 12
6.7 DEVIATION FROM STANDARDS 12
6.8 ABNORMALITIES FROM STANDARD CONDITIONS 12
6.9 OTHER INFORMATION REQUESTED BY THE CUSTOMER 12
6.10 MEASUREMENT UNCERTAINTY (95% CONFIDENCE LEVELS, K=2) 12
7 EQUIPMENT LIST 14
8 RADIO TECHNICAL REQUIREMENTS SPECIFICATION 15
Appendix A)Channel Closing Transmission and Channel Move Time 16

5 Test Requirement

5.1 Test setup

5.1.1 For Conducted test setup

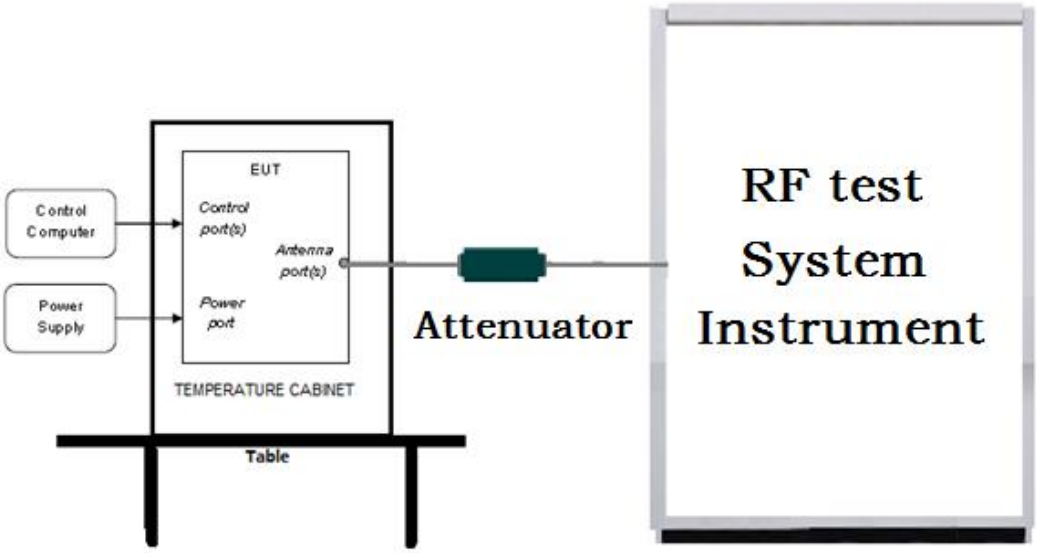

5.1.2 Slave and Client device(EUT) block diagram of Test setup

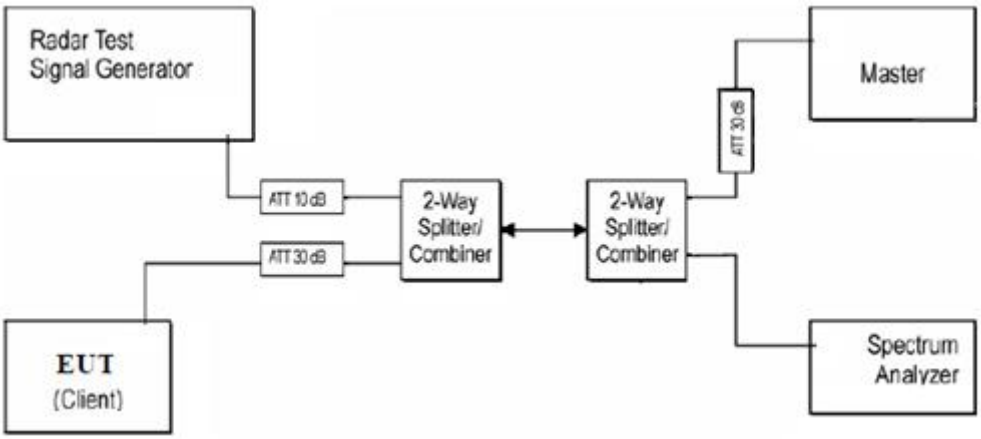

5.1.3 Mast device(EUT) block diagram of Test setup

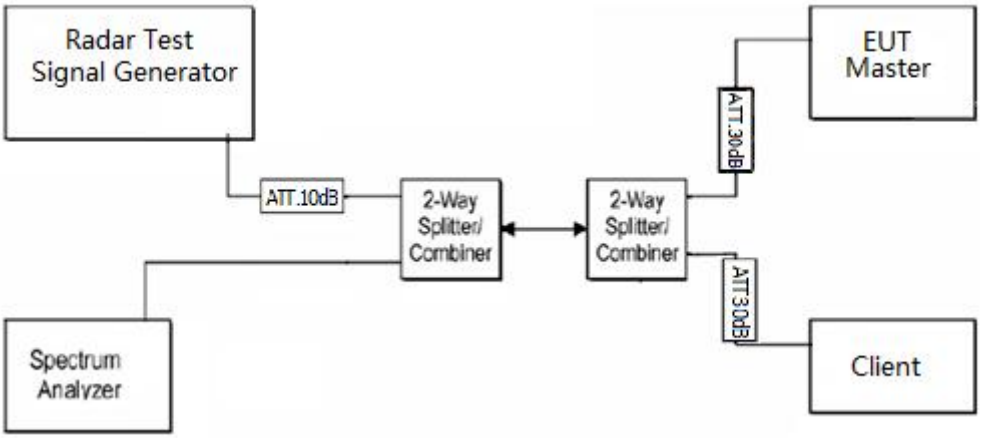

5.2 Test Environment

Operating Environment:	
Temperature:	20 °C
Humidity:	53 % RH
Atmospheric Pressure:	1010mbar

5.3 Test Condition

5.3.1 Radar test waveforms

This section provides the parameters for required test waveforms, minimum percentage of successful detections, and the minimum number of trials that must be used for determining DFS conformance. Step intervals of 0.1 microsecond for Pulse Width, 1 microsecond for PRI, 1 MHz for chirp width and 1 for the number of pulses will be utilized for the random determination of specific test waveforms.

a) Short Pulse Radar Test Waveforms

Radar Type	Pulse width (μsec)	PRI (μsec)	Number of Pulses	Minimum Percentage of Successful Detection	Minimum Number of Trials
1	1	1428	18	60%	30
2	1-5	150-230	23-29	60%	30
3	6-10	200-500	16-18	60%	30
4	11-20	200-500	12-16	60%	30
Aggregate(Radar Types 1-4)				80%	120

A minimum of 30 unique waveforms are required for each of the Short Pulse Radar Types 2 through 4.For Short Pulse Radar Type 1, the same waveform is used a minimum of 30 times. If more than 30waveforms are used for Short Pulse Radar Types 2 through 4, then each additional waveform must also be unique and not repeated from the previous waveforms.

The aggregate is the average of the percentage of successful detections of Short Pulse Radar Types 1-4.

b) Long Pulse Radar Test Waveform

Radar Type	Pulse width (μsec)	Chirp Width (MHz)	PRI (μsec)	Number of Pulses per Burst	Number of Burst	Minimum Percentage of Successful Detection	Minimum Number of Trials
5	50-100	5-20	1000-2000	1-3	8-20	80%	30

The parameters for this waveform are randomly chosen. Thirty unique waveforms are required for the Long Pulse Radar Type waveforms. If more than 30 waveforms are used for the Long Pulse Radar Type waveforms, then each additional waveform must also be unique and not repeated from the previous waveforms.

Each waveform is defined as follows:

1) The transmission period for the Long Pulse Radar test signal is 12 seconds.
2) There are a total of 8 to 20 Bursts in the 12 second period, with the number of Bursts being randomly chosen. This number is Burst_Count.
3) Each Burst consists of 1 to 3 pulses, with the number of pulses being randomly chosen. Each Burst within the 12 second sequence may have a different number of pulses.
4) The pulse width is between 50 and 100 microseconds, with the pulse width being randomly chosen. Each pulse within a Burst will have the same pulse width. Pulses in different Bursts may have different pulse widths.
5) Each pulse has a linear frequency modulated chirp between 5 and 20 MHz, with the chirp width being randomly chosen. Each pulse within a Burst will have the same chirp width. Pulses indifferent Bursts may have different chirp widths. The chirp is centered on the pulse. For example, with a radar frequency of 5300 MHz and a 20 MHz chirped signal, the chirp starts at5290 MHz and ends at 5310 MHz.
6) If more than one pulse is present in a Burst, the time between the pulses will be between 1000 and2000 microseconds, with the time being randomly chosen. If three pulses are present in a Burst,the random time interval between the first and second pulses is chosen independently of the random time interval between the second and third pulses.
7) The 12 second transmission period is divided into even intervals. The number of intervals is equal to Burst_Count. Each interval is of length (12,000,000 / Burst_Count) microseconds. Each interval contains one Burst. The start time for the Burst, relative to the beginning of the interval,is between 1 and [(12,000,000 / Burst_Count) – (Total Burst Length) + (One Random PRI Interval)] microseconds, with the start time being randomly chosen. The step interval for the start time is 1 microsecond. The start time for each Burst is chosen randomly.

A representative example of a Long Pulse Radar Type waveform:

1) The total test waveform length is 12 seconds.
2) Eight (8) Bursts are randomly generated for the Burst_Count.
3) Burst 1 has 2 randomly generated pulses.
4) The pulse width (for both pulses) is randomly selected to be 75 microseconds.
5) The PRI is randomly selected to be at 1213 microseconds.
6) Bursts 2 through 8 are generated using steps 3 – 5.
7) Each Burst is contained in even intervals of 1,500,000 microseconds. The starting location for Pulse 1, Burst 1 is randomly generated (1 to 1,500,000 minus the total Burst 1 length + 1 random PRI interval) at the 325,001 microsecond step. Bursts 2 through 8 randomly fall in successive1,500,000 microsecond intervals (i.e. Burst 2 falls in the 1,500,001 – 3,000,000 microsecond range).

Graphical representation of the Long Pulse Radar Test Waveform.

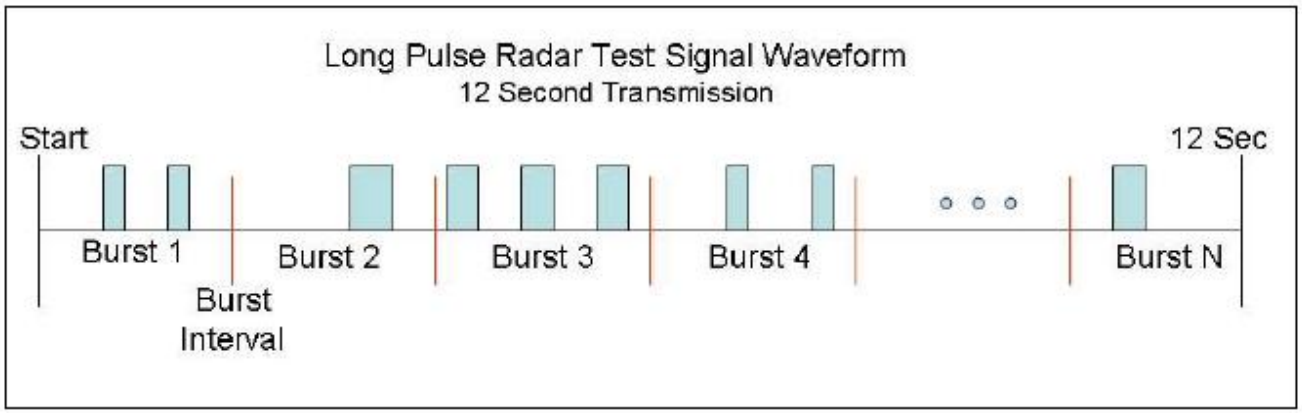

c) Frequency Hopping Radar Test Waveform

Radar Type	Pulse width (μsec)	PRI (μsec)	Pulses per Hop	Hopping Rate (kHz)	Hopping Sequence Length (m sec)	Minimum Percentage of Successful Detection	Minimum Number of Trials
6	1	333	9	0.333	300	70%	30

For the Frequency Hopping Radar Type, the same Burst parameters are used for each waveform. The hopping sequence is different for each waveform and a 100-length segment is selected from the hopping sequence defined by the following algorithm.

d) Radar Waveform Calibration

The following equipment setup was used to calibrate the conducted radar waveform. A spectrum analyzer was used to establish the test signal level for each radar type. During this process there were replace 50ohm terminal from master and client device and no transmissions by either the master or client device. The spectrum analyzer was switched to the zero span (time domain) at the frequency of the radar waveform generator. Peak detection was utilized. The spectrum analyzer resolution bandwidth (RBW) and video bandwidth (VBW) were set to 3MHz and 3 MHz.

The signal generator amplitude was set so that the power level measured at the spectrum analyzer was -61dBm due to the interference threshold level is not required.

Conducted Calibration Setup

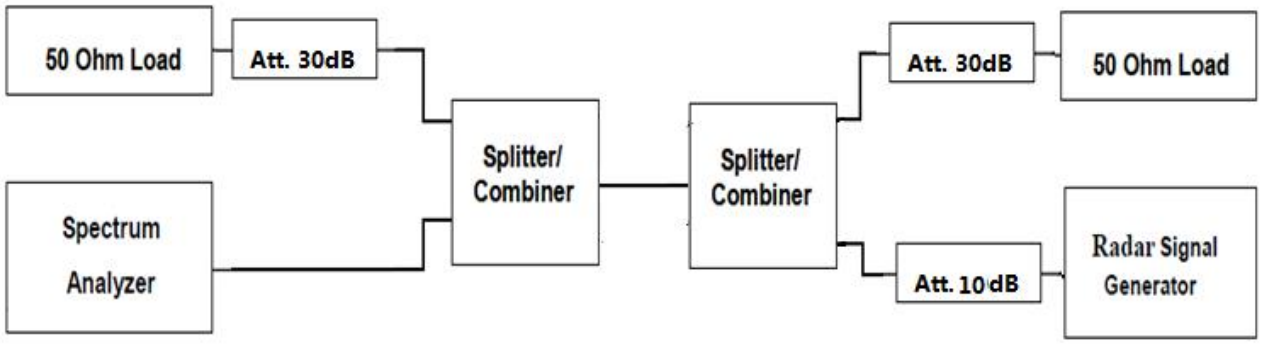

5.3.2 Technical requirement

a) Applicability of DFS Requirements

Applicability of DFS Requirements Prior to Use of a Channel

Requirement	Operation Mode		
	Master	Client without Radar Detection	Client with Radar Detection
Non-Occupancy Period	Yes	Not require	Yes
DFS Detection Threshold	Yes	Not require	Yes
Channel Availability Check Time	Yes	Not require	Not require
Uniform Spreading	Yes	Not require	Not require
U-NII Detection Bandwidth	Yes	Not require	Yes

Applicability of DFS requirements during normal operation

Requirement	Operation Mode		
	Master	Client without Radar Detection	Client with Radar Detection
DFS Detection Threshold	Yes	Not require	Yes
Channel Closing Transmission Time	Yes	Yes	Yes
Channel Move Time	Yes	Yes	Yes
U-NII Detection Bandwidth	Yes	Not require	Yes

b) DFS Detection Thresholds and Response Requirement

DFS Detection Thresholds for Master Devices and Client Devices With Radar Detection

Maximum Transmit Power	Value(See Notes 1 and 2)
≥ 200 milliwatt	-64 dBm
< 200 milliwatt	-62 dBm

Note 1: This is the level at the input of the receiver assuming a 0 dBi receive antenna.
Note 2: Throughout these test procedures an additional 1 dB has been added to the amplitude of the test transmission waveforms to account for variations in measurement equipment. This will ensure that the test signal is at or above the detection threshold level to trigger a DFS response.

DFS Response Requirement Values

Parameter	Value
Non- occupancy period	Minimum 30 minutes
Channel Availability Check Time	60 seconds
Channel Move Time	10 seconds See Note 1
Channel Closing Transmission Time	200 milliseconds + an aggregate of 60milliseconds over remaining 10 second period. See Notes 1 and 2
U-NII Detection Bandwidth	Minimum 80% of the UNII99% transmission power bandwidth See Note 3

Note 1: The instant that the Channel Move Time and the Channel Closing Transmission Time begins is as follows:

- For the Short Pulse Radar Test Signals this instant is the end of the Burst.
- For the Frequency Hopping radar Test Signal, this instant is the end of the last radar Burst generated.
- For the Long Pulse Radar Test Signal this instant is the end of the 12 second period defining the Radar Waveform.

Note 2: The Channel Closing Transmission Time is comprised of 200 milliseconds starting at the beginning of the Channel Move Time plus any additional intermittent control signals required to facilitate a Channel move (an aggregate of 60 milliseconds) during the remainder of the 10second period. The aggregate duration of control signals will not count quiet periods in between transmissions.

Note 3: During the U-NII Detection Bandwidth detection test, radar type 1 is used and for each frequency step the minimum percentage of detection is 90 percent. Measurements are performed with no data traffic.

6 General Information

6.1 Client Information

Applicant:	SHENZHEN ZEROONE TECHNOLOGY CO., LIMITED
Address of Applicant:	701-714, Bldg #6,219, Bldg #8, Hengda Fashion Huigu Building, Fulong Road, Henglang Community, Dalang Street, Longhua Dist, Shenzhen
Manufacturer:	SHENZHEN ZEROONE TECHNOLOGY CO., LIMITED
Address of Manufacturer:	701-714, Bldg #6,219, Bldg #8, Hengda Fashion Huigu Building, Fulong Road, Henglang Community, Dalang Street, Longhua Dist, Shenzhen
Factory:	SHENZHEN ZEROONE TECHNOLOGY CO., LIMITED
Address of Factory:	220, Bldg #8, Hengda Fashion Huigu Building, Fulong Road, Henglang Community, Dalang Street, Longhua Dist, Shenzhen

6.2 General Description of EUT

Product Name:	MINI PC
Model No.(EUT):	BOX-1212 PLUS, Y10
Test Model No.:	BOX-1212 PLUS
Trade Mark:	N/A
Location for use:	indoor
EUT Supports Radios application:	5GHz: Wi-Fi: U-NII-1: 5.15-5.25GHz; U-NII-2a: 5.25-5.35GHz *U*-NII-2c: 5.47-5.725GHz; U-NII-3: 5.725-5.850GHz
Power Supply:	Power supply DC 12V form adapter
	Adapter: Model:AD0361-1203000UB Input:100-240V~50-60Hz 1.0A Max Output:12.0V⎓3.0A 36.0W
Software Version:	V1.0
Hardware Version:	V1.0

6.3 General Description of 5G WIFI Classic

Operation Frequency:	IEEE 802.11a/n/ac(20M): 5150MHz ~5250 MHz IEEE802.11n/ac(40M): 5150MHz ~5250 MHz IEEE802.11n/ac(80M): 5150MHz ~5250 MHz IEEE 802.11a/n/ac(20M): 5250MHz ~5350 MHz IEEE802.11n/ac(40M): 5250MHz ~5350 MHz IEEE802.11n/ac(80M): 5250MHz ~5350 MHz IEEE 802.11a/n/ac(20M): 5470MHz ~5725 MHz IEEE802.11n/ac(40M): 5470MHz ~5725 MHz IEEE802.11n/ac(80M): 5470MHz ~5725 MHz IEEE 802.11a/n/ac(20M): 5725MHz ~5850 MHz IEEE802.11n/ac(40M): 5725MHz ~5850 MHz IEEE802.11n/ac(80M): 5725MHz ~5850 MHz
Channel Numbers:	IEEE 802.11a/n/ac(20M): 5150MHz ~5250MHz/ 4 channel IEEE 802.11n/ac(40M): 5150MHz ~5250MHz/ 2 channel IEEE 802.11n/ac(80M): 5150MHz ~5250MHz/ 1 channel IEEE 802.11a/n/ac(20M): 5250MHz ~5350MHz/ 4 channel IEEE 802.11n/ac(40M): 5250MHz ~5350MHzHz/ 2 channel IEEE 802.11n/ac(80M): 5250MHz ~5350MHzHz/ 1 channel IEEE 802.11a/n/ac(20M): 5470MHz ~5725MHz/ 9 channel IEEE 802.11n/ac(40M): 5470MHz ~5725MHz/ 4 channel IEEE 802.11n/ac(80M): 5470MHz ~5725MHz/ 2 channel IEEE 802.11a/n/ac(20M): 5725MHz ~5850MHz/ 5 channel IEEE 802.11n/ac(40M): 5725MHz ~5850MHz/ 2 channel IEEE 802.11n/ac(80M): 5725MHz ~5850MHz/ 1 channel
Type of Modulation:	OFDM
Sample Type:	☒ Mobile ☐ Portable
Test Software of EUT:	DRTU
Antenna Type:	FPC antenna
Antenna gain:	ANT1:4.5dBi ANT2:5dBi ANT1+ANT2:7.6dBi
Cable loss:	1.0 dB

6.4 Description of Support Units

The EUT has been tested with associated equipment below.

Associated equipment name		Manufacture	model	serial number	Supplied by	Certification
AE1	Phone	Apple	A1367	TTF20120027	CTI	FCC
AE2	Router	HuaWei	WS550	K8E8W15314002784	CTI	FCC

6.5 est Location

All tests were performed at:

SHENZHEN HUAXIA TESTING TECHNOLOGY CO., LTD.,

SHENZHEN HUAXIA TESTING TECHNOLOGY CO., LTD 102A, 102B, Building 2, Shanghenglang New Industrial Zone, Shanghenglang Community, Dalang Street, Longhua District, Shenzhen, Guangdong, People’s Republic of China, 518000

6.6 Test Facility

- **A2LA (Certificate No. 4742.01)**

SHENZHEN HUAXIA TESTING TECHNOLOGY CO., LTD., Shenzhen EMC Laboratory is accredited by the
American Association for Laboratory Accreditation(A2LA). Certificate No. 4742.01.

- **FCC Registration No.: 522263**

SHENZHEN HUAXIA TESTING TECHNOLOGY CO., LTD., Shenzhen EMC Laboratory has been registered and fully described in a report filed with the (FCC) Federal Communications Commission. The acceptance letter from the FCC is maintained in our files. Registration No.:522263

6.7 Deviation from Standards

None.

6.8 Abnormalities from Standard Conditions

None.

6.9 Other Information Requested by the Customer

None.

6.10 Measurement Uncertainty (95% confidence levels, k=2)

No.	Item	Measurement Uncertainty
1	Radio Frequency	3×10^{-8}
2	RF power, conducted	0.86dB
3	Radiated Spurious emission test	5.12dB (Below 1GHz)
		4.6dB (Above 1GHz)
4	Conduction emission	3.5dB (9kHz to 150kHz)
		3.1dB (150kHz to 30MHz)
5	Temperature test	0.8°C

6	Humidity test	2.0%
7	DC power voltages	0.5%

7 Equipment List

Test Equipment	Manufacturer	Model No.	Instrument No.	Calibration Date	Calibration Due Date
EMI Test Receiver	R&S	ESR7	CQA-005	2025/9/1	2026/8/31
Spectrum analyzer	R&S	FSU26	CQA-038	2025/9/1	2026/8/31
Spectrum analyzer	R&S	FSV40	CQA-075	2025/9/1	2026/8/31
Preamplifier	MITEQ	AFS4-00010300-18-10P-4	4012339	2025/9/1	2026/8/31
Preamplifier	MITEQ	AMF-6D-02001800-29-20P	CQA-036	2025/9/1	2026/8/31
Preamplifier	EMCI	EMC184055SE	CQA-089	2025/9/1	2026/8/31
Loop antenna	Schwarzbeck	FMZB1516	CQA-060	2023/9/8	2026/9/7
Bilog Antenna	R&S	HL562	CQA-011	2023/11/01	2026/10/31
Horn Antenna	R&S	HF906	CQA-012	2023/11/01	2026/10/31
Horn Antenna	Schwarzbeck	BBHA 9170	CQA-088	2023/9/7	2026/9/6
Coaxial Cable (Above 1GHz)	CQA	N/A	C007	2025/9/1	2026/8/31
Coaxial Cable (Below 1GHz)	CQA	N/A	C013	2025/9/1	2026/8/31
Antenna Connector	CQA	RFC-01	CQA-080	2025/9/1	2026/8/31
Power Sensor	KEYSIGHT	U2021XA	CQA-30	2025/9/1	2026/8/31
N1918A Power Analysis Manager Power Panel	Agilent	N1918A	CQA-074	2025/9/1	2026/8/31
Power divider	MIDWEST	PWD-2533-02-SMA-79	CQA-067	2025/9/1	2026/8/31
EMI Test Receiver	R&S	ESR7	CQA-005	2025/9/1	2026/8/31
LISN	R&S	ENV216	CQA-003	2025/9/1	2026/8/31
Coaxial cable	CQA	N/A	CQA-C009	2025/9/1	2026/8/31
high-low temperature chamber	Auchno	OJN-9606	CQA-S003	2025/9/1	2026/8/31
DC power	KEYSIGHT	E3631A	CQA-028	2025/9/1	2026/8/31

8 Radio Technical Requirements Specification

Reference documents for testing:

No.	Identity	Document Title
1	FCC Part15E (2015)	Subpart C-Intentional Radiators
2	FCC Order, ET Docket No.03-122 (FCC 06-96)	Compliance Measurement Procedures for Unlicensed-National Information Infrastructure Devices Operating in the 5.25-5.35 GHz and 5.47-5.725 GHz Bands Incorporating Dynamic Frequency Selection

Test Results List:

FCC Part15E	Test method	Test item	Operation Mode verdict	Note
			Client without Radar Detection	
47 CFR Part 15 Subpart E Section 15.407 (h)(2)(iv)	FCC 06-96	Non-Occupancy Period	Not require	Appendix A)
47 CFR Part 15 Subpart E Section 15.407 (h)(2)	FCC 06-96	DFS Detection Threshold	Not require	Appendix B)
47 CFR Part 15 Subpart E Section 15.407 (h)(2)(ii)	FCC 06-96	Channel Availability Check Time	Not require	Appendix C)
47 CFR Part 15 Subpart E Section 15.407 (h)(2)	FCC 06-96	U-NII Detection Bandwidth	Not require	Appendix D)
47 CFR Part 15 Subpart E Section 15.407 (h)(2)(iii)	FCC 06-96	Channel Closing Transmission Time	PASS	Appendix E)
47 CFR Part 15 Subpart E Section 15.407 (h)(2)(iii)	FCC 06-96	Channel Move Time	PASS	Appendix F)
47 CFR Part 15 Subpart E Section 15.407 (h)(2)	FCC 06-96	Uniform Spreading	Not require	Appendix G)

Appendix A)Channel Closing Transmission and Channel Move Time

Channel Loading

TestMode	Frequency[MHz]	Result	Limit [%]	Verdict
11AC80MINO	5290	81.65	17	PASS
11AC80MINO	5530	80.19	17	PASS

11AC80MINO_5290

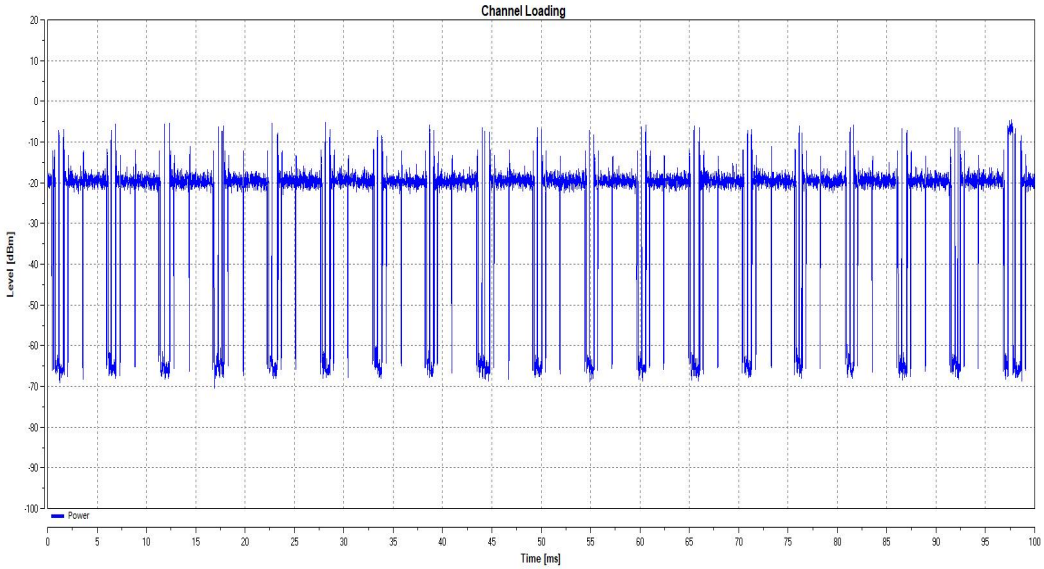

11AC80MINO_553

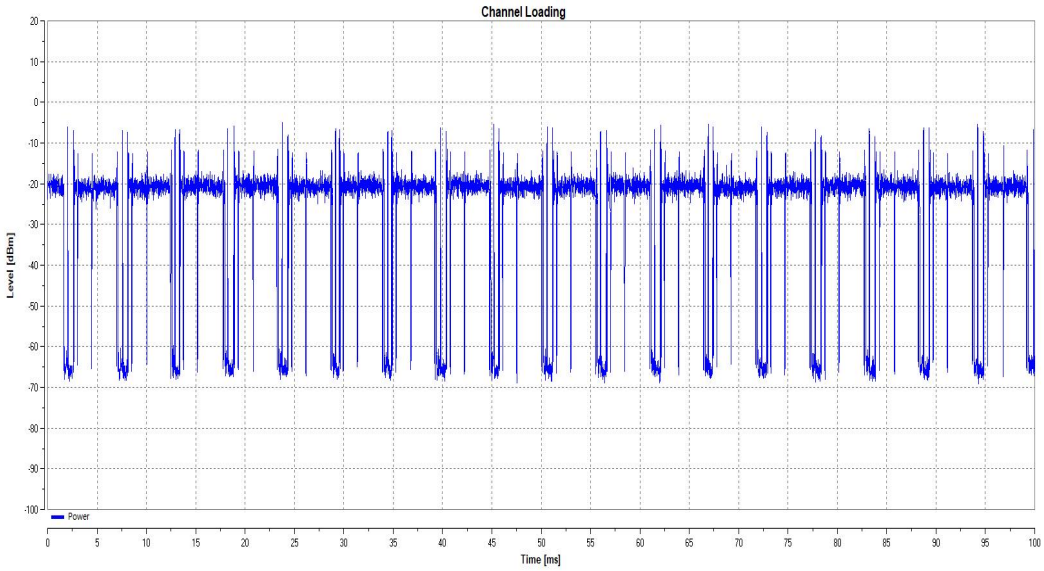

8.1 Monitoring of operating channel Limit

Monitoring of operating channel Limit	
Channel Move Time	10 sec
Channel Closing Transmission Time	260 ms

8.2 Test Result of Channel Closing Transmission and Channel Move Time

TestMode	Frequency[dbm]	Radar Type	Result	Limit[dbm]	Verdict
11AC80MINO	5290	Type0	-62.22	-62.00	Pass
11AC80MINO	5530	Type0	-62.22	-62.00	Pass

11AC80MINO_5290_Type0

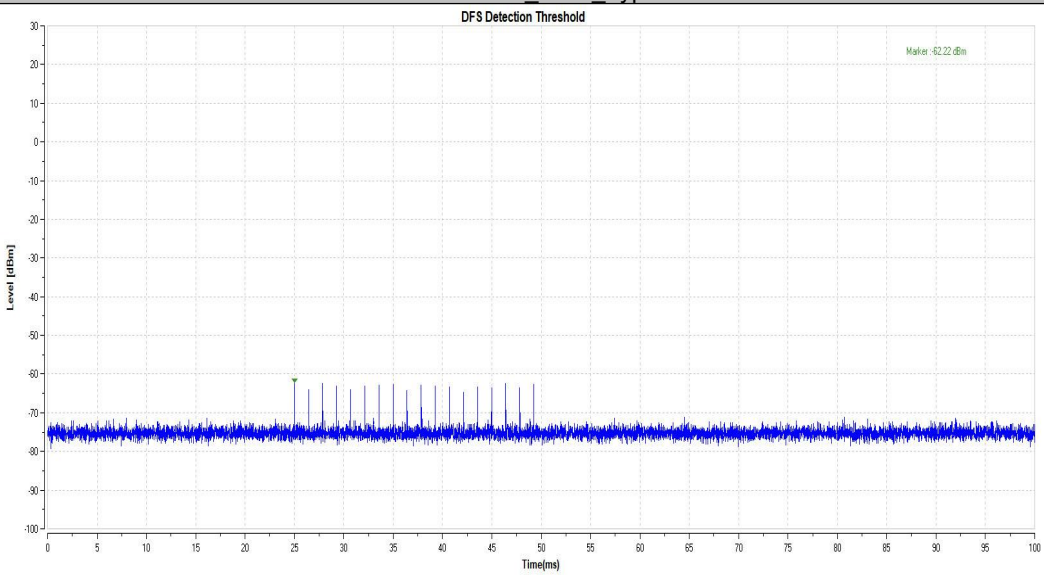

11AC80MINO_5530_Type0

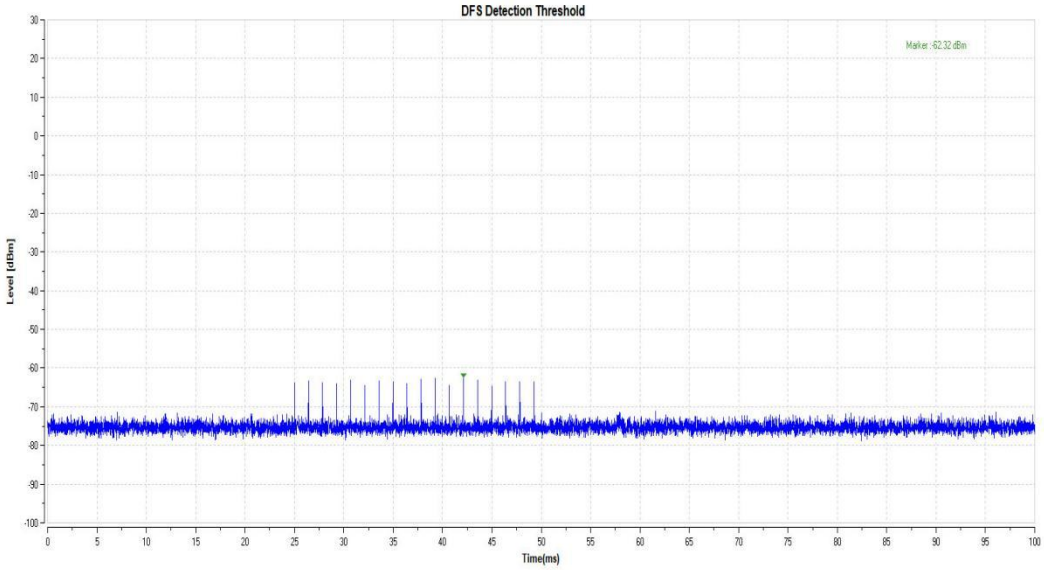
DFS Detection Threshold
Marker -62.32 dBm
Level [dBm]
Time(ms)

TestMode	Frequency[MHz]	CCTT[ms]	Limit[ms]	CMT[ms]	Limit[ms]	Verdict
11AC80MINO	5290	200+18.2	200+60	1215.5	10000	PASS
11AC80MINO	5530	200+28.6	200+60	2024.2	10000	PASS

11AC80MINO_5290

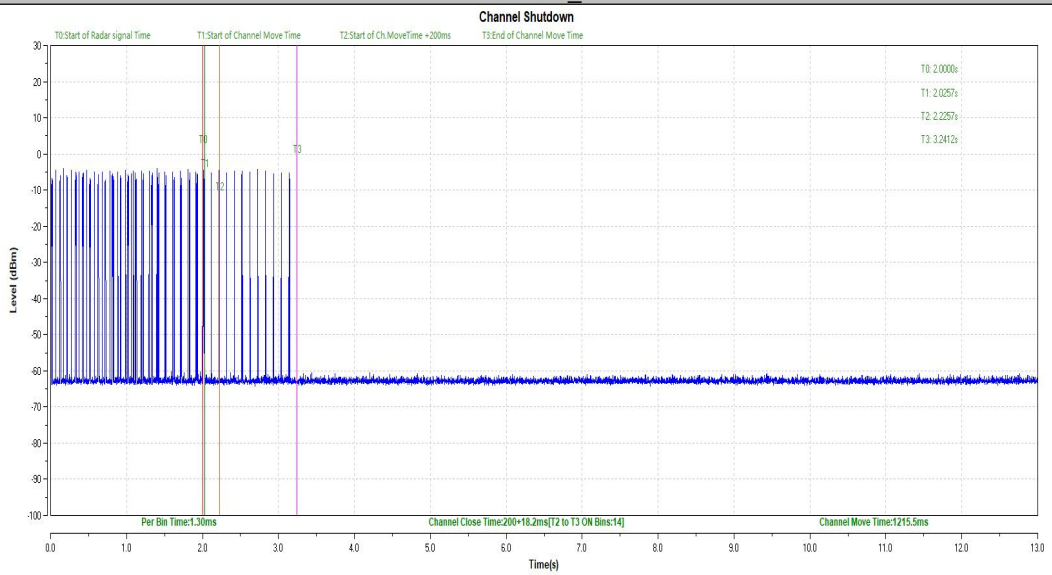

11AC80MINO_5530

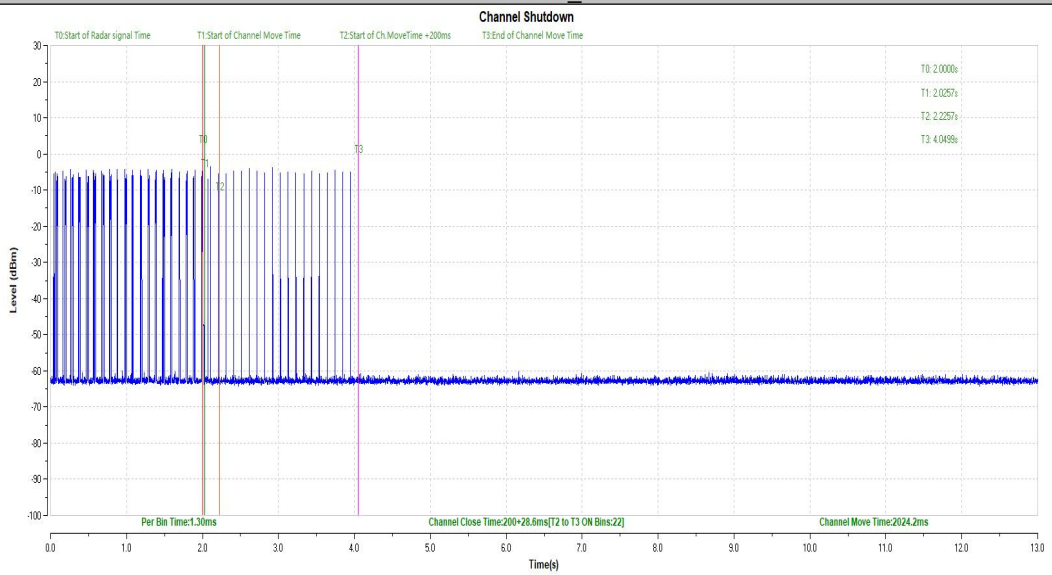

PHOTOGRAPHS OF EUT Constructional Details

Refer to Report No.CQASZ20260100282E-01 for EUT external and internal photos.

*** END OF REPORT ***