TEST REPORT

Product	:	e-Wagon
Trade mark	:	N/A
Model/Type reference	:	YW-2608-A, YW-2612-A
Serial Number	:	N/A
Report Number	:	EED32S809357
FCC ID	:	2BV3F-YW2608-A
Date of Issue	:	Jun. 04, 2026
Test Standards	:	47 CFR Part 15 Subpart C
Test result	:	PASS

Prepared for:

Shenzhen Yanwai Technology Co., Ltd.
Room 2907, Tower A, Zhongguan Times Square,
No. 4168 Liuxian Avenue, Nanshan District, Shenzhen

Prepared by:

Centre Testing International Group Co., Ltd.
Building C, Hongwei Industrial Park Block 70, Bao'an District,
Shenzhen, China
TEL: +86-755-3368 3668
FAX: +86-755-3368 3385

Compiled by:	Win Wei	Reviewed by:	Keven Tan
Approved by:	Aaron Ma	Date:	Jun. 04, 2026

Check No.:9250280426

1 Content

1 CONTENT 2

2 TEST SUMMARY 3

3 GENERAL INFORMATION 4

3.1 CLIENT INFORMATION 4
3.2 GENERAL DESCRIPTION OF EUT 4
3.3 TEST CONFIGURATION 5
3.4 TEST ENVIRONMENT 6
3.5 DESCRIPTION OF SUPPORT UNITS 6
3.6 TEST LOCATION 6
3.7 MEASUREMENT UNCERTAINTY (95% CONFIDENCE LEVELS, K=2) 7

4 EQUIPMENT LIST 8

5 TEST RESULTS AND MEASUREMENT DATA 12

5.1 ANTENNA REQUIREMENT 12
5.2 CONDUCTED EMISSIONS 13
5.3 MAXIMUM CONDUCTED OUTPUT POWER 17
5.4 DTS BANDWIDTH 18
5.5 MAXIMUM POWER SPECTRAL DENSITY 19
5.6 BAND EDGE MEASUREMENTS AND CONDUCTED SPURIOUS EMISSION 20
5.7 RADIATED SPURIOUS EMISSION & RESTRICTED BANDS 21

6 APPENDIX A 34

7 PHOTOGRAPHS 35

2 Test Summary

Test Item	Test Requirement	Result
Antenna Requirement	47 CFR Part 15 Subpart C Section 15.203/15.247 (c)	PASS
AC Power Line Conducted Emission	47 CFR Part 15 Subpart C Section 15.207	PASS
DTS Bandwidth	47 CFR Part 15 Subpart C Section 15.247 (a)(2)	PASS
Maximum Conducted Output Power	47 CFR Part 15 Subpart C Section 15.247 (b)(3)	PASS
Maximum Power Spectral Density	47 CFR Part 15 Subpart C Section 15.247 (e)	PASS
Band Edge Measurements	47 CFR Part 15 Subpart C Section 15.247(d)	PASS
Conducted Spurious Emissions	47 CFR Part 15 Subpart C Section 15.247(d)	PASS
Radiated Spurious Emission & Restricted bands	47 CFR Part 15 Subpart C Section 15.205/15.209	PASS

3 General Information

3.1 Client Information

Applicant:	Shenzhen Yanwai Technology Co., Ltd.
Address of Applicant:	Room 2907, Tower A, Zhongguan Times Square, No. 4168 Liuxian Avenue, Nanshan District, Shenzhen
Manufacturer:	Shenzhen Yanwai Technology Co., Ltd.
Address of Manufacturer:	Room 2907, Tower A, Zhongguan Times Square, No. 4168 Liuxian Avenue, Nanshan District, Shenzhen
Factory:	VTech Communications Ltd
Address of Factory:	Xia Ling Bei Management Zone,Liao Bu District,Guang Dong,CHINA

3.2 General Description of EUT

Product Name:	e-Wagon	
Model No.:	YW-2608-A, YW-2612-A	
Test Model No.:	YW-2608-A	
Model difference:	They have same electrical, PCB and layout, only the model name and structural strength and folding method, YW-2612-A andYW-2608-A are different for marketing requirements.	
Trade mark:	N/A	
Product Type:	☐ Mobile ☒ Portable ☐ Fix Location	
Operation Frequency:	2480MHz	
Modulation Type:	GFSK	
Number of Channel:	1	
Antenna Type:	PCB antenna	
Antenna Gain:	2.1dBi	
Power Supply:	Battery:	DC3.7V
Test Voltage:	DC3.7V	
Sample Received Date:	May 13, 2026	
Sample tested Date:	May 13, 2026 to May 23, 2026	
Note: The entire machine(Model: e-Wagon Lite) is composed of a control box(Model: YW-2608-B) and a handle(Model: YW-2608-A). The entire machine(Model: e-Wagon Pro) is composed of a control box(Model: YW-2612-B) and a handle(Model: YW-2612-A). This report is about the handle.		

Operation Frequency each of channel	
Channel	Frequency (MHz)
1	2480

3.3 Test Configuration

EUT Test Software Settings:			
Test Software:	N/A		
EUT Power Grade:	Default (Power level is built-in set parameters and cannot be changed and selected)		
Use test software to keep transmitting of the EUT.			
Test Mode	Modulation	Channel	Frequency(MHz)
Mode a	GFSK	CH1	2480

3.4 Test Environment

Operating Environment:	
Radiated Spurious Emissions:	
Temperature:	22~25.0 °C
Humidity:	50~55 % RH
Atmospheric Pressure:	1010mbar
Conducted Emissions:	
Temperature:	22~25.0 °C
Humidity:	50~55 % RH
Atmospheric Pressure:	1010mbar
RF Conducted:	
Temperature:	22~25.0 °C
Humidity:	50~55 % RH
Atmospheric Pressure:	1010mbar

3.5 Description of Support Units

The EUT has been tested independently.

3.6 Test Location

All tests were performed at:

Centre Testing International Group Co., Ltd
Building C, Hongwei Industrial Park Block 70, Bao'an District, Shenzhen, China
Telephone: +86 (0) 755 33683668 Fax:+86 (0) 755 33683385
No tests were sub-contracted.
FCC Designation No.: CN1164, Test Firm Registration No.: 260439

3.7 Measurement Uncertainty (95% confidence levels, k=2)

No.	Item	Measurement Uncertainty
1	Radio Frequency	7.9×10^{-8}
2	RF power, conducted	0.46dB (30MHz-1GHz)
		0.55dB (1GHz-40GHz)
3	Radiated Spurious emission test	3.3dB (9kHz-30MHz)
		4.3dB (30MHz-1GHz)
		4.5dB (1GHz-18GHz)
		3.4dB (18GHz-40GHz)
4	Conduction emission	3.5dB (9kHz-150kHz)
		3.1dB (150kHz-30MHz)
5	Temperature test	0.64°C
6	Humidity test	3.8%
7	DC power voltages	0.026%

4 Equipment List

RF test system					
Equipment	**Manufacturer**	**Mode No.**	**Serial Number**	**Cal. Date (mm-dd-yyyy)**	**Cal. Due date (mm-dd-yyyy)**
Communicatio n tset set	R&S	CMW500	107929	06-16-2025	06-15-2026
Signal Generator	R&S	SMBV100A	262454	08-11-2025	08-10-2026
Spectrum Analyzer	R&S	FSV40	101200	08-11-2025	08-10-2026
RF control unit(power unit)	MWRF-test	MW100-RFCB	MW220620CTI-42	06-16-2025	06-15-2026
high-low temperature test chamber	Dong Guang Qin Zhuo	LK-80GA	QZ20150611879	11-13-2025	11-12-2026
Temperature/ Humidity Indicator	biaozhi	HM10	1804186	05-26-2025	05-25-2026
BT&WI-FI Automatic test software	MWRF-test	MTS 8310	2.0.0.0	---	---
Digital multimeter	FLUKE	17B MAX	59545050WS	10-15-2025	10-14-2026

3M full-anechoic Chamber					
Equipment	**Manufacturer**	**Model No.**	**Serial Number**	**Cal. Date (mm-dd-yyyy)**	**Cal. Due date (mm-dd-yyyy)**
Fully Anechoic Chamber	TDK	FAC-3	---	01-29-2024	01-28-2027
Receiver	Keysight	N9038A	MY57290136	12-22-2025	12-21-2026
Spectrum Analyzer	Keysight	N9020B	MY57111112	12-21-2025	12-20-2026
Spectrum Analyzer	Keysight	N9030B	MY57140871	12-21-2025	12-20-2026
TRILOG Broadband Antenna	Schwarzbeck	VULB 9163	9163-1148	03-29-2026	03-28-2027
Horn Antenna	Schwarzbeck	BBHA 9170	9170-832	03-29-2026	03-28-2027
Horn Antenna	ETS-LINDGREN	3117	57407	06-29-2025	06-28-2026
Preamplifier	EMCI	EMC001330	980563	02-06-2026	02-05-2027
Preamplifier	EMCI	EMC051845SE	980380	11-25-2025	11-24-2026
Preamplifier	Tonscend	TAP-011858	AP21B806112	07-07-2025	07-06-2026
Communication test set	R&S	CMW500	104466	11-25-2025	11-24-2026
Temperature/ Humidity Indicator	biaozhi	GM1360	EE1186631	03-24-2026	03-23-2027
RSE Automatic test software	JS Tonscend	JS36-RSE	V5.0.0.1	---	---
Cable line	Times	SFT205-NMSM-2.50M	394812-0001	01-29-2024	01-28-2027
Cable line	Times	SFT205-NMSM-2.50M	394812-0002	01-29-2024	01-28-2027
Cable line	Times	SFT205-NMSM-2.50M	394812-0003	01-29-2024	01-28-2027
Cable line	Times	SFT205-NMSM-2.50M	393495-0001	01-29-2024	01-28-2027
Cable line	Times	EMC104-NMNM-1000	SN160710	01-29-2024	01-28-2027
Cable line	Times	SFT205-NMSM-3.00M	394813-0001	01-29-2024	01-28-2027
Cable line	Times	SFT205-NMNM-1.50M	381964-0001	01-29-2024	01-28-2027
Cable line	Times	SFT205-NMSM-7.00M	394815-0001	01-29-2024	01-28-2027
Cable line	Times	HF160-KMKM-3.00M	393493-0001	01-29-2024	01-28-2027

3M Semi-anechoic Chamber (2)- Radiated disturbance Test					
Equipment	Manufacturer	Model No.	Serial Number	Cal. date (mm-dd-yyyy)	Cal. Due date (mm-dd-yyyy)
3M Chamber & Accessory Equipment	TDK	SAC-3	---	01/13/2024	01/12/2027
Receiver	R&S	ESCI7	100938-003	09/03/2025	09/02/2026
TRILOG Broadband Antenna	schwarzbeck	VULB 9163	9163-618	05/11/2026	05/10/2027
Loop Antenna	Schwarzbeck	FMZB 1519B	1519B-076	03-29-2026	03-28-2027
Microwave Preamplifier	Tonscend	EMC051845SE	980380	11/25/2025	11/24/2026
Horn Antenna	A.H.SYSTEMS	SAS-574	374	07/02/2023	07/01/2026
Horn Antenna	ETS-LINGREN	BBHA 9120D	9120D-1869	03-31-2026	03-30-2027
Preamplifier	Agilent	11909A	12-1	02/06/2026	02/07/2027
Preamplifier	CD	PAP-1840-60	6041.6042	05/26/2025 05/16/2026	05/25/2026 05/15/2027
Test software	Fara	EZ-EMC	EMEC-3A1-Pre	---	---
Cable line	Fulai(7M)	SF106	5219/6A	01/13/2024	01/12/2027
Cable line	Fulai(6M)	SF106	5220/6A	01/13/2024	01/12/2027
Cable line	Fulai(3M)	SF106	5216/6A	01/13/2024	01/12/2027
Cable line	Fulai(3M)	SF106	5217/6A	01/13/2024	01/12/2027

Conducted disturbance Test					
Equipment	Manufacturer	Model No.	Serial Number	Cal. date (mm-dd-yyyy)	Cal. Due date (mm-dd-yyyy)
Receiver	R&S	ESCI	100435	04-06-2026	04-05-2027
Temperature/ Humidity Indicator	Defu	TH128	/	03-24-2026	03-23-2027
LISN	R&S	ENV216	100098	09-13-2025	09-12-2026
Barometer	changchun	DYM3	1188	---	---
Test software	Fara	EZ-EMC	EMC-CON 3A1.1	---	---
Capacitive voltage probe	Schwarzbeck	CVP 9222C	00124	06-07-2025	06-06-2026
ISN	TESEQ	ISN T800	30297	11-24-2025	11-23-2026

5 Test results and Measurement Data

5.1 Antenna Requirement

Standard requirement:	47 CFR Part 15C Section 15.203 /247(c)
15.203 requirement: An intentional radiator shall be designed to ensure that no antenna other than that furnished by the responsible party shall be used with the device. The use of a permanently attached antenna or of an antenna that uses a unique coupling to the intentional radiator, the manufacturer may design the unit so that a broken antenna can be replaced by the user, but the use of a standard antenna jack or electrical connector is prohibited. 15.247(b) (4) requirement: The conducted output power limit specified in paragraph (b) of this section is based on the use of antennas with directional gains that do not exceed 6 dBi. Except as shown in paragraph (c) of this section, if transmitting antennas of directional gain greater than 6 dBi are used, the conducted output power from the intentional radiator shall be reduced below the stated values in paragraphs (b)(1), (b)(2), and (b)(3) of this section, as appropriate, by the amount in dB that the directional gain of the antenna exceeds 6 dBi.	
EUT Antenna:	Please see Internal photos
The antenna is PCB antenna. The best case gain of the antenna is 2.1dBi.	

5.2 Conducted Emissions

Test Requirement:	47 CFR Part 15C Section 15.207
Test Method:	ANSI C63.10-2020
Test Frequency Range:	150kHz to 30MHz
Receiver setup:	RBW=9 kHz, VBW=30 kHz, Sweep time=auto
Limit:	

Frequency range (MHz)	Limit (dBuV)	
	Quasi-peak	Average
0.15-0.5	66 to 56*	56 to 46*
0.5-5	56	46
5-30	60	50

* Decreases with the logarithm of the frequency.

Test Setup:

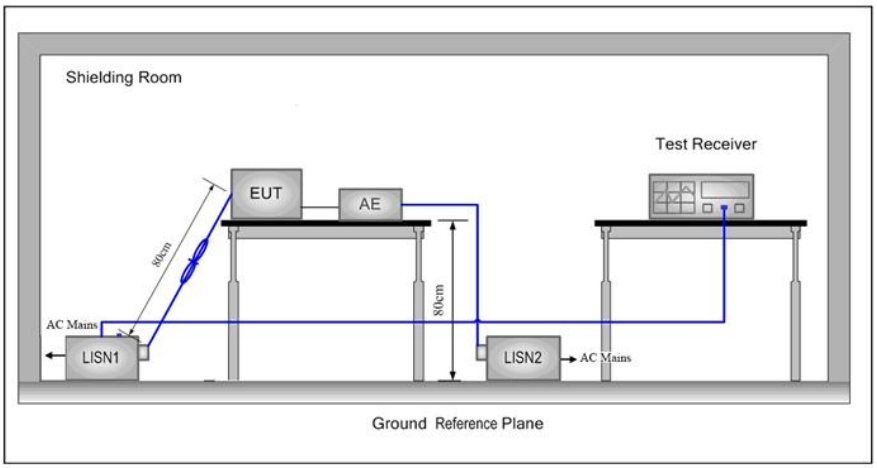

Test Procedure:

1) The mains terminal disturbance voltage test was conducted in a shielded room.
2) The EUT was connected to AC power source through a LISN 1 (Line Impedance Stabilization Network) which provides a 50Ω/50μH + 5Ω linear impedance. The power cables of all other units of the EUT were connected to a second LISN 2, which was bonded to the ground reference plane in the same way as the LISN 1 for the unit being measured. A multiple socket outlet strip was used to connect multiple power cables to a single LISN provided the rating of the LISN was not exceeded.
3) The tabletop EUT was placed upon a non-metallic table 0.8m above the ground reference plane. And for floor-standing arrangement, the EUT was placed on the horizontal ground reference plane.
4) The test was performed with a vertical ground reference plane. The rear of the EUT shall be 0.4 m from the vertical ground reference plane. The vertical ground reference plane was bonded to the horizontal ground reference plane. The LISN 1 was placed 0.8 m from the boundary of the unit under test and bonded to a ground reference plane for LISNs mounted on top of the ground reference plane. This distance was between the closest points of the LISN 1 and the EUT. All other units of the EUT and associated equipment was at least 0.8 m from the LISN 2.
5) In order to find the maximum emission, the relative positions of equipment and all of the interface cables must be changed according to ANSI C63.10-2020 on conducted measurement.

Test Mode: All modes were tested, only the worst case mode a was recorded in the report.

Test Results:	Pass

Measurement Data

Live line:

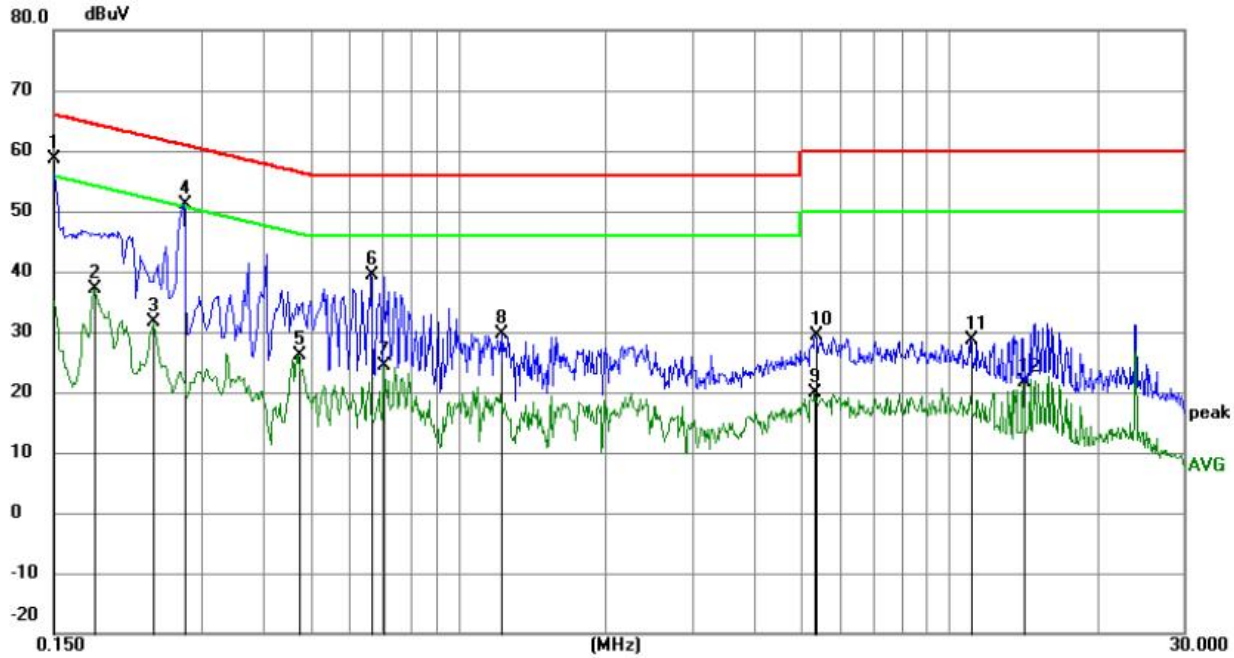

No.	Mk.	Freq.	Reading Level	Correct Factor	Measure-ment	Limit	Margin		
		MHz	dBuV	dB	dBuV	dBuV	dB	Detector	Comment
1	*	0.1500	48.34	10.28	58.62	66.00	-7.38	QP	
2		0.1815	26.96	10.24	37.20	54.42	-17.22	AVG	
3		0.2400	21.47	10.18	31.65	52.10	-20.45	AVG	
4		0.2760	41.03	10.15	51.18	60.94	-9.76	QP	
5		0.4740	16.14	10.08	26.22	46.44	-20.22	AVG	
6		0.6675	29.21	10.12	39.33	56.00	-16.67	QP	
7		0.7080	14.19	10.13	24.32	46.00	-21.68	AVG	
8		1.2255	19.56	10.18	29.74	56.00	-26.26	QP	
9		5.3070	9.70	10.06	19.76	50.00	-30.24	AVG	
10		5.3430	19.33	10.05	29.38	60.00	-30.62	QP	
11		11.0355	18.77	9.93	28.70	60.00	-31.30	QP	
12		14.1540	11.76	9.88	21.64	50.00	-28.36	AVG	

Remark:

1. The following Quasi-Peak and Average measurements were performed on the EUT:
2. Final Test Level =Receiver Reading + LISN Factor + Cable Loss.

3. Margin=Measurement-Limit.
4. Measurement=Reading Level+Correct Factor.
5. In the test results, an asterisk (*) indicates Maximum Data, a cross (X) indicates over Limit.
6. If the Peak value under Average limit, the Average value is not recorded in the report.

Neutral line:

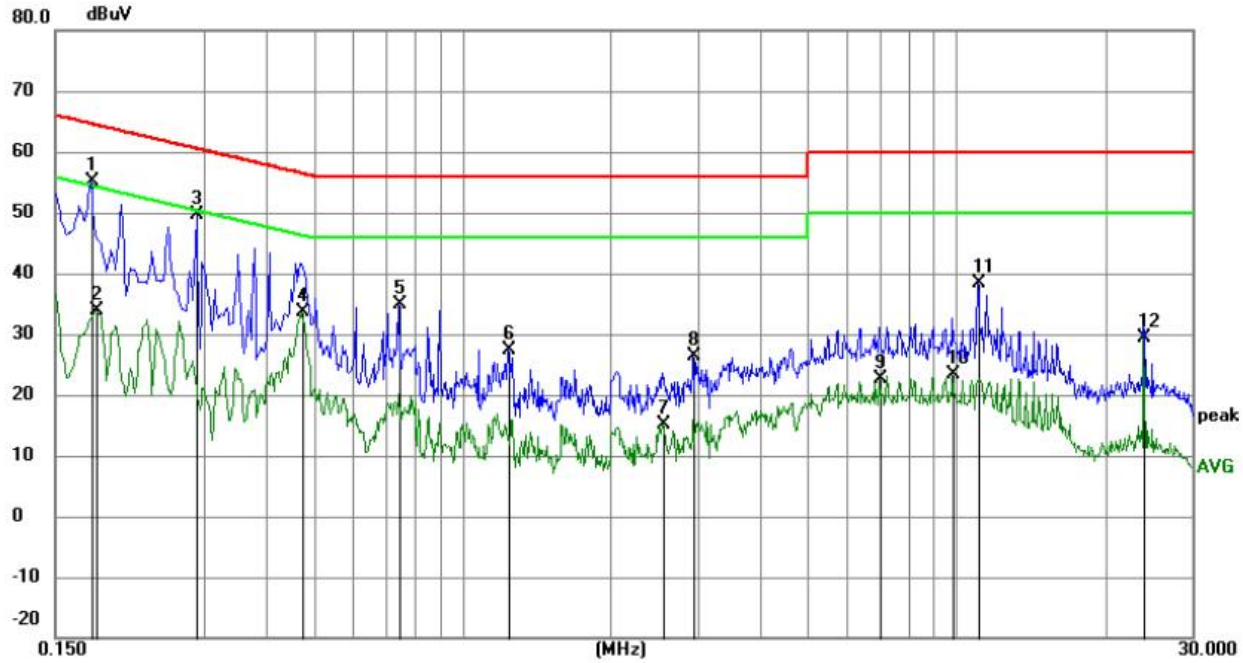

No.	Mk.	Freq.	Reading Level	Correct Factor	Measure-ment	Limit	Margin		
		MHz	dBuV	dB	dBuV	dBuV	dB	Detector	Comment
1	*	0.1770	44.91	10.24	55.15	64.63	-9.48	QP	
2		0.1815	23.52	10.24	33.76	54.42	-20.66	AVG	
3		0.2895	39.57	10.14	49.71	60.54	-10.83	QP	
4		0.4740	23.57	10.08	33.65	46.44	-12.79	AVG	
5		0.7440	24.74	10.15	34.89	56.00	-21.11	QP	
6		1.2390	17.32	10.18	27.50	56.00	-28.50	QP	
7		2.5485	5.04	10.15	15.19	46.00	-30.81	AVG	
8		2.9355	16.16	10.14	26.30	56.00	-29.70	QP	
9		6.9900	12.65	10.03	22.68	50.00	-27.32	AVG	
10		9.8565	13.42	9.95	23.37	50.00	-26.63	AVG	
11		11.0625	28.44	9.93	38.37	60.00	-21.63	QP	
12		24.0045	19.62	9.81	29.43	50.00	-20.57	AVG	

Remark:

1. The following Quasi-Peak and Average measurements were performed on the EUT:
2. Final Test Level =Receiver Reading + LISN Factor + Cable Loss.
3. Margin=Measurement-Limit.
4. Measurement=Reading Level+Correct Factor.
5. In the test results, an asterisk (*) indicates Maximum Data, a cross (X) indicates over Limit.
6. If the Peak value under Average limit, the Average value is not recorded in the report.

5.3 Maximum Conducted Output Power

Test Requirement:	47 CFR Part 15C Section 15.247 (b)(3)
Test Method:	ANSI C63.10-2020
Test Setup:	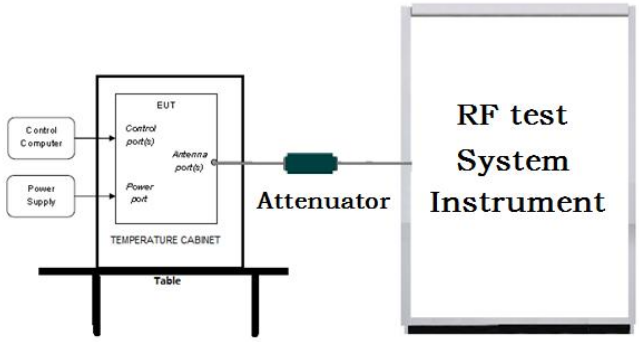 Remark: Offset=Cable loss+ attenuation factor.
Test Procedure:	a) Set the RBW ⩾ DTS bandwidth. b) Set VBW ⩾ 3 × RBW. c) Set span ⩾ 3 x RBW d) Sweep time = auto couple. e) Detector = peak. f) Trace mode = max hold. g) Allow trace to fully stabilize. h) Use peak marker function to determine the peak amplitude level.
Limit:	30dBm
Test Mode:	Refer to clause 3.3
Test Results:	Refer to Appendix A

5.4 DTS Bandwidth

Test Requirement:	47 CFR Part 15C Section 15.247 (a)(2)
Test Method:	ANSI C63.10-2020
Test Setup:	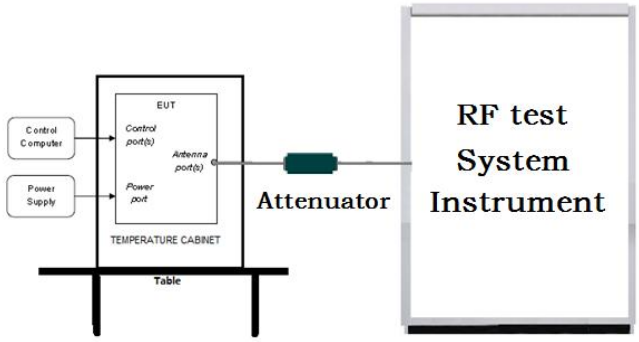 Remark: Offset=Cable loss+ attenuation factor.
Test Procedure:	a) Set RBW = 100 kHz. b) Set the VBW ⩾[3 × RBW]. c) Detector = peak. d) Trace mode = max hold. e) Sweep = auto couple. f) Allow the trace to stabilize. g) Measure the maximum width of the emission that is constrained by the frequencies associated with the two outermost amplitude points (upper and lower frequencies) that are attenuated by 6 dB relative to the maximum level measured in the fundamental emission.
Limit:	≥ 500 kHz
Test Mode:	Refer to clause 3.3
Test Results:	Refer to Appendix A

5.5 Maximum Power Spectral Density

Test Requirement:	47 CFR Part 15C Section 15.247 (e)
Test Method:	ANSI C63.10-2020
Test Setup:	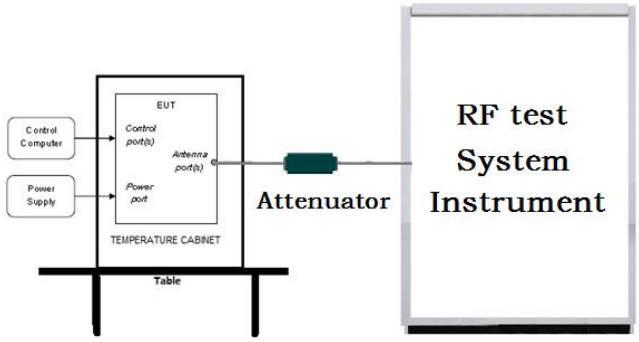 Remark: Offset=Cable loss+ attenuation factor.
Test Procedure:	a) Set analyzer center frequency to DTS channel center frequency. b) Set the span to 1.5 times the DTS bandwidth. c) Set the RBW to 3 kHz ⩽ RBW ⩽ 100 kHz. d) Set the VBW ⩾ [3 × RBW]. e) Detector = peak. f) Sweep time = auto couple. g) Trace mode = max hold. h) Allow trace to fully stabilize. i) Use the peak marker function to determine the maximum amplitude level within the RBW. j) If measured value exceeds requirement, then reduce RBW (but no less than 3 kHz) and repeat.
Limit:	≤8.00dBm/3kHz
Test Mode:	Refer to clause 3.3
Test Results:	Refer to Appendix A

5.6 Band Edge measurements and Conducted Spurious Emission

Test Requirement:	47 CFR Part 15C Section 15.247 (d)
Test Method:	ANSI C63.10-2020
Test Setup:	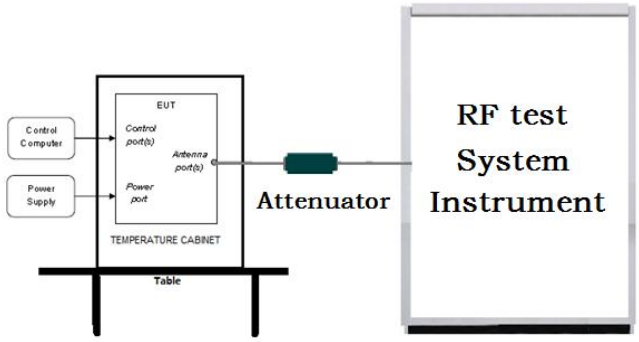 Remark: Offset=Cable loss+ attenuation factor.
Test Procedure:	a) Set RBW =100KHz. b) Set VBW = 300KHz. c) Sweep time = auto couple. d) Detector = peak. e) Trace mode = max hold. f) Allow trace to fully stabilize. g) Use peak marker function to determine the peak amplitude level.
Limit:	In any 100 kHz bandwidth outside the frequency band in which the spread spectrum intentional radiator is operating, the radio frequency power that is produced by the intentional radiator shall be at least 20 dB below that in the 100 kHz bandwidth within the band that contains the highest level of the desired power, based on either an RF conducted or a radiated measurement.
Test Mode:	Refer to clause 3.3
Test Results:	Refer to Appendix A

5.7 Radiated Spurious Emission & Restricted bands

Test Requirement:	47 CFR Part 15C Section 15.209 and 15.205
Test Method:	ANSI C63.10-2020
Test Site:	Measurement Distance: 3m (Semi-Anechoic Chamber)
Receiver Setup:	

Frequency	Detector	RBW	VBW	Remark
0.009MHz-0.090MHz	Peak	10kHz	30kHz	Peak
0.009MHz-0.090MHz	Average	10kHz	30kHz	Average
0.090MHz-0.110MHz	Quasi-peak	10kHz	30kHz	Quasi-peak
0.110MHz-0.490MHz	Peak	10kHz	30kHz	Peak
0.110MHz-0.490MHz	Average	10kHz	30kHz	Average
0.490MHz -30MHz	Quasi-peak	10kHz	30kHz	Quasi-peak
30MHz-1GHz	Quasi-peak	100 kHz	300kHz	Quasi-peak
Above 1GHz	Peak	1MHz	3MHz	Peak
	Peak	1MHz	10kHz	Average

Limit:

Frequency	Field strength (microvolt/meter)	Limit (dBuV/m)	Remark	Measurement distance (m)
0.009MHz-0.490MHz	2400/F(kHz)	-	-	300
0.490MHz-1.705MHz	24000/F(kHz)	-	-	30
1.705MHz-30MHz	30	-	-	30
30MHz-88MHz	100	40.0	Quasi-peak	3
88MHz-216MHz	150	43.5	Quasi-peak	3
216MHz-960MHz	200	46.0	Quasi-peak	3
960MHz-1GHz	500	54.0	Quasi-peak	3
Above 1GHz	500	54.0	Average	3

Note: 15.35(b), Unless otherwise specified, the limit on peak radio frequency emissions is 20dB above the maximum permitted average emission limit applicable to the equipment under test. This peak limit applies to the total peak emission level radiated by the device.

Test Setup:	

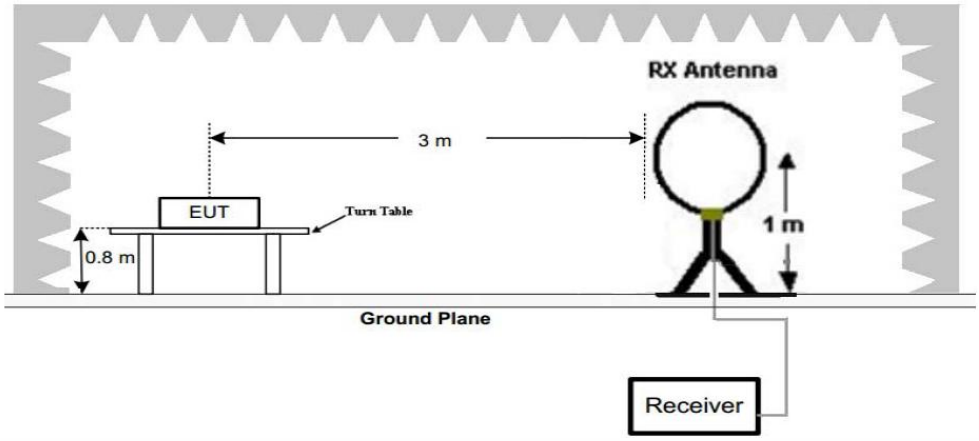

Figure 1. Below 30MHz

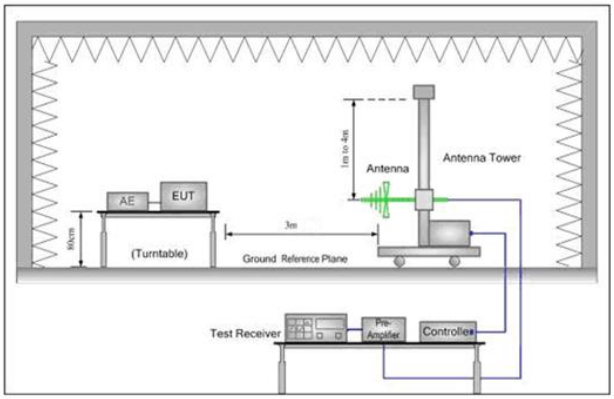

Figure 2. 30MHz to 1GHz

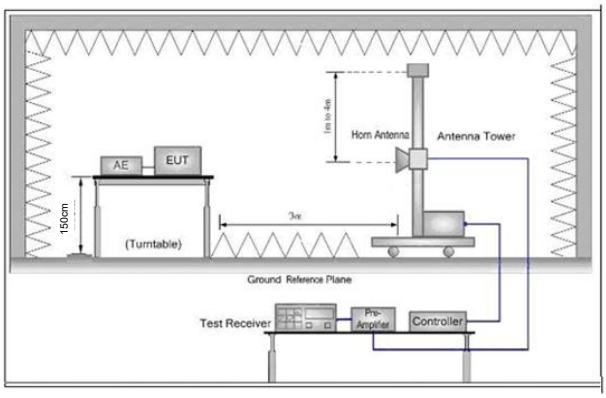

Figure 3. Above 1 GHz

Test Procedure:	a. 1) Below 1G: The EUT was placed on the top of a rotating table 0.8 meters above the ground at a 3 meter semi-anechoic camber. The table was rotated 360 degrees to determine the position of the highest radiation. 2) Above 1G: The EUT was placed on the top of a rotating table 1.5 meters above the ground at a 3 meter semi-anechoic camber. The table was rotated 360 degrees to determine the position of the highest radiation. Note: For the radiated emission test above 1GHz: Place the measurement antenna away from each area of the EUT determined to be a source of emissions at the specified measurement distance, while keeping the measurement antenna aimed at the source of emissions at each frequency of significant emissions, with polarization oriented for maximum response. The measurement antenna may have to be higher or lower than the EUT, depending on the radiation pattern of the emission and staying aimed at the emission source for receiving the maximum signal. The final measurement antenna elevation shall be that which maximizes the emissions. The measurement antenna elevation for maximum emissions shall be restricted to a range of heights of from 1 m to 4 m above the ground or reference ground plane. b. The EUT was set 3 meters away from the interference-receiving antenna, which was mounted on the top of a variable-height antenna tower. c. The antenna height is varied from one meter to four meters above the ground to determine the maximum value of the field strength. Both

	horizontal and vertical polarizations of the antenna are set to make the measurement. d. For each suspected emission, the EUT was arranged to its worst case and then the antenna was tuned to heights from 1 meter to 4 meters (for the test frequency of below 30MHz, the antenna was tuned to heights 1 meter) and the rotatable table was turned from 0 degrees to 360 degrees to find the maximum reading. e. The test-receiver system was set to Peak Detect Function and Specified Bandwidth with Maximum Hold Mode. f. If the emission level of the EUT in peak mode was 10dB lower than the limit specified, then testing could be stopped and the peak values of the EUT would be reported. Otherwise the emissions that did not have 10dB margin would be re-tested one by one using peak, quasi-peak or average method as specified and then reported in a data sheet. g. Test the EUT in the lowest channel (2402MHz),the middle channel (2440MHz),the Highest channel (2480MHz) h. The radiation measurements are performed in X, Y, Z axis positioning for Transmitting mode, and found the X axis positioning which it is the worst case. i. Repeat above procedures until all frequencies measured was complete.
Test Mode:	Refer to clause 3.3
Test Results:	Pass

Radiated Spurious Emission below 1GHz:

Test Graph

Horizontal:

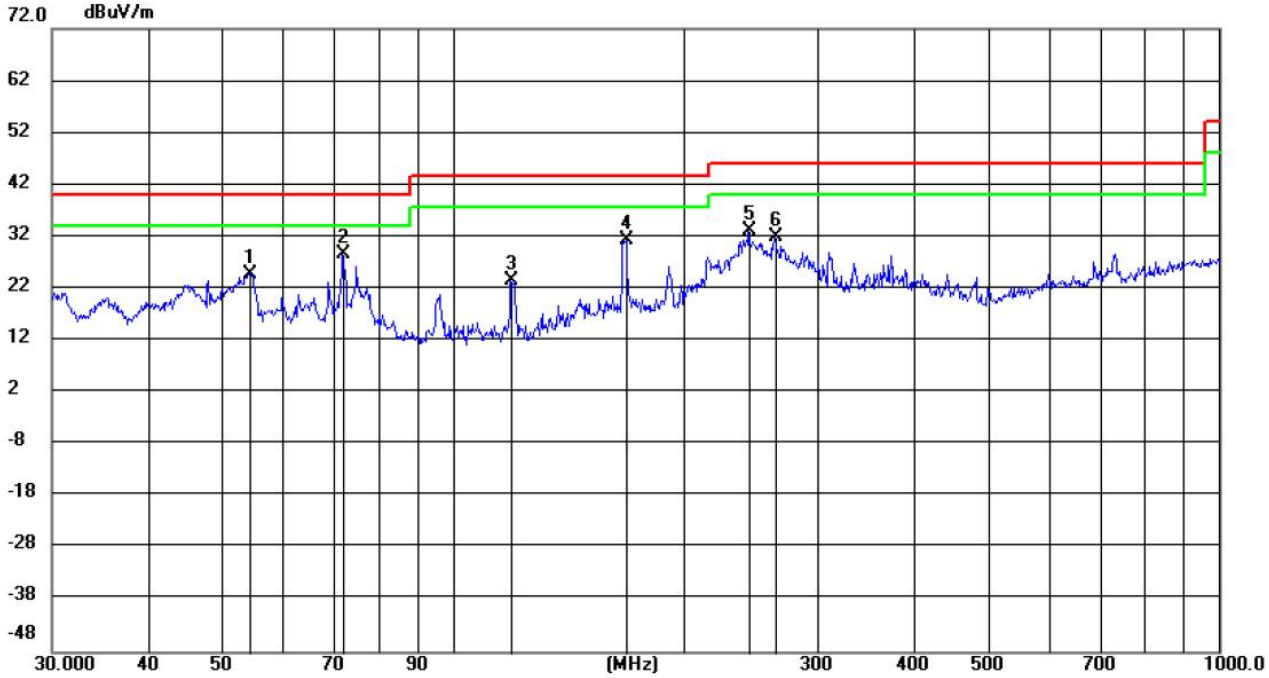

No.	Mk.	Freq.	Reading Level	Correct Factor	Measure-ment	Limit	Margin		Antenna Height	Table Degree	
		MHz	dBuV	dB/m	dBuV/m	dBuV/m	dB	Detector	cm	degree	Comment
1		54.3085	10.57	14.16	24.73	40.00	-15.27	QP	100	72	
2	*	72.0085	17.86	10.77	28.63	40.00	-11.37	QP	100	18	
3		119.1641	11.85	11.74	23.59	43.50	-19.91	QP	100	190	
4		168.4728	20.38	10.98	31.36	43.50	-12.14	QP	100	18	
5		243.8470	18.77	14.28	33.05	46.00	-12.95	QP	100	136	
6		263.2645	16.84	15.11	31.95	46.00	-14.05	QP	100	190	

Remark:

1. Margin=Measurement(Level)-Limit.
2. Measurement(Level)=Reading Level+Correct Factor.
3. In the test results, an asterisk (*) indicates Maximum Data, a cross (X) indicates over Limit, an exclamation mark (!) indicates over -6dB margin Limit.

Vertical:

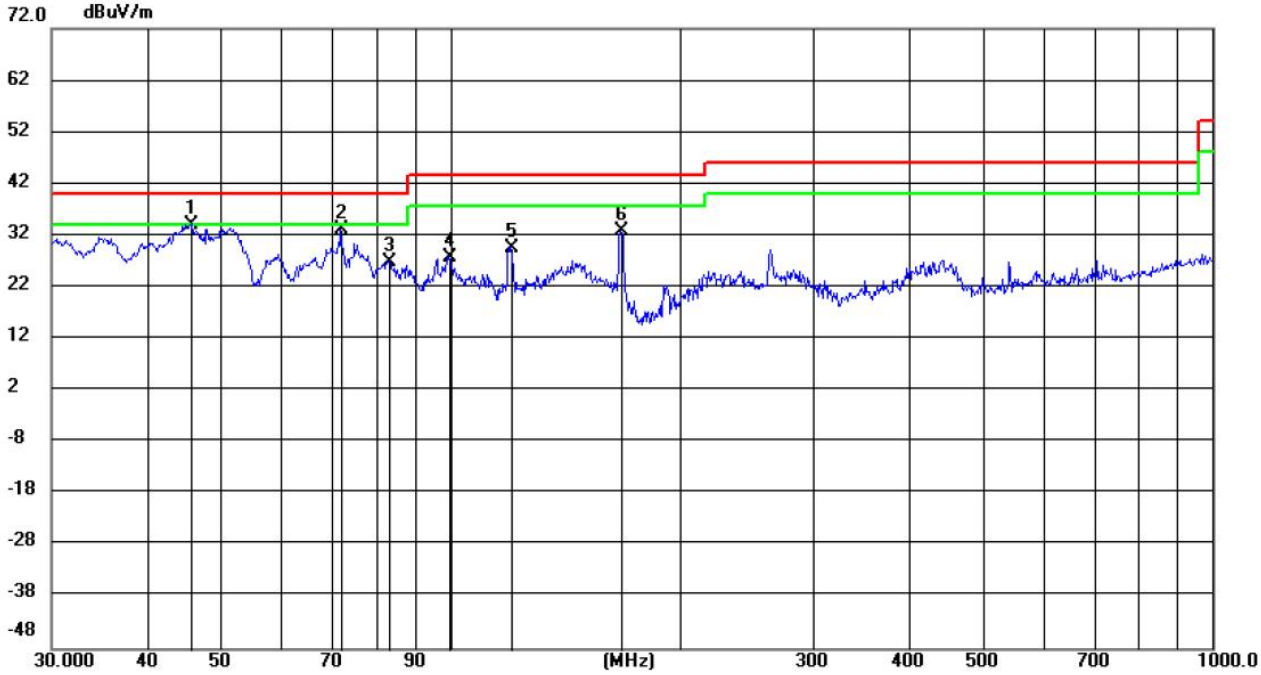

No.	Mk.	Freq.	Reading Level	Correct Factor	Measure-ment	Limit	Margin		Antenna Height	Table Degree	
		MHz	dBuV	dB/m	dBuV/m	dBuV/m	dB	Detector	cm	degree	Comment
1	*	45.7108	20.17	14.03	34.20	40.00	-5.80	QP	100	105	
2		71.9707	22.49	10.77	33.26	40.00	-6.74	QP	100	288	
3		83.2298	16.65	10.31	26.96	40.00	-13.04	QP	100	96	
4		99.5630	14.52	13.35	27.87	43.50	-15.63	QP	100	78	
5		120.0238	18.18	11.52	29.70	43.50	-13.80	QP	100	133	
6		167.2368	21.81	10.92	32.73	43.50	-10.77	QP	100	233	

Remark:

1. Margin=Measurement(Level)-Limit.
2. Measurement(Level)=Reading Level+Correct Factor.
3. In the test results, an asterisk (*) indicates Maximum Data, a cross (X) indicates over Limit, an exclamation mark (!) indicates over -6dB margin Limit.

Radiated Spurious Emission above 1GHz:

Test_Mode	BLE 1M GFSK Transmitting	Test_Frequency	2480MHz
Remark:	/	Test_Date	2026/5/19

Test Graph

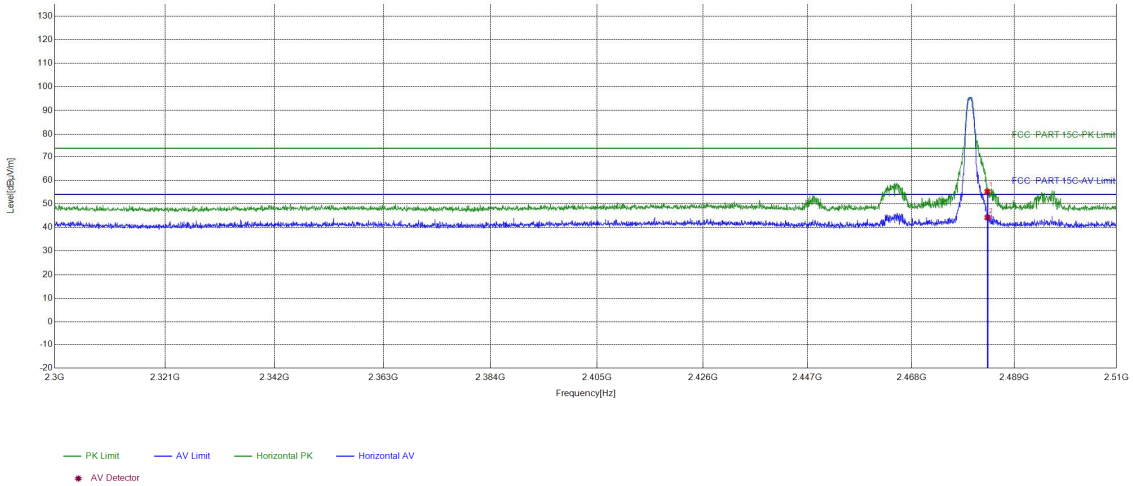

Suspected List									
NO	Freq. [MHz]	Factor [dB]	Reading [dBμV]	Level [dBμV/m]	Limit [dBμV/m]	Margin [dB]	Result	Polarity	Remark
1	2483.5	16.29	38.88	55.17	74.00	18.83	PASS	Horizont	PK
2	2483.5	16.29	27.93	44.22	54.00	9.78	PASS	Horizont	AV

Test_Mode	BLE 1M GFSK Transmitting	Test_Frequency	2480MHz
Remark:	/	Test_Date	2026/5/19

Test Graph

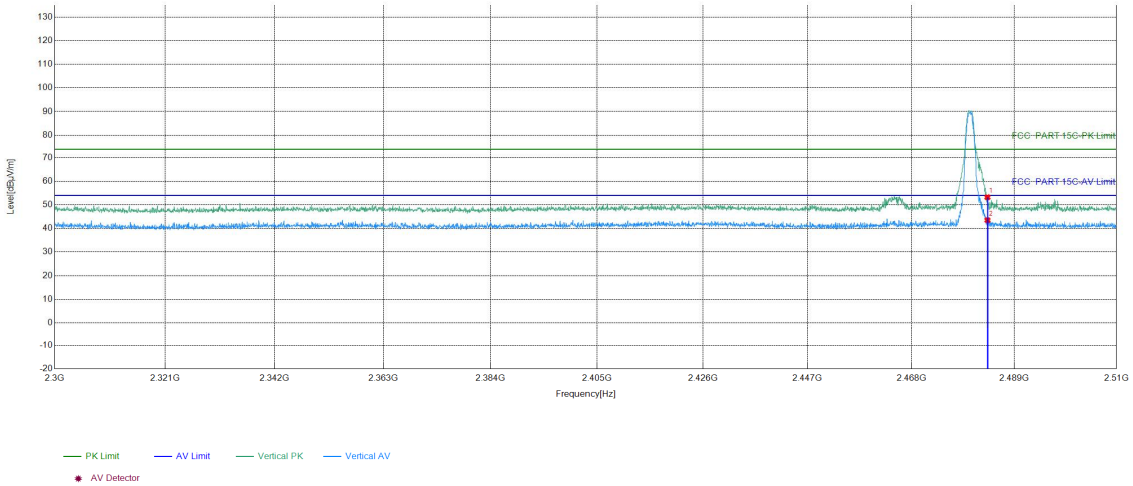

Suspected List									
NO	Freq. [MHz]	Factor [dB]	Reading [dBμV]	Level [dBμV/m]	Limit [dBμV/m]	Margin [dB]	Result	Polarity	Remark
1	2483.5	16.29	36.95	53.24	74.00	20.76	PASS	Vertical	PK
2	2483.5	16.29	27.21	43.50	54.00	10.50	PASS	Vertical	AV

Test_Mode	BLE 1M GFSK Transmitting	Test_Frequency	2480MHz
Remark:	/	Test_Date	2026/5/19

Test Graph

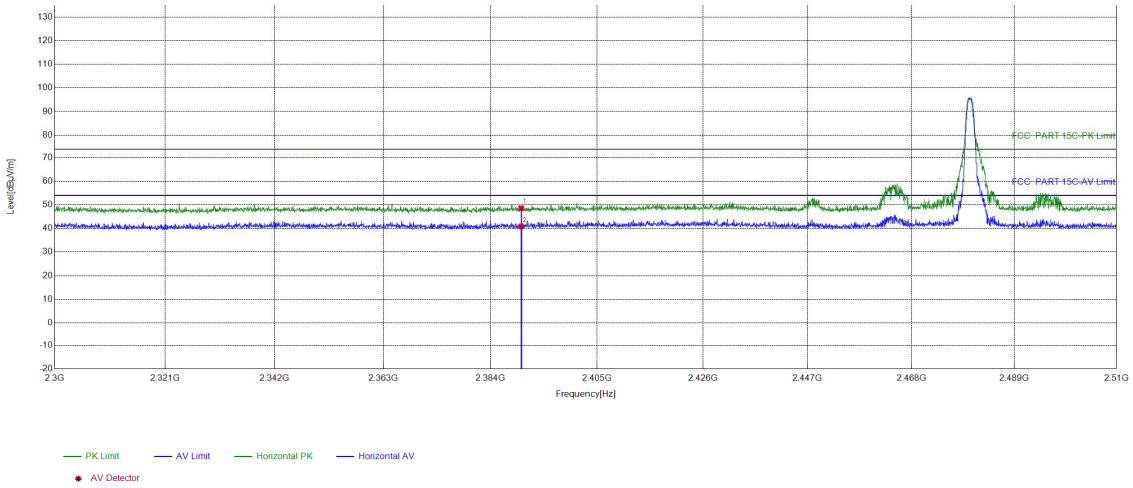

Suspected List									
NO	Freq. [MHz]	Factor [dB]	Reading [dBμV]	Level [dBμV/m]	Limit [dBμV/m]	Margin [dB]	Result	Polarity	Remark
1	2390	15.96	32.65	48.61	74.00	25.39	PASS	Horizont	PK
2	2390	15.96	24.89	40.85	54.00	13.15	PASS	Horizont	AV

Test_Mode	BLE 1M GFSK Transmitting	Test_Frequency	2480MHz
Remark:	/	Test_Date	2026/5/19

Test Graph

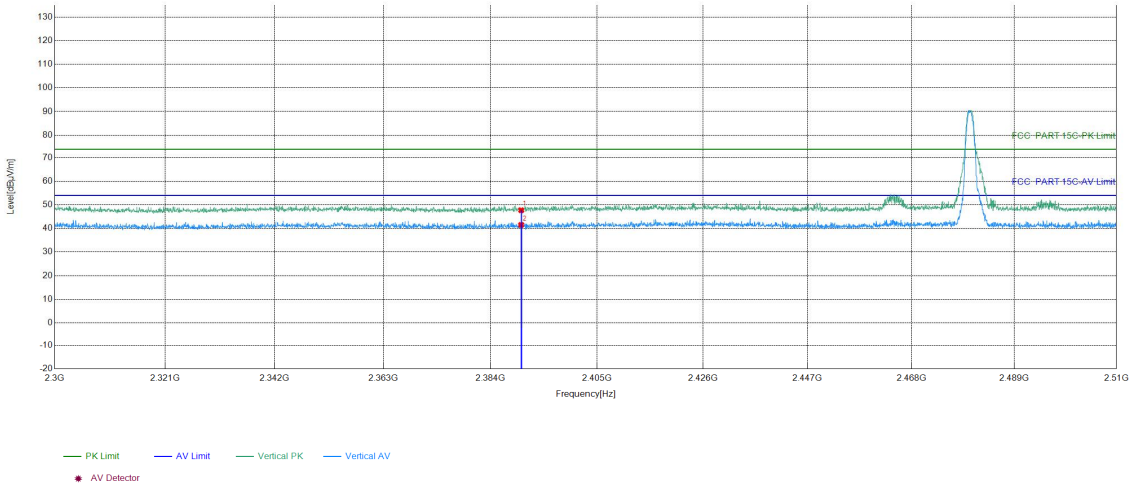

Suspected List									
NO	Freq. [MHz]	Factor [dB]	Reading [dBμV]	Level [dBμV/m]	Limit [dBμV/m]	Margin [dB]	Result	Polarity	Remark
1	2390	15.96	31.76	47.72	74.00	26.28	PASS	Vertical	PK
2	2390	15.96	25.54	41.50	54.00	12.50	PASS	Vertical	AV

Remark:

1) The field strength is calculated by adding the Antenna Factor, Cable Factor & Preamplifier. The basic equation with a sample calculation is as follows:
   Final Test Level =Receiver Reading + Antenna Factor + Cable Factor – Preamplifier Factor
2) Scan from 9kHz to 25GHz, the disturbance above 10GHz and below 30MHz was very low. As shown in this section, for frequencies above 1GHz, the field strength limits are based on average limits. However, the peak field strength of any emission shall not exceed the maximum permitted average limits specified above by more than 20 dB under any condition of modulation.The report records the lowest Peak value. If the Peak value is greater than 54dBμV/m, then the Average value at that time is recorded.

Restricted bands:

Test plot as follows:

Test_Mode	BLE 1M GFSK Transmitting	Test_Frequency	2480MHz
Remark:	/	Test_Date	2026/5/19

Test Graph

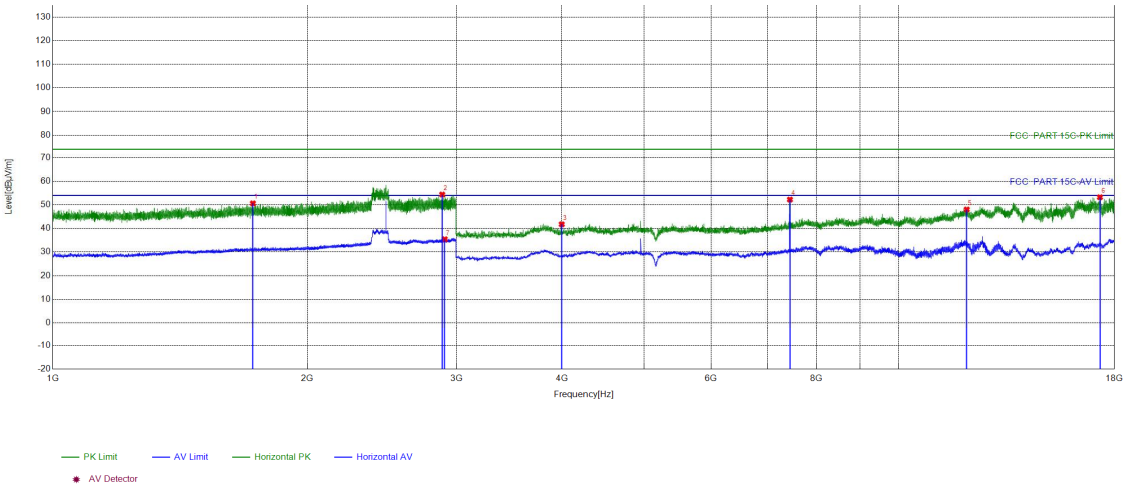

Suspected List									
NO	Freq. [MHz]	Factor [dB]	Reading [dBμV]	Level [dBμV/m]	Limit [dBμV/m]	Margin [dB]	Result	Polarity	Remark
1	1724.1816	14.20	36.44	50.64	74.00	23.36	PASS	Horizont	PK
2	2886.7925	17.54	36.85	54.39	74.00	19.61	PASS	Horizont	PK
3	3997.0665	-11.70	53.46	41.76	74.00	32.24	PASS	Horizont	PK
4	7440.296	-2.50	54.75	52.25	74.00	21.75	PASS	Horizont	PK
5	12039.6026	2.94	45.10	48.04	74.00	25.96	PASS	Horizont	PK
6	17304.9537	14.14	39.10	53.24	74.00	20.76	PASS	Horizont	PK
7	2906.6604	17.76	17.68	35.44	54.00	18.56	PASS	Horizont	AV

Test_Mode	BLE 1M GFSK Transmitting	Test_Frequency	2480MHz
Remark:	/	Test_Date	2026/5/19

Test Graph

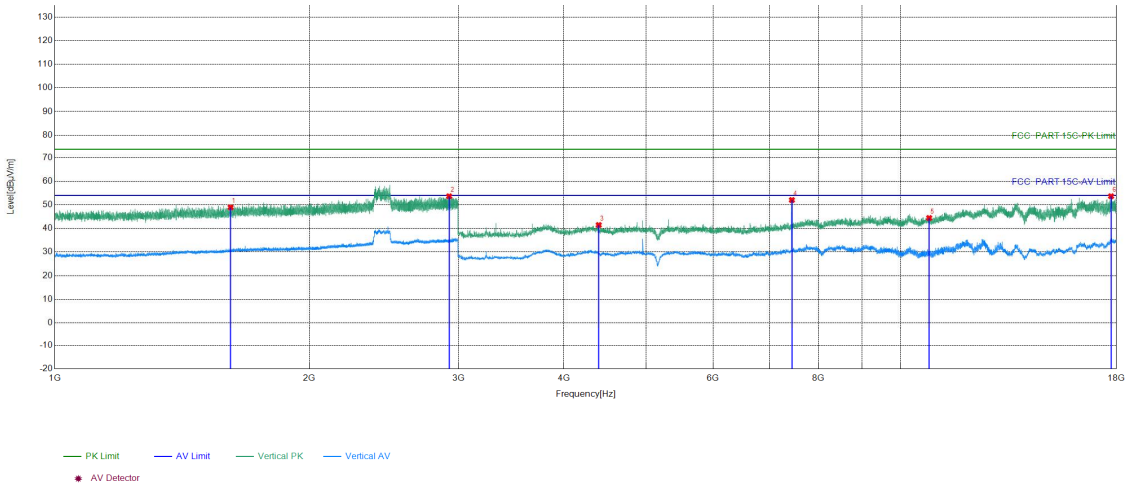

Suspected List									
NO	Freq. [MHz]	Factor [dB]	Reading [dBμV]	Level [dBμV/m]	Limit [dBμV/m]	Margin [dB]	Result	Polarity	Remark
1	1613.9076	13.71	35.26	48.97	74.00	25.03	PASS	Vertical	PK
2	2925.9951	17.67	35.97	53.64	74.00	20.36	PASS	Vertical	PK
3	4397.0931	-10.07	51.53	41.46	74.00	32.54	PASS	Vertical	PK
4	7439.296	-2.52	54.57	52.05	74.00	21.95	PASS	Vertical	PK
5	10812.5208	1.88	42.56	44.44	74.00	29.56	PASS	Vertical	PK
6	17739.9827	16.62	37.04	53.66	74.00	20.34	PASS	Vertical	PK

Test_Mode	BLE 1M GFSK Transmitting	Test_Frequency	2480MHz
Remark:	/	Test_Date	2026/5/19

Test Graph

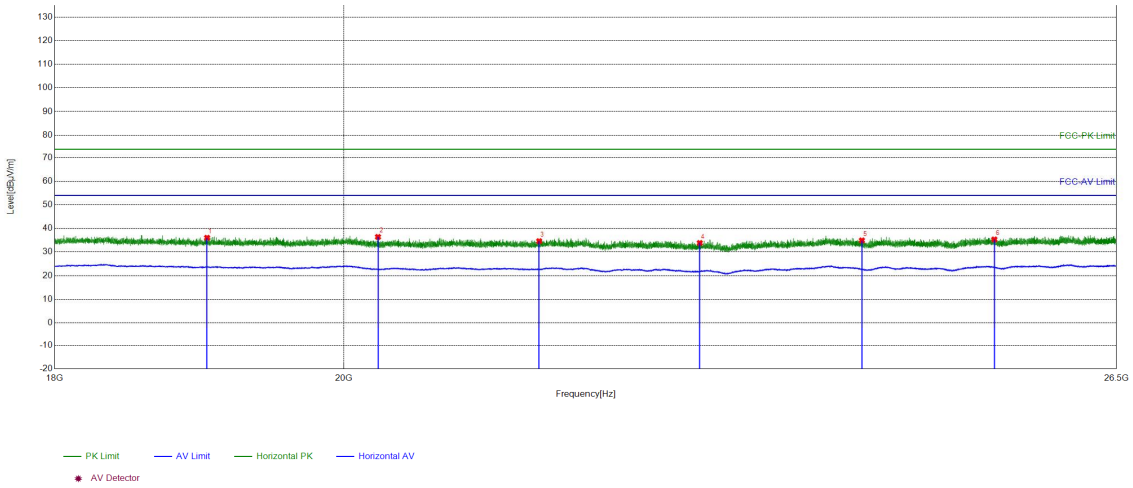

Suspected List									
NO	Freq. [MHz]	Factor [dB]	Reading [dBµV]	Level [dBµV/m]	Limit [dBµV/m]	Margin [dB]	Result	Polarity	Remark
1	19026.8411	-26.24	62.29	36.05	74.00	37.95	PASS	Horizont	PK
2	20249.19	-25.50	61.91	36.41	74.00	37.59	PASS	Horizont	PK
3	21473.919	-25.83	60.43	34.60	74.00	39.40	PASS	Horizont	PK
4	22768.0107	-25.04	58.88	33.84	74.00	40.16	PASS	Horizont	PK
5	24152.8861	-22.47	57.40	34.93	74.00	39.07	PASS	Horizont	PK
6	25347.0139	-21.33	56.67	35.34	74.00	38.66	PASS	Horizont	PK

Test_Mode	BLE 1M GFSK Transmitting	Test_Frequency	2480MHz
Remark:	/	Test_Date	2026/5/19

Test Graph

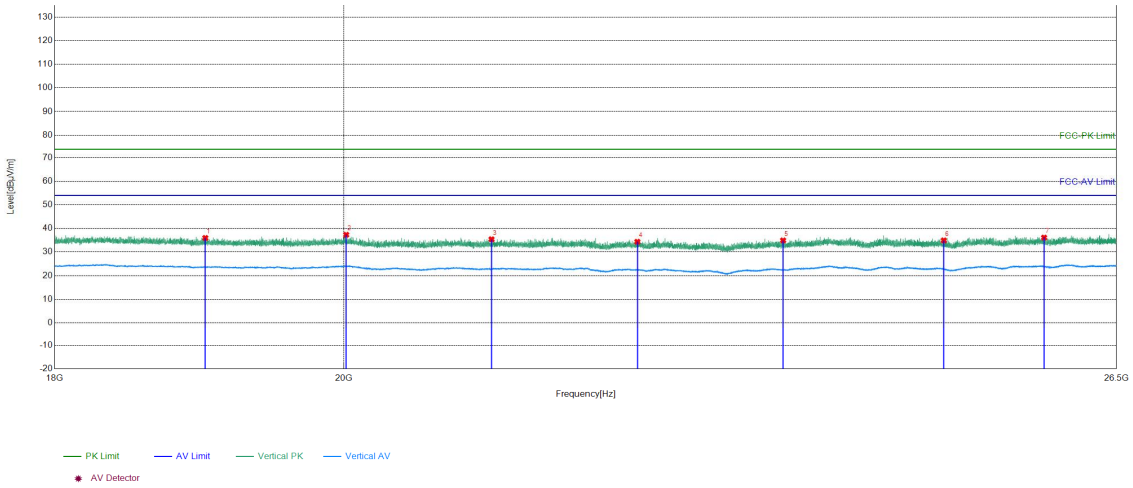

Suspected List									
NO	Freq. [MHz]	Factor [dB]	Reading [dBµV]	Level [dBµV/m]	Limit [dBµV/m]	Margin [dB]	Result	Polarity	Remark
1	19014.6006	-26.26	62.22	35.96	74.00	38.04	PASS	Vertical	PK
2	20015.9406	-24.69	62.00	37.31	74.00	36.69	PASS	Vertical	PK
3	21104.3242	-25.87	61.27	35.40	74.00	38.60	PASS	Vertical	PK
4	22255.9502	-25.32	59.67	34.35	74.00	39.65	PASS	Vertical	PK
5	23469.7988	-23.38	58.31	34.93	74.00	39.07	PASS	Vertical	PK
6	24884.5954	-22.04	56.98	34.94	74.00	39.06	PASS	Vertical	PK
7	25810.7924	-20.83	56.96	36.13	74.00	37.87	PASS	Vertical	PK

Note:
The field strength is calculated by adding the Antenna Factor, Cable Factor & Preamplifier. The basic equation with a sample calculation is as follows:
Final Test Level =Receiver Reading -Correct Factor
Correct Factor = Preamplifier Factor– Antenna Factor–Cable Factor

6 Appendix A

Refer to Appendix: Bluetooth LE of EED32S809357

7 PHOTOGRAPHS

Refer to Appendix Photographs of Report No. EED32S809357.

Statement

1. This report is considered invalid without approved signature, special seal and the seal on the perforation;

2. The Company Name shown on Report and Address, the sample(s) and sample information was/were provided by the applicant who should be responsible for the authenticity which CTI hasn't verified;

3. The result(s) shown in this report refer(s) only to the sample(s) tested;

4. Unless otherwise stated,the decision rule for conformity reporting is based on Binary Statement for Simple Acceptance Rule stated in ILAC-G8:09/2019/CNAS-GL015:2022;

5. Without written approval of CTI, this report can't be reproduced except in full;

*** End of Report ***