Intel-based Kiosk Solution

FAYTECH®

21.5" Entry Point Kiosk Solution

Installation, safety and user manual

Intel® Alder Lake-N Core
Processor N97

Version 1.0

© 2026 | www.faytech.com

CONTENT

1. FOREWORD 4

1.1 Notes on documentation 4

2. SAFETY, OPERATION & MAINTENANCE 5

2.1 Explanation of the safety symbols 5

2.2 Basic security measures 6

2.3 Duty of care for the operator 7

2.4 Requirements for the operating personnel 7

2.5 General Warning 7

3. WARRANTY 8

3.1 Warranty claims & repair 8

3.2 Life support policy warning 9

3.3 In case of defect 9

4. Product Description 10

4.1 Appropriate use 10

4.2 Interfaces & Features 11

4.3 Scope of delivery 14

5. Installation Instructions 15

5.1 Transportation 15

5.2 Unpacking 15

5.3 Connecting the device 16

5.4 Driver installations 17

6. Operating Instructions 18

6.1 Initial power-up and driver installation 18

6.2 BIOS settings 18

6.3 Troubleshooting 19

6.4 FAQs 19

7. Service and Support 20
7.1 Service 20
7.2 Contact 20
8. Appendix 21
8.1 CE and UKCA - Declaration of Conformity 21

1. FOREWORD

Please read this manual carefully prior to use of the product, and keep it properly.

1.1 Notes on documentation

This description is intended exclusively for trained specialists in controlling and automation technology who are familiar with the applicable national standards. For installation and commissioning of the components it is absolutely necessary to observe the following notes and explanations. The qualified personnel must ensure that the application or use of the described products meets all safety requirements, including all applicable laws, regulations, provisions and standards.

Disclaimer

This documentation has been carefully prepared. However, the products described are subject to continuous further development. Therefore, the documentation is not always completely checked for compliance with the described performance data, standards or other features. If it contains technical or editorial errors, we reserve the right to make changes at any time and without notice. The information, illustrations and descriptions in this documentation do not constitute grounds for claims for changes to products already supplied.

Copyright

© faytech

Passing on and reproduction of this document, use and communication of its contents are prohibited unless expressly permitted. All rights reserved in case of patent, utility model or design patent registration.

State of delivery

All components are delivered in specific hardware and software configurations depending on the application requirements. Changes to the hardware or software configuration, which go beyond the documented possibilities are not permitted and result in the exclusion of liability of faytech.

Notice on waste recycling

If this Product is no longer needed or reaches its service life, it shall be submitted to the qualified recycling pants recognized by state in accordance with the relevant laws and regulations for recycling of waste electric products in order to care and protect our earth.

2. SAFETY, OPERATION & MAINTENANCE

2.1 Explanation of the safety symbols

The following safety symbols are used in these operating instructions. These symbols are primarily intended to draw the reader's attention to the text of the adjacent safety instructions.

DANGER	**Acute danger of injury!** If the safety instruction next to this symbol is not observed, there is an immediate danger to life and health of persons.
WARNING	**Caution Risk of injury!** If the safety instruction next to this symbol is not observed, there is a danger to life and health of persons.
CAUTION	**Injury to persons!** If the safety instruction next to this symbol is not observed, persons may be injured.
Attention	**damage to the environment or equipment** If the note next to this symbol is not observed, the environment or equipment may be damaged.
Note	**Tip or pointer** This symbol indicates information that contributes to better understanding.

2.2 Basic security measures

Below are some basic security measures to ensure proper operation of the Touch Kiosks.

Attention	**Switch off all system components, then disconnect the fieldbus** Before opening the Touch Kiosk housing and whenever the Touch Kiosk is not used for control purposes, for example during the functional test after a repair, all system parts must first be switched off and then the Touch Kiosk must be disconnected from the system. Switched off system parts must be secured against being switched on again.

Attention	**Do not replace any parts when under voltage** When installing and removing components, the supply voltage must be switched off. Damage can occur during installation in the Touch Kiosk: • If metal objects such as screws or tools are placed in the circuit boards. • If PC internal connection cables are pulled off or plugged in during operation.

2.3 Duty of care for the operator

The operator must ensure that:

- The Touch Kiosk is only used for its intended purpose (see chapter Product Description).
- The Touch Kiosk is only operated in a faultless, fully functional condition.
- The operating manual is always available in a legible condition and complete at the place of use of the Touch Kiosk.
- Only sufficiently qualified and authorized personnel operate, maintain and repair the Touch Kiosk.
- This personnel is regularly instructed in all applicable questions of occupational safety and environmental protection, and the operating manual and in particular the information contained therein contained in the safety instructions.
- All safety and warning notices attached to the Touch Kiosk are not removed and stay legible.

Depending on the type of machine and system in which the Touch Kiosk is used, there are national regulations for the control of such machines and systems which the operator must comply with. These regulations regulate, among other things, the intervals at which the controller must be checked.

The operator must arrange for this inspection within a certain period of time.

Attention	**Only qualified personnel may open the housing of the Touch Monitor** The operator must ensure that only trained electrical specialists open the housing of the Monitor. In this case the warranty will become invalid.

In the event of faults on the Touch Kiosk, the list in the Troubleshooting section can be used to determine which measures should be taken.

2.4 Requirements for the operating personnel

Every user of the Touch Kiosk must have read this operating manual.

2.5 General Warning

If you notice a burning smell or the device is making noise, disconnect it from the power supply immediately.

Note	**Cleaning** To clean the device, switch it off and use a dry, soft cloth with light pressure.

3. WARRANTY

3.1 Warranty claims & repair

faytech devices are produced following the most modern production and test processes. Carefully selected components and accurate production ensure reliable operation and long life. faytech warrants to the original purchaser that each faytech display delivered shall be free from defects in material or workmanship at time of shipment, and that each such module delivered will meet the published specifications for a period of 24 months as measured from the date of original shipment. faytech's obligation under the Warranty contained herein is limited to the repair or replacement of any faytech touch monitor that does not meet the specifications, provided that said product is returned to faytech, transportation charges pre-paid, and provided that upon faytech's examination, the product, when tested within the specified ratings and in accordance with good engineering practice, does not meet the specifications as defined. THIS WARRANTY IS IN LIEU OF ALL OTHER WARRANTIES, EXPRESSED OR IMPLIED, INCLUDING WITHOUT LIMITATION THE WARRANTY OF MERCHANTABILITY AND THE WARRANTY OF FITNESS FOR A PARTICULAR PURPOSE.

All claims under warranty must be made promptly after occurrence of circumstances giving rise thereto and must be received within the applicable warranty period by faytech or its authorized representative. Such claims should include the Product type and serial numbers and a full description of the circumstances giving rise to the claim. Before any Products are returned for repair and/or adjustment, written authorization from faytech or its authorized representative for the return and instructions as to how and where these Products should be shipped must be obtained. Any product returned to faytech for examination shall be sent prepaid via the means of transportation indicated as acceptable by faytech. faytech reserves the right to reject any warranty claim not promptly reported and any warranty claim on any item that has been altered or has been shipped by non-acceptable means of transportation. When any Product is returned for examination and inspection, or for any other reason, Customer will be responsible for all damage resulting from improper packing or handling and for loss in transit, notwithstanding any defect or nonconformity in the Product. In all cases faytech has sole responsibility for determining the cause and nature of failure, and faytech's determination with regard thereto shall be final. If it is found that faytech's Product has been returned without cause and is still

serviceable, customer will be notified and the Product returned at Customer's expense. In addition, a charge for testing and examination may, in faytech's sole discretion, be made on Products so returned. SELLER'S LIABILITY FOR DAMAGES SHALL NOT EXCEED THE PAYMENT, IF ANY, RECEIVED BY SELLER FOR THE UNIT OF PRODUCT OR SERVICE FURNISHED OR TO BE FURNISHED AS THE CASE MAY BE WHICH IS THE SUBJECT OF CLAIM OR DISPUTE. IN NO EVENT SHALL SELLER BE LIABLE FOR INCIDENTAL, CONSEQUENTIAL OR SPECIAL DAMAGES. LIABILITY TO THIRD PARTIES, FOR BODILY INJURY INCLUDING DEATH, RESULTING FROM SELLER'S PERFORMANCE SHALL BE DETERMINED IN ACCORDANCE WITH APPLICABLE LAW AND THE TOTAL LIABILITY LIMITATION STATED ABOVE SHALL NOT BE CONSTRUED AS A LIMITATION ON SELLER FOR DAMAGES FOR ANY SUCH BODILY INJURY, INCLUDING DEATH.

WARRANTY FOR ITEMS REPLACED UNDER WARRANTY Whenever a failed module is replaced under Warranty, the greater of the balance of the original Warranty Period or 90 days will constitute the remaining warranty period. The replaced unit does not carry a new Warranty.

3.2 Life support policy warning

LIFE SUPPORT POLICY "WARNING: DO NOT USE IN LIFE SUPPORT" SELLER'S PRODUCTS ARE NOT AUTHORIZED FOR USE AS CRITICAL COMPONENTS IN LIFE SUPPORT DEVICES OR SYSTEMS WITHOUT THE EXPRESS PRIOR WRITTEN APPROVAL OF THE CEO OF FAYTECH. As used herein, "Life Support Devices or Systems" are devices which support or sustain life and whose failure to perform when properly used in accordance with instructions for use provided in the labeling can be reasonably expected to result in a significant injury to the user. A "Critical Component" is any component in a life support device or system whose failure to perform can be reasonably expected to cause the failure of the life support device or system or to affect its safety or effectiveness.

3.3 In case of defect

If your device does have a defect within the warranty period, please contact faytech directly. The warranty period is 24 months from the date of purchase under the following conditions:

- All warranties are void if the unit has been opened or disassembled without faytech's prior approval.
- Damage caused by improper handling or operation, by incorrect installation or storage, through improper connections, as well as due to force majeure or other external influences are not covered by the warranty.
- For warranty claim, we reserve the right to replace the defective components or to exchange the device.
- Exchanged components or devices become the property of faytech.
- Claims for damages are excluded in so far as they are not based on intent or gross negligence of the manufacturer.
- After expiration of the warranty period, warranty claims can no longer be pursued.
- Any warranty claim must be accompanied by proof of purchase (receipt or invoice).

4. PRODUCT DESCRIPTION

4.1 Appropriate use

The faytech Capacitive Touch Kiosks are used in many different application areas, such as but not limited to: industrial, medical and retail applications.

Front of the 21.5" Floor-Standing Kiosk Solution

4.2 Interfaces & Features

Interfaces of the Capacitive Touch Kiosks

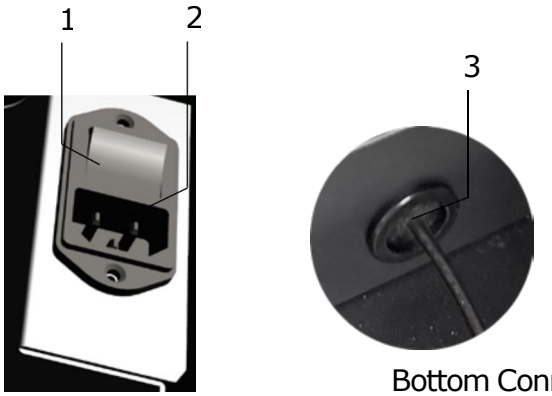

Bottom Connectors of the 21.5" Floor Standing Kiosk Solution

On / Off switch

With the button (**1**) the printer can be switched on and off. There is an optional USP, which allows for a switch to the entirety of the kiosk, it is located at the base internally of the kiosk.

Power supply

The power supply of the Touch Kiosk is established via the socket (**2**). The AC-In input is 180~264V AC.

Cable Cover Hole

This cable cover (**3**) is located at the bottom back of the kiosk and allows for easy cable management with the single power cable.

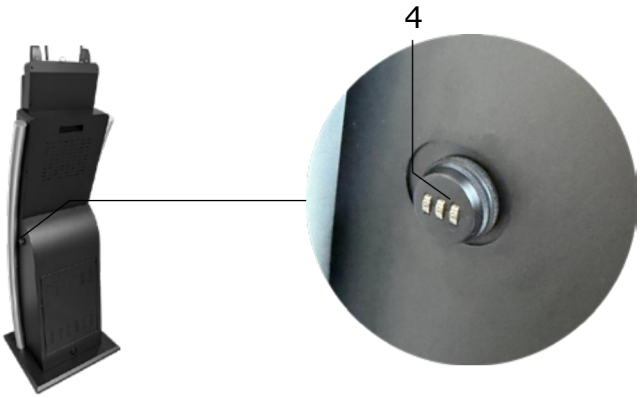

Side view Connectors of the 21.5" Floor Standing Kiosk Solution

3-Digit Lock

The side of the kiosk has a 3-digit lock **(4)** which can be configured to any combination as needed. Once locks the front is unable to be opened. The front allows access to open the back plates respectively.

Front-side of the 21.5" Floor-Standing Kiosk Solution

LED Light Indicator

This LED light indicator (**5**), shows the status of the kiosk, and is either red (off but connected to power), blue (connected & working).

W-LAN antenna connector

There are 2 antenna connectors on the top (**5**), these allow for connection via W-LAN with the supplied antenna. Frequency band: 2.4GHz, Gain: 2dBi (±0.5). Max. Transmission power: 20.65mW (with suppliedantenna)

Plate Holder

The top of the kiosk has 2 plate holders (**7**) for banner, brand or information placement, such as cardboard, plastic or metal signs.

12/22

Front-facing Motion Radar

This font facing motion sensor/radar (**8**), allows the kiosk to detect wheter someone is standing infront of it, and is ready to operate the kiosk.

ADA Keypad

The ADA keypad (**9**) is designed for accessibility, featuring large, tactile buttons that allow users to easily navigate the kiosk's functions, providing an inclusive interface for all users.

Audio Speakers

The kiosk is equipped with high-quality audio speakers (**10**) that deliver clear sound for audio instructions or promotional content.

Scanner

This scanner (**11**) allows for the reading of barcodes or QR-codes. Either a Honeywell3680 or ZebraSe2707 is intalled, based on the individual requirements.

A4 Document Printer

An A4 document printer (**12**) is integrated into the kiosk, enabling users to print documents directly from the interface. This printer supports various paper types and ensures fast, high-quality prints, making it ideal for generating receipts, tickets, or promotional materials. KPM216HIII or KM216IIIare installed, based on request (optional).

Flyer Holder

The flyer holder (**13**) is located on the front of the kiosk and is designed to hold promotional flyers or brochures securely. This holder can accommodate various sizes of printed materials.

Status LED

No LED
The Touch Kiosk is switched off.

Green LED
The Touch Kiosk is switched on.

Attention	**Moving or cleaning the device** Make sure that you only clean or move the device when the LED light is off.

4.3 Scope of delivery

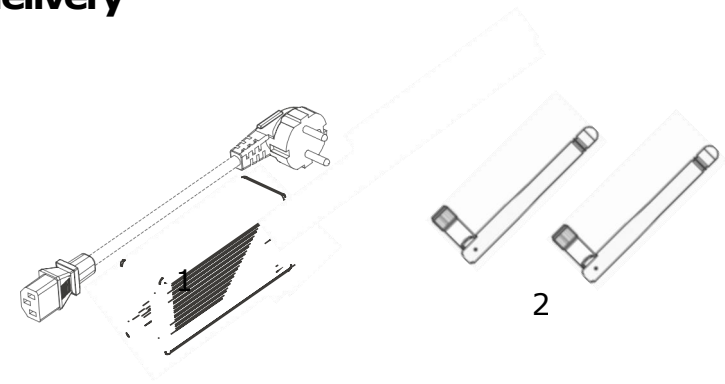

Power supply unit
The supplied AC cable (**1**) has a 3-pin connection. The power supply is 180~264V AC.

W-LAN antenna
The supplied W-LAN antennas (**2**) can be screwed onto the W-LAN connector to connect the Touch Kiosk to a wireless network (Internet). The antenna included in the package has an RP-SMA female connector. Frequency band: 2.4GHz / Max. Transmission power: 20.65mW

5. INSTALLATION INSTRUCTIONS

5.1 Transportation

Despite the robust design, the built-in components are sensitive to strong vibrations and shocks. Therefore, protect your Touch Kiosk from high mechanical stress during transport. Use the original packaging for shipping.

Attention	**Risk of damage to the device** When transporting the device in cold weather or if the device is exposed to extreme temperature fluctuations, make sure that no moisture (condensation) condenses on or in the device. Allow the device to slowly adjust to room temperature before putting it into operation. If there is condensation, the unit may only be switched on after a waiting period of about 12 hours.

5.2 Unpacking

Proceed as follows when unpacking the device:

1. Remove the packaging.
2. Do not throw away the original packaging. Keep it for re-transport.
3. Check the delivery for completeness based on your order.
4. Please keep the documents supplied with the device; they contain important information about the device and on how to use it.
5. Check the package contents for visible transport damage.
6. If you notice transport damage or discrepancies between the contents ofthe package and your order, please inform the faytech service team.

5.3 Connecting the device

The connectors are located at the rear of the Touch Kiosk and are documented in the chapter Product Description. To start the device, connect with the supplied AC cable. For all power information see the respective product label.

CAUTION	**Fire or smoke** If the appliance catches fire or starts smoking, immediately unplug the appliance and then extinguish with powder or nitrogen.

5.4 Driver installations

In order to fully utilize all functions of the faytech Touch Kiosks, it is recommended to download the required drivers from the faytech website in the download section (www.faytech.com/downloads/).

While the below Linux and Windows drivers are available for download, they are not suggested. Instead, the native OS drivers should be used (Plug and Play).

Capacitive Touch Driver - Linux/Debian

This is the capacitive touch driver to work with the Debian and Linux operating systems.

Capacitive Touch Driver - All OS (except Linux)

This is the capacitive touch driver to work with all operating systems, except Linux.
OS's included: Android, MS-DOS, macOS, QNX and Windows.

Note	**Debian/Linux Preinstalled** If a current Ubuntu is preinstalled on your Touch-PC with integrated SSD, the username is "User" and the password "user123". If you want to change the password, open a terminal. Type "sudo su", "enter". The password is still "user123". Then "passwd user" and enter the new password.

6. OPERATING INSTRUCTIONS

6.1 Initial power-up and driver installation

To turn the unit on, press the power button on the back or side of the unit. When you turn on the Touch Kiosk for the first time, the pre-installed operating system (Debian, Linux or Windows) will start. To get the most out of your device, you must download the correct drivers for your device. You can find these drivers on the website under Downloads: www.faytech.com/downloads. This series uses the Elkhart Lake and Tiger Lake U mainboards and therefore requires the appropriate drivers for this specific series.

Attention	**First shut down, then switch off** If the Touch Kiosk is switched off while the software is writing a file to the hard disk, this file will be destroyed. Control software usually writes something to the hard disk on its own at intervals of a few seconds, so the probability of causing damage by switching off while the software is running is very high.

6.2 BIOS settings

Details on how to get into the BIOS is explained below. Please note that this is a special BIOS for integrated monitor PC solutions. Accordingly, after adjustments in the BIOS, you may not be able to see an image on your Touch Kiosk screen. For this reason only experienced users should make changes to the BIOS. If the system is adjusted, proceed as follows: Press "Del" on a connected keyboard (even if you do not see an image) until you are sure that you are in the BIOS. Then press F5, Enter, F10, Enter. The system will reboot and you should have a picture on your display again.

6.3 Troubleshooting

No image

1. First check whether the power supply is correctly connected and working (green LED on power supply unit).
2. When installing new graphics card drivers, the BIOS might be changed and no boot screen is visible. Wait one to two minutes until Windows is loaded.
3. Connect an external keyboard via USB and check whether the Num-Lock LED of the Keyboard lights up (press Num-Lock). If this lights up, there is usually only an incorrect BIOS. Turn off the computer again, restart it and press "Del" until you are sure that you are in the BIOS. Set the graphics options in the BIOS according to the Chapter BIOS Settings.
4. If none of the above points leads to success, please contact our direct Manufacturer service, under the contact details given on the Service and Support page.

Touch function is not accurate

1. Please download the latest touch drivers from our website www.faytech.com and perform a recalibration to recalibrate the touch screen.

6.4 FAQs

How do I connect the touch display to the appropriate power supply?
All displays have an external power supply. Therefore you have two possibilities: You can use the 12V DC power supply unit included in the scope of delivery, or your own suitable power supply capable of supplying 12V DC power.

The touch function does not work properly, what can I do?
If you have problems with the touch, please check if the driver and all cables are installed correctly. Otherwise the most common error is caused by the protective foil on the touch display. Please remove the protective foil to get the best possible use out of the display.

Does the touch functionality affect the image quality?
No, the touch panel is transparent and non-reflective. So you will not notice the additional panel.

7. SERVICE AND SUPPORT

7.1 Service

If you think your faytech product has a defect please always contact us directly. Our trained after sales service specialists can help you to resolve your problems regarding the device. Please check the manual and our frequently asked questions before contacting us – you will usually find an answer to your question.

Please attach your invoice and a detailed description of the issues you are facing with your device to your contact E-mail/fax. In reply, you will receive an e-mail/fax with your RMA number and additional information. For defective accessories that were content of the original delivery, we usually send you a replacement before receiving the damaged goods. In case of a defective product, we try to check and solve the problem within 3 working days after receipt. Make sure that shipping has been paid before sending the goods back to us. We do not accept postage due packages at our service centers. Anything shipped with postage due will be rejected. Within the first 30 days after the purchase of a new faytech product, we will refund the shipping costs for returned defective products. For the rest of the warranty period, we will only cover shipping costs for repaired or replaced items that we ship back to you (one way).

For support outside of China, we work with local representatives / local service partners together who may work on our behalf in our name. For more information, feel free to cotact us under the following contact details.

7.2 Contact

Global Support: +86 755 89580612
Support Europe: +49 761 4514 0
Support North America: +1 646 843 0877
Support India: +91 9843429654
Support Japan: +81 366 722 920
Support South Korea: +82 10 8589 7231
Support E-Mail: support@faytech.com
Homepage (Global): https://www.faytech.com/
Support Page: https://www.faytech.com/rma/

Headquarters

faytech Tech. Co., Ltd.
Fl. 2, Bldg. 8, Winlead Intelligent Park,
Bantian, Shenzhen
China

8. APPENDIX

8.1 CE and UKCA - Declaration of Conformity

Hereby faytech declares that the equipment is in compliance with the essential requirements and other relevant regulations of the directives 2014/30/EU, 2014/35/EU, 2011/65/EU, 2015/863 RoHS, UK SI 2016/1091 and UK SI 2016/1101.

The long version of the CE Declaration of Conformity can be found in English at: www.faytech.com/ce

8.2 FCC - Declaration of Conformity

This device complies with part 15 of the FCC Rules. Operation is subject to the following two conditions:

(1) this device may not cause harmful interference, and

(2) This device must accept any interference received, including interference that may cause undesired operation.

Changes or modifications not expressly approved by the party responsible for compliance could void the user ' s authority to operate the equipment. This equipment has been tested and found to comply with the limits for a Class B digital device, pursuant to Part 15 of the FCC Rules. These limits are designed to provide reasonable protection against harmful interference in a residential installation. This equipment generates uses and can radiate radio frequency energy and, if not installed and used in accordance with the instructions, may cause harmful interference to radio communications. However, there is no guarantee that interference will not occur in a particular installation. If this equipment does cause harmful interference to radio or television reception, which can be determined by turning the equipment off and on, the user is encouraged to try to correct the interference by one or more of the following measures:

-Reorient or relocate the receiving antenna.

-Increase the separation between the equipment and receiver.

-Connect the equipment into an outlet on a circuit different from that to which the receiver is connected.

-Consult the dealer or an experienced radio/TV technician for help.ct.

This equipment complies with the FCC RF radiation exposure limits set forth for an uncontrolled environment. This equipment should be installed and operated with a minimum distance of 20cm between the radiator and any part of your body.

Version 1.0

Entry Point Kiosk Solution

Product Series

EN_faytech_21.5_Entry_Point_ _ _user_manualKioskinstallationand_EN · 11.05.26 · specification is subject to change

© 2026 | www.faytech.com