H6

Car wireless charging bracket

User Manual

Specifications

Product Name: Car wireless charging bracket

Power: 15W / 10W / 7.5W / 5W
Effective Transmission Distance: 0–6mm
Dimensions: 115 × 62 × 49 mm
Charging Interface: TYPE-C

包装清单

Car Phone Holder ×1
User Manual ×1
Data Cable ×1
Car Air Vent Mount (Hook) ×1

Functional Components

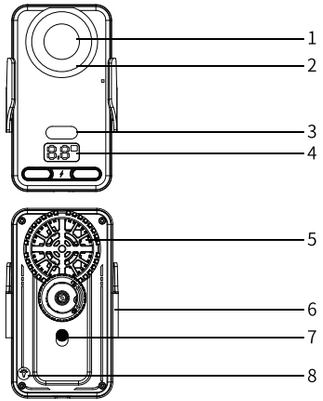

1.Cooling Effect Zone 2.Wireless Charging Induction Area
3.Infrared Induction 4.Temperature Control Display
5.Heat Dissipation Holes 6.Left and Right Clamping Arms
7.Lock Button 8.Touch Control for Lighting

Specifications and Parameter

1.Material: PC+ABS+Aluminum Alloy
2.Input Voltage/Current: 5 V/3A, 9V/3A
3.Output Power: 15W/10W/7.5W/5W auto-detection
4.Charging Frequency: 111K–205KHz
5.Charging Distance: 0–6mm
6.Supported Standard: Compliant with Qi wireless charging protocol
7.Supported magnetic devices, such as iPhone 17 Series / 16 Series / iPhone 15 Series / 14 Series / 13 Series, and other wireless charging phones like iPhone 11 Series / iPhone XS Max / iPhone XR / iPhone X / iPhone 8 / iPhone 8X / HUAWEI Mate 60 Series / Mate 50 Series / Mate 40 Series / Mate 30 Series / Mate 20 Series / P50 Pro / P40 Pro / P30 Pro / V40 Series / V30 Series / SAMSUNG GALAXY Series / S8–S20 Series / Note8–10 Series. For non-magnetic wireless charging phones, attach a magnetic sticker to enable normal use.
8.For devices that do not support wireless charging, a Qi-compliant wireless receiver is required for charging.

User Manual

1.When in use, connect this product to a compatible data cable.
2.Plug the USB end of the data cable into the vehicle's interface (e.g., cigarette lighter adapter or USB charging port).
3.Secure the base clamp onto the air vent, or place it on any other suitable clipping surface.
4.After connecting the device to a 9V DC power source, touch the button to open the wings. Place your phone inside; the wings will automatically close after one second, and the wireless fast charger will begin charging your phone.
5.To remove the phone, touch the button to open the wings. Once the phone is removed, the wings will automatically close.
6.This device features built-in over-voltage protection, over-temperature protection, magnetic field protection, and short-circuit protection. It will automatically stop working if an abnormality is detected.
7.After the bracket is powered on without placing a phone, the cooling chip's heat dissipation fan will automatically turn off after working for 5 minutes. Placing a phone will start the cooling, and the cooling will automatically turn off 20 seconds after the phone is removed.
8.Touch the backlight button to switch the light color. Long press for 3 seconds to turn off the light, and press again to turn on the touch light.
9. Slide the back button to lock the 90° rotation with one key, preventing accidental touch.

Precautions

1.Do not excessively squeeze or impact the device.
2.Do not use this product in environments with severe heat, humidity, or corrosive conditions to avoid damaging the device's circuitry.

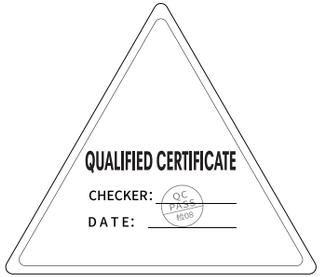

Thank you for using this product!

FCC Information

This equipment has been tested and found to comply with the limits for a Class B digital device, pursuant to part 15 of the FCC Rules.
These limits are designed to provide reasonable protection against harmful interference in a residential installation. This equipment generates,
uses and can radiate radio frequency energy and, if not installed and used in accordance with the instructions, may cause harmful interference
to radio communications. However, there is no guarantee that interference will not occur in a particular installation. If this equipment does
cause harmful interference to radio or television reception, which can be determined by turning the equipment off and on, the user is
encouraged to try to correct the interference by one or more of the following measures:
—Reorient or relocate the receiving antenna.
—Increase the separation between the equipment and receiver.
—Connect the equipment into an outlet on a circuit different from that to which the receiver is connected.
—Consult the dealer or an experienced radio/TV technician for help.

This device complies with part 15 of the FCC Rules. Operation is subject to the following two conditions:
(1)This device may not cause harmful interference, and
(2) this device must accept any interference received, including interference that may cause undesired operation.

changes or modifications not expressly approved by the party responsible for compliance could void the user's authority to operate the equipment.

This equipment complies with FCC exposure limits set forth for an uncontrolled environment.
This equipment should be installed and operated with minimum distance of 20 cm between the radiator and your body.
This transmitter must not be co-located or operating in conjunction with any other antenna or transmitter.