AGENEWTECH

H1503BQ

Hardware Design Guide_V1.1

www.agenewtech.com

Our aim is to provide customers with timely and comprehensive service. For any assistance, please contact our company headquarters:

(Agenewtech Building) No.52, Huigu Pioneer Park C, Huishan Economic Development Zone, Wuxi City, Jiangsu, China
Postal Code: 214174
PhoneNum: +86 0510 8235 0372 Mailbox: Asupport@agenewtech.com

Introduction

AGENEW OFFERS THE DOCUMENT AS A SERVICE TO ITS CUSTOMERS. CUSTOMERS MUST DESIGN THEIR PRODUCTS ACCORDING TO THE SPECIFICATIONS AND PARAMETERS PROVIDED IN THE DOCUMENTS. AGENEW SHALL NOT BE LIABLE FOR ANY DAMAGE CAUSED BY FAILURE TO COMPLY WITH RELEVANT OPERATION OR DESIGN SPECIFICATIONS. AGENEW HAS THE RIGHT TO UPDATE THE DOCUMENT BEFORE IT IS ANNOUNCED.

Disclaimers

AGENEW MAKES EFFORT TO ENSURE THE INTEGRITY, ACCURACY, TIMELINESS OR UTILITY OF THE FUNCTIONS UNDER DEVELOPMENT, BUT DOES NOT EXCLUDE THE POSSIBILITY OF ERRORS OR OMISSIONS OF THE ABOVE FUNCTIONS. UNLESS OTHERWISE SPECIFIED VALID AGREEMENTS, AGENEW MAKES NO IMPLIED OR EXPRESS GUARANTEE FOR THE USE OF FUNCTIONS UNDER DEVELOPMENT. TO THE MAXIMUM EXTENT PERMITTED BY APPLICABLE LAWS, AGENEW SHALL NOT BE LIABLE FOR ANY LOSS OR DAMAGE SUFFERED DUE TO THE USE OF THE FUNCTIONS UNDER DEVELOPMENT, WHETHER SUCH LOSS OR DAMAGE IS FORESEEABLE OR NOT.

Copyright

THE INFORMATION CONTAINED HERE IS PROPRIETARY TECHNICAL INFORMATION OF WUXI SUNNING SMART DEVICES CO.,LTD. ANY COPIES AND REPRINTS THIS DOCUMENT WITHOUT THE PERMISSION OF AGENEW WILL BEAR LEGAL RESPONSIBILITY.

Copyright © Wuxi Sunning Technology Co.,Ltd. 2021. All rights reserved.

About the Document

History

Version	Date	Author	Description
-	2024-05-21	Daniel Wu	Initial
1.0	2024-06-22	Daniel Wu	Controlled version
1.1	2024-08-26	Daniel Wu	Correct errors

Content

Content 1

Table 1

Figure 1

1 Introduction 4

1.1 Safety precautions 5

2 Product concept 5

2.1 Summary 6

2.2 Main Performance 7

2.3 Functional block diagram 10

3 Application Interfaces 11

3.1 Overview 11

3.2 Pin Assignment 12

3.3 Pin Description 13

3.4 Power Supply 23

3.5 Power On and Off 24

3.5.1 Power On 24

3.5.2 Power Off 25

3.6 VRTC Interface 25

3.7 Power Output 26

3.8 Charging and battery management 27

3.9 USB Interface 29

3.10 UART Interface 31

3.11 SIM Interface 32

3.12 SD Card Interface 34

3.13 GPIO Interface 37

3.14 I2C Interface 38

3.15 SPI Interface 39

3.16 ADC Interface 40

3.17 Motor Drive Interface 40

3.18 LCM Interface 41

3.19 Touchscreen Interface 42

3.20 Camera Interface 43

3.20.1 Design Considerations 49

3.20.2 Flashlight Interface 50

3.21 Sensor Interface 50

3.22 Audio Interface 51

3.22.1 Microphone Interface Reference Circuit 52

3.22.2 Handset Interface Reference Circuit 54

3.22.3 Headphone Interface Reference Circuit 54

3.22.4 Speaker Interface Reference Circuit 56

3.22.5 Audio Signal Design Considerations 56

3.23 Forced Download Interface 57

3.24 LEDs Indicator Interface 58

4 Wi-Fi and BT 59

4.1 Wi-Fi Overview 59

4.1.1 Wi-Fi Performance Metrics 59

4.2 BT Overview 61

4.2.1 BT Performance Metrics 62

5 GNSS 63

5.1 GNSS Performance Metrics 63

5.2 GNSS RF Design Guidance 63

6 Antenna Interface 65

6.1 Main/Diversity Interface 65

6.1.1 RF reference circuits 66

6.1.2 RF Signal Cable Layout Reference Guide 67

6.2 Wi-Fi/BT/GNSS Antenna Interface 69

6.3 GNSS Antenna Interface 70

6.3.1 Passive Antenna Reference Design 71

6.3.2 Active antenna reference design 71

6.4 Antenna Installation 72

6.4.1 Antenna Installation Requirements 72

6.4.2 The Recommended RF Connector For Antenna Mounting 73

7 Electrical, Reliability & RF Performance 75

7.1 Limit Parameters 75

7.2 Power rating 75

7.3 Operating and storage temperature 75

7.4 Operating current 76

7.5 RF Transmit Power 78

7.6 RF Receive Sensitivity 79

7.7 ESD Protection 80

8 Mechanical Dimensions 81

8.1 Module Mechanical Dimensions 81

8.2 Top and Bottom View of The Module 82

9 Storage, Production and Packaging 84

9.1 Storage 84

9.2 Production Welding 84

9.3 Packaging 86

10 Appendix A 87

Table

Table 1 H1503BQ Supported Frequency Bands 6
Table 2 Main performance parameters 7
Table 3 I/O Parameter Definition 13
Table 4 Pin Description 13
Table 5 Power Supply Description 26
Table 6 Charging Interface Pin Definition 28
Table 7 USB Interface Pin Definition 30
Table 8 The Length Of The USB Trace Inside The Module 31
Table 9 UART interface pin definition 32
Table 10 SIM Interface Pin Definition 33
Table 11 SD Card Interface Pin Definition 35
Table 12 The Length Of The SDIO Trace Inside The Module 36
Table 13 List of GPIO Interfaces 37
Table 14 I2C Interface Pin Definition 38
Table 15 SPI Interface Pin Definition 39
Table 16 ADC Interface Pin Definition 40
Table 17 Motor Drive Interface Pin Definition 40
Table 18 LCM Interface Pin Definition 41
Table 19 Touchscreen Interface Pin Definition 42
Table 20 Camera Interface Pin Definition 44

Table 21 The Length of The MIPI Trace Inside The Module 49

Table 22 Flashlight Interface Pin Definition 50

Table 23 Sensor Interface Pin Definition 50

Table 24 Audio interface pin definition 51

Table 25 Forced Download Pin Definitions 57

Table 26 LEDs Indicator Interface Pin Definitions 58

Table 27 Wi-Fi Transmit Performance 59

Table 28 WiFi Reception Performance 60

Table 29 BT Rate And Version Information 62

Table 30 BT Transmit and Receive Performance Metrics 62

Table 31 GNSS Performance 63

Table 32 Main/Diversity Antenna Interface Pin Definition 65

Table 33 H1503BQ Supported Frequency Bands 65

Table 34 Wi-Fi/BT/GNSS Antenna Interface Pin Definition 69

Table 35 Wi-Fi/BT Operating Frequency Bands 69

Table 36 GNSS Antenna Interface Pin Definition 70

Table 37 GNSS Operating Frequency Bands 70

Table 38 Antenna Requirements 72

Table 39 Limit Parameters 75

Table 40 Module Power Rating 75

Table 41 Operating and Storage Temperature 75

Table 42 H1503BQ Operating Current 76

Table 43 H1503BQ Module RF Transmit Power 78

Table 44 H1503BQ RF Receive Sensitivity 79

Table 45 ESD Performance Parameters (Temperature: 25°C, Humidity: 45%) 80

Table 46 Recommended Furnace Temperature Test Control Requirements 85

Table 47 Abbreviations for Terms 87

Figure

Figure 1 Functional Block Diagram 10

Figure 2 H1503BQ Pinout Diagram (Top View) 12

Figure 3 VBAT Input Reference Circuit 23

Figure 4 The Open-Set Drive Refers To The Boot Circuit 24

Figure 5 Boot Sequence Diagram 24

Figure 6 Sequence Diagram of Forced Shutdown 25

Figure 7 A Rechargeable Coin Cell Battery Powers The RTC 25

Figure 8 Schematic Diagram Of Battery Charging Connection 29

Figure 9 Mirco-USB Interface Reference Design 30

Figure 10 USB Type-C Reference Design 31

11 Level Translation Reference Circuit (UART1) 32

12 8-pin SIM Reference Circuit 34

Figure 13 Refer To The Circuit Diagram For The SD Card Interface 36

Figure 14 Motor Drive Circuit 41

15 LCM Circuit Reference Design 42

Figure 16 Touch Screen Interface Reference Circuit 43

Figure 17 2-Way Camera Reference Design 47

Figure 18 3-way Camera reference design 48

Figure 19 Sensor Reference Design Circuit 51

Figure 20 Standing Microphone Reference Circuit (The Sub-MIC Wiring Method Is The Same As The Main MIC) 53

Figure 21 Silicon Microphone Reference Circuit (The Wiring Method Of The Sub-MIC Is The Same As That Of The Main MIC) 53

Figure 22 Handset Output Interface Reference Circuit 54

Figure 23 Headphone Jack Reference Circuit 55

Figure 24 USB2.0 and Audio Swith IC Reference Circuit 55

Figure 25 EU/US headphone switcher IC Reference Circuit 56

Figure 26 Speaker Interface Reference Circuit 56

Figure 27 Forced Download Interface Reference Circuit 58

Figure 28 LEDs indicator interface reference circuit 58

Figure 29 RF reference circuits 67

Figure 30 Two-layer PCB Microstrip Line Structure 67

Figure 31 Two-layer PCB Board Coplanar Waveguide Structure 68

Figure 32 Four-layer PCB Coplanar Waveguide Structure (Reference Ground Is The Third Layer) 68

Figure 33 Four-layer PCB Coplanar Waveguide Structure (Reference Ground Is The Fourth Layer) 68

34 Wi-Fi/BT Antenna Interface Reference Circuit 70

Figure 35 Passive Antenna Reference Circuit 71

Figure 36 Active Antenna Reference Circuit 72

Figure 37 U.FL-R-SMT Connector Dimensions (mm) 73

Figure 38 U.FL-LP Connection Cable Series 74

Figure 39 Installation Dimensions (mm) 74

Figure 40 H1503BQ Top and Side View Dimensions 81

Figure 41 H1503BQ Module Package (Top-down Perspective) 81

Figure 42 H1503BQ Backplane Package (Top View) 82

Figure 43 Top View of The Module 82

Figure 44 Bottom View of The Module 83

Figure 45 Recommended Reflow Temperature Profile 85

Figure 46 Pallet Size (mm) 86

1 Introduction

This document defines the hardware interface specifications, electrical features and mechanical specifications of the H1503BQ module. With the help of this document, combined with the application manual and user guide provided by Agenewtech, customers can quickly apply H1503BQ modules to wireless applications.

1.1 Safety precautions

To ensure personal security and protecting products and working environments, follow the following safety instructions. Product manufacturers need to communicate the following security requirements to end users, and the security instructions are in the user manual of the terminal product. Agenewtech will not be responsible for the user due to the failure to follow the safety rules or errors.

	Road driving, safety first! Do not use the handheld mobile terminal when driving, even if it is free. Please stop first, call again!
	Close the mobile terminal device before boarding. The wireless function of the mobile terminal is prohibited on the aircraft to prevent interference from the aircraft communication system. No compliance with this prompt may affect flight safety, even violate the law.
	When entering hospital or health care, please note that there is a restriction of mobile terminal devices. RF interference may cause medical devices to operate, so there may be need to close the mobile terminal device.
	The mobile terminal device is not guaranteed to be effective in any case, such as when the device arrears or the SIM card is invalid. When you encounter the above situation in an emergency, use the emergency call function, and ensure that the device is turned on and is located in a region where the signal strength is sufficient.
	The mobile terminal device receives and transmits RF signals when booting. Radio frequency interference is generated when close to TV, radio, computer or other electronic devices.
	Make sure the mobile terminal device is far from flammable and explosive. Close mobile terminal equipment when approaching gas stations, oil depots, chemical plants or explosive workplaces. There is a safety hidden danger in any case-inventory of potential explosion hazards.

2 Product concept

2.1 Summary

The H1503BQ is a multi-network Smart LTE Cat 4 module launched by Agenewtech based on MediaTek quad-core ARM Cortex-A53 processor, equipped with Android13 operating system. Its powerful performance, neon engine processing, and 2D/3D graphics acceleration capabilities meet customers' needs for high speed and multimedia capabilities in industrial and consumer applications.

- Comprehensive coverage of multiple network standards
- Integrated Wi-Fi a/b/g/n/ac and BT5.0 wireless communication modes
- Support for GPS/Galileo/GLONASS/Beidou quad-mode satellite positioning
- Support for various audio and video codecs
- Main screen supports up to HD+ (1280*800)
- Support for 1080P@30fps video playback
- Equipped with audio, video input/output interfaces, and rich sets of GPIO interfaces

The frequency bands and formats corresponding to the H1503BQ module are as follows:

Table 1 H1503BQ Supported Frequency Bands

Type	Band
LTE-FDD	B2/B4/B5/B7/B12/B13/B17/B25/B26/B66/B71
LTE-TDD	B41B
WCDMA	B2/B4/B5
GSM	B2/B3/B5/B8
Wi-Fi 802.11a/b/g/n/ac	2402MHz~2482MHz;5180MHz~5825MHz
BT5.0	2402MHz~2482MHz
GNSS	GPS： 1575.42MHz±1.023MHz GLONASS: 1597.5MHz~1605.8MHz Beidou： 1561.098MHz±2.046MHz Galileo：1575.42MHz±1.023MHz

H1503BQ is a PMT module with a total of 275 pins, including 146 LCC pins and 129 LGA pins. The size is only 40.5(±0.15)mm × 40.5(±0.15)mm× 26(±0.2)mm, which can be embedded in various M2M product applications through the pad, making it widely used in smart cash registers, smart POS, tax controllers, security monitoring, vehicle equipment, high-end information collection equipment, smart robots, smart homes, smart hardware, industrial smart handheld devices, drones, high-end police or law enforcement equipment, smart intercom equipment, smart wearables, vending machines, logistics cabinets and other equipment used in different industries.

2.2 Main Performance

The following table describes the detailed performance parameters of H1503BQ:

Table 2 Main performance parameters

performance	illustrate
Application Processor	Quad-core 64-bit ARM Cortex-A53 processor @2.0GHz Two Quad-core processors with 512KB L2 cache
Modem System	Imagination MIPS32R®InterAptive Operates at 864MHz
GPU	IMG GE8300 @660MHz
Storage	32GB eMMC + 4GB LPDDR4X (default) 8GB eMMC + 1GB LPDDR3 (optional)
OS	Android 13
Power Supply	VBAT supply voltage range: 3.4V~4.4V Typical supply voltage: 3.8V
Transmit Power	Class 4 (33dBm±2dB) for GSM850 Class 4 (33dBm±2dB) for EGSM900 Class 1 (30dBm±2dB) for DCS1800 Class 1 (30dBm±2dB) for PCS1900 Class E2 (27dBm±3dB) for GSM850 8-PSK Class E2 (27dBm±3dB) for EGSM900 8-PSK Class E2 (26dBm±3dB) for DCS1800 8-PSK Class E2 (26dBm±3dB) for PCS1900 8-PSK Class 3 (24dBm+1/-3dB) for WCDMA bands Class 3 (23dBm±2dB) for LTE-FDD bands Class 3 (23dBm±2dB) for LTE-TDD bands
LTE Characteristics	Support 3GPP R8 Cat 6 and Cat 4 Suppert 1.4MHz~20MHz RF bandwidth Support downlink 2×2 MIMO ● Cat 4 FDD: Max 150Mbps (DL)/Max 50Mbps (UL) ● Cat 4 TDD: Max 150Mbps (DL)/Max 50Mbps (UL)

UMTS Characteristics	Support 3GPP R9 DC-HSDPA/DC-HSUPA/HSPA+/HSDPA/HSUPA/WCDMA Support QPSK、16-QAM and 64-QAM ● DC-HSDPA: Max 42Mbps ● DC-HSUPA: Max 11.2Mbps ● WCDMA: Max 384Kbps (DL)/Max 384Kbps (UL)
GSM Features	R99： CSD：9.6Kbps、14.4Kbps GPRS： Supports GPRS multi-slot level 33 (default 33) Encoding Format: CS-1、CS-2、CS-3 and CS-4 Up to 107 Kbps (DL) / Up to 85.6 Kbps (UL) EDGE： Support for EDGE multi-slot level 33 (default 33) Supports GMSK and 8-PSK modulation encoding Downstream encoding formats: CS 1-4 and MCS 1-9 Uplink encoding format: CS 1-4 and MCS 1-9 Up to 296 Kbps (DL) / Up to 236.8 Kbps (UL)
Wi-Fi Features	2.4GHz and 5GHz bands, supporting 802.11a/b/g/n/ac with a maximum rate of 433Mbp AP and STA modes are supported
Bluetooth Characteristics	BT5.0
Satellite Positioning	GPS/GLONASS/BDS/Galileo
Short Message (SMS)	Text vs. PDU mode Peer-to-peer SMS messaging SMS Cell Broadcasting
LCM Interface	Supports up to HD+ (1280×800) @60fps
Camera Interface	2 sets of 4-lane MIPI_CSI, Max up to 2.8Gbps/lane Supports up to 21MP pixel camera
Video Codec	Video codec: 1080p @30fps Wi-Fi video: encode max 1080P @30fps, decode max 1080P @30fps
Audio Interface	Audio Inputs: 3 analog microphone inputs with integrated internal bias Audio Output: Class AB Differential Lineout output Class AB stereo headphone output Class AB differential handset output
Audio Codecs	Audio encode: AMR-NB,AMR-WB,AAC, OGG, ADPCM Audio decode: WAV, MP3,MP2,AAC,AMR-NB,AMR-WB,MIDI,Vorbis,APE,AAC-plus v1,AAC-plus v2, FLAC, ADPCM
USB Interface	Support USB 2.0 high-speed mode, 2.0 up to 480Mbps; USB OTG is supported
UART Interface	2 sets of serial ports: UART0 and UART1
Motor Drive Interface	ERM motors can be driven directly

SD Card Interface	Support SD 3.0 Support SD card hot-swappable
(U) SIM Interface	2 sets of (U) SIM ports Support USIM/SIM Card: 1.8V and 3.0V Support dual SIM dual standby (software supports by default)
I2C Interface	6 sets of I2C for peripherals such as touch screens, cameras, sensors, etc
I2S Interface	2 sets of I2S ports to support I2S peripherals Multiplex dedicated SPI interfaces
ADC Interface	2 general-purpose ADC interfaces with up to 12-bit sampling accuracy (one of which is dedicated to detecting battery IDs).
SPI Interface	5 sets of SPI interfaces, all of which can be used as general-purpose SPI, and the module can only be used as the main device ● SPI2, SPI4 (default), can be used to connect MEMS sensors ● SPI0 (default), SPI1, can be used to connect a fingerprint module
Charging Port	It is used for battery voltage detection, power detection, battery temperature detection, etc
Real-Time Clock	In the tank
Antenna Interface	Main antenna, diversity antenna, GNSS antenna, Wi-Fi 2.4G/Wi-Fi 5G/BT antenna interface
Physical Characteristics	Size: (40.5±0.15)mm ×(40.5±0.15)mm ×(2.8±0.2)mm Package: LCC + LGA Weight: Approx. 13.0g
Temperature Range	Recommended operating temperature: -20°C ~ +80°C Sorage temperature range: -40°C ~ +90°C
Software Upgrades	Upgrade via USB port
RoHS	All devices are fully EU RoHS compliant

2.3 Functional block diagram

The following diagram shows the H1503BQ functional block diagram.

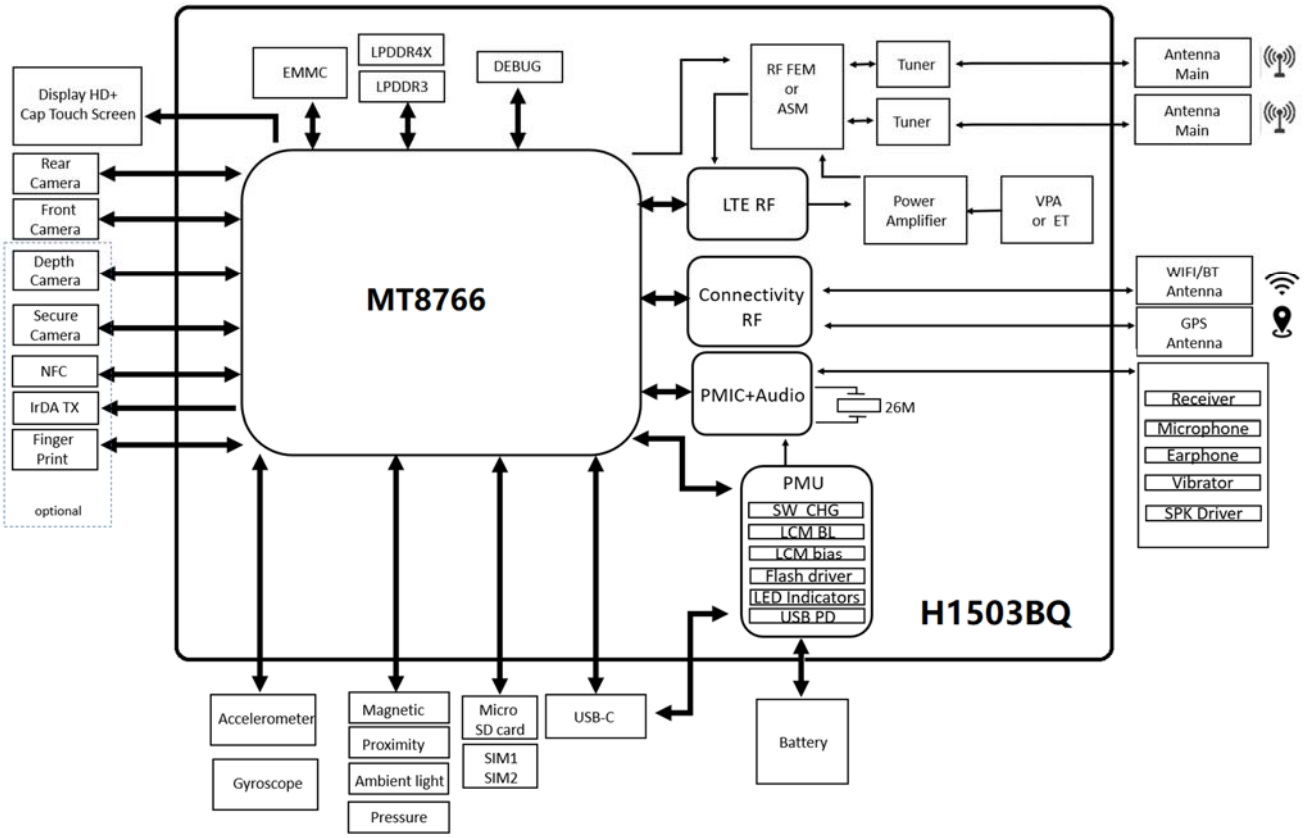

Figure 1 Functional Block Diagram

3 Application Interfaces

3.1 Overview

The H1503BQ module is available in an LCC+LGA package with a total of 275 pins. The following chapters elaborate on the functions of each set of interfaces of the module:

- Power supply
- Power on and off
- VRTC interface
- Charging port
- USB interface
- UART interface
- SIM interface
- SD card interface
- GPIO interface
- I2C interface
- I2S interface
- SPI interface
- ADC interface
- Motor drive interface
- LCM interface
- Touchscreen interface
- Camera interface
- Sensor interface
- Audio interface
- Forced download of the interface
- LED interface

3.2 Pin Assignment

The pinout diagram of the H1503BQ module is as follows:

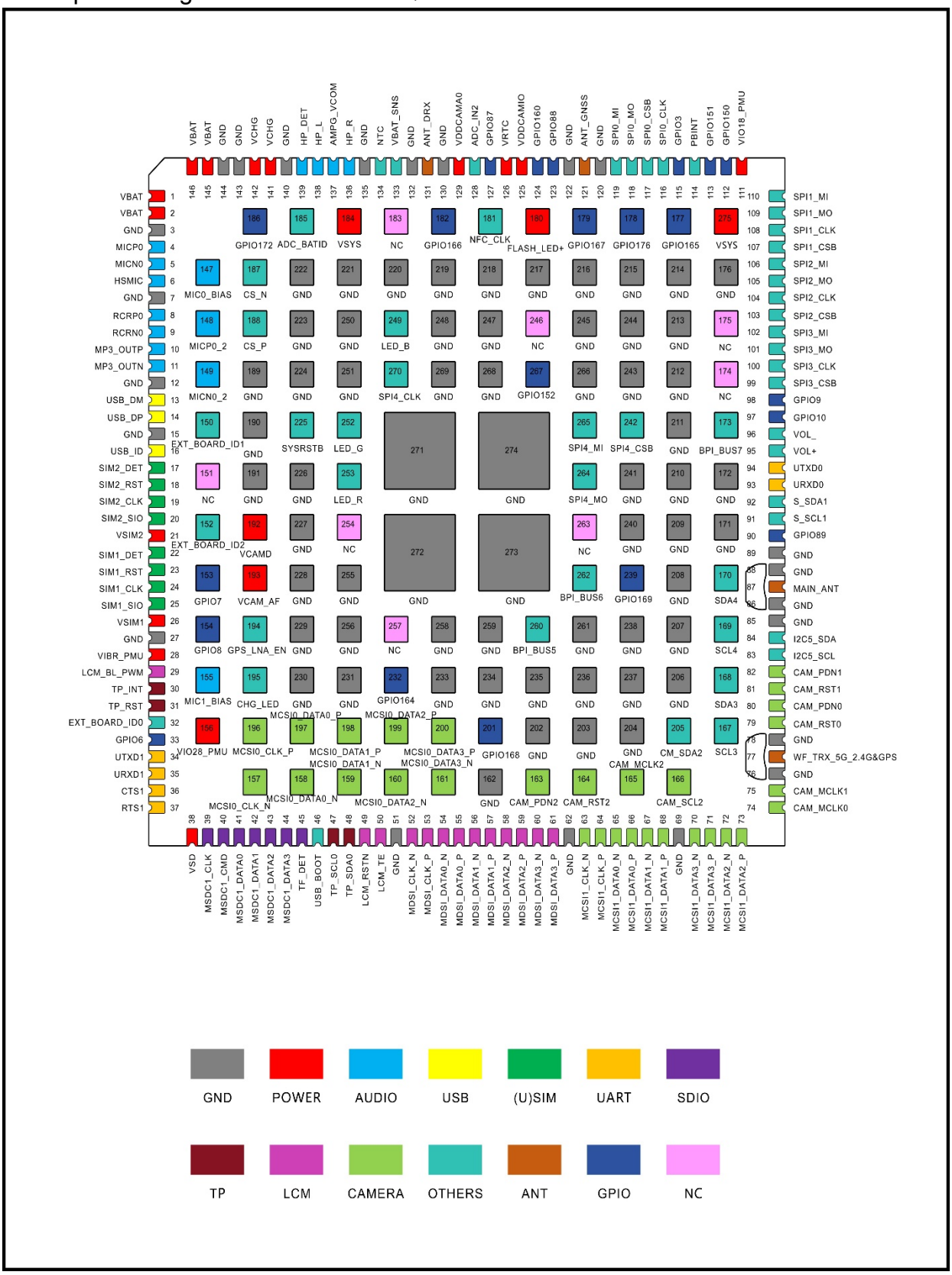

Figure 2 H1503BQ Pinout Diagram (Top View)

3.3 Pin Description

Table 3 I/O Parameter Definition

type	description
IO	Bi-directional ports
DI	Digital inputs
DO	Digital output
PI	Power input
PO	Power output
AI	Analog inputs
AO	Analog output
OD	Open drain

The pin function and electrical characteristics of the H1503BQ are described in the following table:

Table 4 Pin Description

power supply					
Pin Name	**Pin Number**	**I/O**	**Description**	**DC Characteristics**	**Remark**
VBAT	1,2,145,146	PI	Module power supply	Vmax=4.4V Vmin=3.4V Vnorm=3.8V	The power supply must be able to deliver up to 4A , and an external EOS device is recommended
VIO18_PMU	111	PO	System 1.8V I/O power supply	Vnorm=1.8V IOmax=600mA	For the voltage domain of external cameras, LCDs, sensors, and I/O ports, 1.0uF~2.2uF bypass capacitors need to be added when using. The system power cannot be turned off
VIO28_PMU	156	PO	System 2.8V I/O power supply	Vnorm=2.8V IOmax=200mA	To supply power to external sensors and touch screens, 1.0uF~4.7uF bypass capacitors need to be added when used. The system

					power cannot be turned off
VCAM_AVDD	129	PO	Camera analog power supply	Vnorm=2.8V IOmax =200mA	To supply power to the analog voltage part of the camera, 1.0uF ~ 4.7uF bypass capacitor needs to be added when using. If you're not using it, turn it off
VCAM_AF	193	PO	Output 2.8V	Vnorm=2.8V IOmax=400mA	To power the focusing motor of the external camera, 1.0uF ~ 2.2uF bypass capacitors need to be added when using. If you're not using it, turn it off
VCAMD_PMU	192	PO	Digital power supply for the camera	Vnorm=1.2V IOmax=400mA	To supply power to the digital voltage part of the camera, a bypass capacitor of 1.0uF ~ 2.2uF needs to be added when using. If you're not using it, turn it off
VCAM_IOVDD	125	PO	Camera IO power supply	Vnorm=1.8V IOmax=300mA	To supply power to the I/O part of the camera, a bypass capacitor of 1.0uF~2.2uF needs to be added when using. If you're not using it, turn it off
VRTC	126	PIO	RTC clock power supply	Vnorm=2.8V VOmax=2.98V	
GND	3,7,12,15,27,51,62,69,76,78,85,86,88,89,120,122,130,132,135,140,143,144,162,171,172, 176,189~191,202,203,204,206~224,226~231,233~238,240,241,243~245,247,248,250, 251,255,256,258,259,261,266,268,269,271~274				
Audio Interface					
Pin name	**Pin number**	**I/O**	**Description**	**DC Characteristics**	**Remark**
MICBIAS0	147	PO	MIC0, MIC2 bias voltage	VO=0V~2.94V	
MIC0_P	4	AI	The main microphone input is positive		
MIC0_N	5	AI	The main microphone input is negative		
MIC2_P	148	AI	The secondary microphone input is positive		
MIC2_N	149	AI	The negative pole of the secondary microphone input		
EAR_P	8	AO	Differential handset output positive		
EAR_N	9	AO	Differential earpiece outputs a negative pole		
LINEOUT_P	10	AO	Differential line out output positive		

LINEOUT_N	11	AO	Differential line out output negetive		
MICBIAS1	155	PO	Headphone MIC bias voltage	VO=0V~2.94V	
HP_MIC	6	AI	Headphone MIC input		
AU_HPR	136	AO	The right channel of the headphones		
AU_REFN	137	AI	Headset reference ground		If not, it needs to be grounded
AU_HPL	138	AO	Headphone left channel		
HP_DET	139	AI	Headphone insertion detection		
USB Interface					
Pin Name	**Pin Number**	**I/O**	**Description**	**DC Characteristics**	**Remark**
VBUS	141,142	PI	Charging power input; USB/adapter insertion detection	Vmax=14V Vmin=4V Vnorm=5.0V	Test points must be reserved
USB_DM	13	IO	USB 2.0 differential data negative	USB 2.0 compliant specification	A differential impedance of 90Ω is required Test points must be reserved
USB_DP	14	IO	USB 2.0 differential data positive		
USB_ID	16	DI	USB ID detection signal		
(U) SIM Interface					
Pin Name	**Pin Number**	**I/O**	**Description**	**DC Characteristics**	**Remark**
USIM1_VDD	26	PO	(U) SIM1 power supply	Vmax=3V Vnorm=1.8V	Automatic identification of modules: 1.8V or 3V (U)SIM Card
USIM1_DET	22	DI	(U) SIM1 insertion and unplugging detection	VOLmax=0.45V VOHmin=1.35V	If not, suspend
USIM1_RST	23	DO	(U) SIM1 reset signal	VOLmax=0.4V VOHmin=1.62V	
USIM1_CLK	24	DO	(U) SIM1 clock signal	VOLmax=0.4V VOHmin=1.62V	
USIM1_DATA	25	IO	(U) SIM data signal	VILmax=0.27V VIHmin=1.4V VOLmax=0.36V VOHmin=1.4V	
USIM2_VDD	21	PO	(U) SIM2 power supply	Vmax=3V Vnorm=1.8V	模块自动识别 1.8V 或 3V (U)SIM 卡
USIM2_DET	17	DI	(U) SIM2 insertion and unplugging detection	VOLmax=0.45V VOHmin=1.35V	If not, suspend
USIM2_RST	18	DO	(U) SIM2 reset signal	VOLmax=0.4V VOHmin=1.62V	

USIM2_CLK	19	DO	(U) SIM2 clock signal	VOLmax=0.4V VOHmin=1.62V	
USIM2_DATA	20	IO	(U) SIM2 data signal	VILmax=0.27V VIHmin=1.4V VOLmax=0.36V VOHmin=1.4V	
SD Card Interface					
Pin Name	**Pin Number**	**I/O**	**Description**	**DC Characteristics**	**Remark**
SD_CLK	39	DO	SD card high-speed digital clock	VOLmax=0.41V VOHmin=2.1V	
SD_CMD	40	DO	SD card control signal	VILmax=0.85V VIHmin=1.75V VOLmax=0.41V VOHmin=2.1V	
SD_DATA0	41	IO	High-speed bidirectional digital signal	VILmax=0.85V VIHmin=1.75V VOLmax=0.41V VOHmin=2.1V	
SD_DATA1	42	IO			
SD_DATA2	43	IO			
SD_DATA3	44	IO			
SD_DET	45	DI	SD card CPU status detection	VILmax=0.63V VIHmin=1.17V	If not, suspend
SD_VDD	38	PO	SD card power supply	Vnorm=3.0V IOmax=800mA	
Touchscreen Interface					
Pin Name	**Pin Number**	**I/O**	**Description**	**DC Characteristics**	**Remark**
TP_RST	31	DO	Touch screen reset signal	VOLmax=0.45V VOHmin=1.35V	1.8V voltage domain Valid low
TP_INT	30	DI	The touch screen interrupts the signal	VOLmax=0.45V VOHmin=1.35V	1.8V voltage domain
SCL0	47	DO	Touchscreen I2C clock	VOLmax=0.45V VOHmin=1.35V	No external pull-up is required
SDA0	48	IO	Touchscreen I2C data	VOLmax=0.45V VOHmin=1.35V	No external pull-up is required
LCM Interface					
Pin Name	**Pin Number**	**I/O**	**Description**	**DC Characteristics**	**Remark**
DISP_PWM	29	DO	PWM output	VOLmax=0.45V VOHmin=1.35V	Adjust the brightness of the backlight
LCD_RST	49	DO	LCD reset signal	VOLmax=0.45V VOHmin=1.35V	1.8V voltage domain Valid low
DSI_TE	50	DO	LCD tearing effect signal	VOLmax=0.45V VOHmin=1.35V	1.8V voltage domain
DSI_CKP	53	AO	LCD MIPI clock positive		

DSI_CKN	52	AO	LCD MIPI clock negative		
DSI_D0P	55	AO	The LCD MIPI data 0 positive		
DSI_D0N	54	AO	The LCD MIPI data 0 negative		
DSI_D1P	57	AO	LCD MIPI data 1 positive		
DSI_D1N	56	AO	The LCD MIPI data 1 negative		
DSI_D2P	59	AO	The LCD MIPI data positive		
DSI_D2N	58	AO	LCD MIPI data negative 2		
DSI_D3P	61	AO	The LCD MIPI data 3 positive		
DSI_D3N	60	AO	The LCD MIPI data 3 negative		
Camera Interface					
Pin Name	**Pin Number**	**I/O**	**Description**	**DC Characteristics**	**Remark**
CSI0_CLKN	157	AO	MIPI CSI0 clock negative		
CSI0_CLKP	196	AO	MIPI CSI0 clock positive		
CSI0_LN0N	158	AI	MIPI CSI0 data 0 negative		
CSI0_LN0P	197	AI	MIPI CSI0 data 0 positive		
CSI0_LN1N	159	AI	MIPI CSI0 data 1 negative		
CSI0_LN1P	198	AI	MIPI CSI0 data 1 positive		
CSI0_LN2N	160	AI	MIPI CSI0 data 2 negative		
CSI0_LN2P	199	AI	MIPI CSI0 data 2 positive		
CSI0_LN3N	161	AI	MIPI CSI0 data 3 negative		
CSI0_LN3P	200	AI	MIPI CSI0 data 3 positive		
CSI1_CLKN	63	AO	MIPI CSI0 clock negative		
CSI1_CLKP	64	AO	MIPI CSI0 clock positive		
CSI1_LN0N	65	AI	MIPI CSI0 data 0 negative		
CSI1_LN0P	66	AI	MIPI CSI0 data 0 positive		

CSI1_LN1N	67	AI	MIPI CSI0 data 1 negative		
CSI1_LN1P	68	AI	MIPI CSI0 data 1 positive		
CSI1_LN2N	72	AI	MIPI CSI0 data 2 negative		
CSI1_LN2P	73	AI	MIPI CSI0 data 2 positive		
CSI1_LN3N	70	AI	MIPI CSI0 data 3 negative		
CSI1_LN3P	71	AI	MIPI CSI0 data 3 positive		
CAM0_MCLK	74	DO	The camera 0 clock signal	VOLmax=0.45V VOHmin=1.35V	1.8V voltage domain
CAM1_MCLK	75	DO	Camera 1 clock signal	VOLmax=0.45V VOHmin=1.35V	1.8V voltage domain
CAM0_RST	79	DO	Camera 0 reset signal	VOLmax=0.45V VOHmin=1.35V	
CAM0_PDN	80	DO	Camera 1 shut down signal	VOLmax=0.45V VOHmin=1.35V	
CAM1_RST	81	DO	Camera 0 reset signal	VOLmax=0.45V VOHmin=1.35V	
CAM1_PDN	82	DO	Camera 1 shut down signal	VOLmax=0.45V VOHmin=1.35V	
SCL2	166	DO	Camera I2C clock signal	VOLmax=0.45V VOHmin=1.35V	No external pull-up is required
SDA2	205	IO	Camera I2C data signal	VOLmax=0.45V VOHmin=1.35V	No external pull-up is required
Button Interface					
Pin Name	**Pin Number**	**I/O**	**Description**	**DC Characteristics**	**Remark**
PWRKEY	114	DI	Power on and off button	Vmax=0.7*VBAT Vmin=0.3*VBAT	Valid low
VOL+	95	DI	Volume up	VOLmax=0.45V VOHmin=1.35V	If not, suspend
THEFT-	96	DI	Volume reduction and forced downloads	VOLmax=0.45V VOHmin=1.35V	If not, suspend
SYSRSTB	225	DI	Module reset	VOLmax=0.45V VOHmin=1.35V	If not, suspend
UART Interface					
Pin Name	**Pin Number**	**I/O**	**Description**	**DC Characteristics**	**Remark**
UART0_RXD	94	DO	Debug UART send	VOLmax=0.45V VOHmin=1.35V	1.8V voltage domain, If not, it will be suspended
UART0_TXD	93	DI	Debug UART reception	VILmax=0.63V VIHmin=1.17V	
UART1_TXD	34	DO	UART1	VOLmax=0.45V VOHmin=1.35V	1.8V voltage domain, If not, it will be suspended

UART1_RXD	35	DI	UART1 receives	VILmax=0.63V VIHmin=1.17V	
UART1_CTS	36	DO	Clear Send to Module		
UART1_RTS	37	DI	Module request sends		
I2C Interface					
Pin Name	**Pin Number**	**I/O**	**Description**	**DC Characteristics**	**Remark**
SCL1	91	DO	I2C1 serial clock	VOLmax=0.45V VOHmin=1.35V	No external pull-up is required
SDA1	92	IO	I2C1 serial data	VOLmax=0.45V VOHmin=1.35V	No external pull-up is required
SCL2	166	DO	I2C2 serial clock	VOLmax=0.45V VOHmin=1.35V	No external pull-up is required
SDA2	205	IO	I2C2 serial data	VOLmax=0.45V VOHmin=1.35V	No external pull-up is required
SCL3	167	DO	I2C3 serial clock	VOLmax=0.45V VOHmin=1.35V	No external pull-up is required
SDA3	168	IO	I2C3 serial data	VOLmax=0.45V VOHmin=1.35V	No external pull-up is required
SCL4	169	DO	I2C4 serial clock	VOLmax=0.45V VOHmin=1.35V	No external pull-up is required
SDA4	170	IO	I2C4 serial data	VOLmax=0.45V VOHmin=1.35V	No external pull-up is required
SCL5	83	DO	I2C5 serial clock	VOLmax=0.45V VOHmin=1.35V	No external pull-up is required
SDA5	84	IO	I2C5 serial data	VOLmax=0.45V VOHmin=1.35V	No external pull-up is required
SPI Interface					
Pin Name	**Pin Number**	**I/O**	**Description**	**DC Characteristics**	**Remark**
SPI0_CSB	117	DO	Chip selection signal	VOLmax=0.45V VOHmin=1.35V	
SPI0_CLK	116	DO	Clock signals	VOLmax=0.45V VOHmin=1.35V	
SPI0_MO	118	DO	Data output	VOLmax=0.45V VOHmin=1.35V	
SPI0_MI	119	DI	Data input	VILmax=0.63V VIHmin=1.17V	
SPI1_CSB	107	DO	Chip selection signal	VOLmax=0.45V VOHmin=1.35V	Reuse I2S1_BCK
SPI1_CLK	108	DO	Clock signals	VOLmax=0.45V VOHmin=1.35V	Reuse I2S1_DO
SPI1_MO	109	DO	Data output	VOLmax=0.45V VOHmin=1.35V	Reuse I2S1_LRCK
SPI1_MI	110	DI	Data input	VILmax=0.63V VIHmin=1.17V	Reuse I2S1_MCK

SPI2_CSB	103	DO	Chip selection signal	VOLmax=0.45V VOHmin=1.35V	
SPI2_CLK	104	DO	Clock signals	VOLmax=0.45V VOHmin=1.35V	
SPI2_MO	105	DO	Data output	VOLmax=0.45V VOHmin=1.35V	
SPI2_MI	106	DI	Data input	VILmax=0.63V VIHmin=1.17V	
SPI3_CSB	99	DO	Chip selection signal	VOLmax=0.45V VOHmin=1.35V	Reuse I2S2_BCK
SPI3_CLK	100	DO	Clock signals	VOLmax=0.45V VOHmin=1.35V	Reuse I2S2_DO
SPI3_MO	101	DO	Data output	VOLmax=0.45V VOHmin=1.35V	Reuse I2S2_LRCK
SPI3_MI	102	DI	Data input	VILmax=0.63V VIHmin=1.17V	Reuse I2S2_MCK
SPI4_CSB	242	DO	Chip selection signal	VOLmax=0.45V VOHmin=1.35V	
SPI4_CLK	270	DO	Clock signal	VOLmax=0.45V VOHmin=1.35V	
SPI4_MO	264	DO	Data output	VOLmax=0.45V VOHmin=1.35V	
SPI4_MI	265	DI	Data input	VILmax=0.63V VIHmin=1.17V	
Battery Interface					
Pin Name	**Pin Number**	**I/O**	**Description**	**Dc Characteristics**	**Remark**
BAT_P	133	AI	Battery voltage detection		
CS_P	188	AI	Battery Current Detection+		Ground when not in use
CS_N	187	AI	Battery Current Detection-		Ground when not in use
ADC_IN3	185	AI	Battery type detection		General-purpose ADC interface
VBAT_THERM	134	AI	Battery temperature detection		
Antenna Interface					
Pin Name	**Pin Number**	**I/O**	**Description**	**DC Characteristics**	**Remark**
ANT_MAIN	87	IO	Main antenna interface		50Ω characteristic impedance
ANT_DRX	131	AI	LTE diversity antenna interface		50Ω characteristic impedance
ANT_WIFI/BT	77	AIO	Wi-Fi 2.4G/Wi-Fi 5G/BT antenna interface		50Ω characteristic impedance Default WIFI/BT/GNSS 3in1 antenna
ANT_GNSS	121	AI	GPS antenna interface		50Ω characteristic impedance

					Default NC
BPI_BUS5	260	DO	Antenna Tuner switch control		For antenna tuning control only
BPI_BUS6	262	DO	Antenna Tuner switch control		For antenna tuning control only
BPI_BUS7	173	DO	Antenna Tuner switch control		For antenna tuning control only
Motor Drive Interface					
Pin Name	**Pin Number**	**I/O**	**Description**	**DC Characteristics**	**Remark**
VIBR_DRV	28	PO	Vibration motor power output	Vmax=3.3V Vmin=1.2V Vnorm=2.8V Imax=200mA	
Leds Indicate The Interface					
Pin Name	**Pin Number**	**I/O**	**Description**	**DC Characteristics**	**Remark**
CHG_LED	195	AI	Charging indication		Input Current Range: 1mA~6mA
LED_R	252	AI	LED control negative		The detached version is GPIO174
LED_G	253	AI	LED control negative		The detached version is GPIO173
LED_B	249	AI	LED control negative		The detached version is GPIO175
ADC Interface					
Pin Name	**Pin Number**	**I/O**	**Description**	**DC Characteristics**	**Remark**
ADC_IN2	128	AI	ADC analog sampling input		If not, it will be grounded
Other Interfaces					
Pin Name	**Pin Number**	**I/O**	**Description**	**DC Characteristics**	**Remark**
USB_BOOT	46	DI	Force the module into download mode		Enter high to enter upgrade mode
FLASH_LED	180	AO	Flash positive output	Iomax=1A	
NFC_CLK	181	DO	NFC clock		
GPIO_GPS _LNA_EN	194	DO	External GPS LNA enables control		
GPIO Interface					
Pin Name	**Pin Number**	**I/O**	**Description**	**DC Characteristics**	**Remark**
GPIO6	33	IO	GPIO	VOLmax=0.45V VOHmin=1.35V	Multiplex EINT6

GPIO89	90	IO	GPIO	VOLmax=0.45V VOHmin=1.35V	
GPIO10	97	IO	GPIO	VOLmax=0.45V VOHmin=1.35V	Multiplex EINT10
GPIO9	98	IO	GPIO	VOLmax=0.45V VOHmin=1.35V	Multiplex EINT9
GPIO150	112	IO	GPIO	VOLmax=0.45V VOHmin=1.35V	
GPIO151	113	IO	GPIO	VOLmax=0.45V VOHmin=1.35V	
GPIO3	115	IO	GPIO	VOLmax=0.45V VOHmin=1.35V	Multiplex EINT3
GPIO88	123	IO	GPIO	VOLmax=0.45V VOHmin=1.35V	
GPIO160	124	IO	GPIO	VOLmax=0.45V VOHmin=1.35V	
GPIO87	127	IO	GPIO	VOLmax=0.45V VOHmin=1.35V	
GPIO7	153	IO	GPIO	VOLmax=0.45V VOHmin=1.35V	Multiplex EINT7
GPIO8	154	IO	GPIO	VOLmax=0.45V VOHmin=1.35V	Multiplex EINT8
GPIO107	163	IO	GPIO	VOLmax=0.45V VOHmin=1.35V	
GPIO109	164	IO	GPIO	VOLmax=0.45V VOHmin=1.35V	
GPIO108	165	IO	GPIO	VOLmax=0.45V VOHmin=1.35V	
GPIO165	177	IO	GPIO	VOLmax=0.45V VOHmin=1.35V	
GPIO176	178	IO	GPIO	VOLmax=0.45V VOHmin=1.35V	
GPIO167	179	IO	GPIO	VOLmax=0.45V VOHmin=1.35V	
GPIO166	182	PO	GPIO	VOLmax=0.45V VOHmin=1.35V	
GPIO172	186	IO	GPIO	VOLmax=0.45V VOHmin=1.35V	
GPIO168	201	DO	GPIO	VOLmax=0.45V VOHmin=1.35V	
GPIO164	232	DO	GPIO	VOLmax=0.45V VOHmin=1.35V	
GPIO169	239	DI	GPIO	VOLmax=0.45V VOHmin=1.35V	
GPIO152	267	IO	GPIO	VOLmax=0.45V VOHmin=1.35V	

3.4 Power Supply

H1503BQ provides 4 VBAT pins for connecting an external battery to power the module. The VBAT supply voltage input range is 34V~4.4V, the recommended value is 3.8V. The performance of the VBAT power supply, such as load capacity, ripple size, etc., will directly affect the performance and stability of the module. In extreme cases, the current consumption of the module may reach an instantaneous peak of about 4A, and if the power supply capacity is insufficient, the voltage will drop. If the voltage drops to 3If the module is less than 1V, it will cause the module to power off and shut down.

In order to ensure that the VBAT voltage does not drop below 3.1V, it is recommended to connect a 22uF (0603 package) and 2.2UF (0402 package) and 100nF and 33pF (0201 package) filter capacitors, and it is recommended that the PCB traces of VBAT be as short and wide as possible, and the width of VBAT traces is not less than 3mm; And the longer the trace, the wider the line width; The ground plane of the power supply section should be as complete as possible.

In order to suppress the impact of power supply fluctuations and ensure the stability of the output power supply, it is recommended to add a surge tube at the front end of the power supply and place it close to the VBAT of the module to play the role of surge protection.

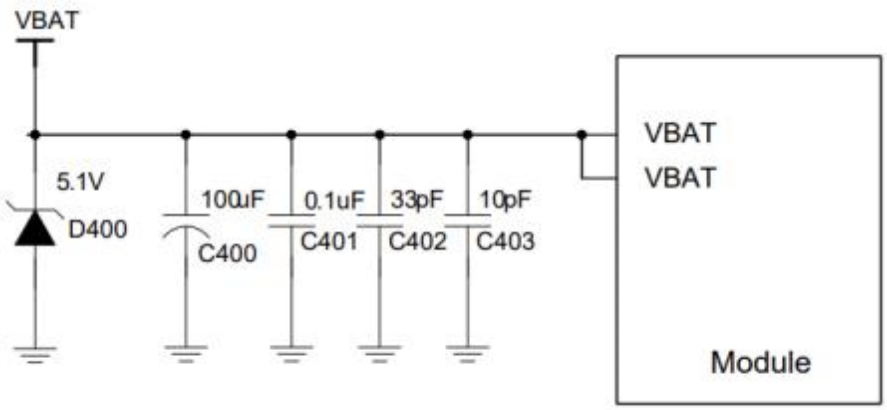

Figure 3 VBAT Input Reference Circuit

Remark

1. When the module cannot be shut down normally due to abnormality, it is recommended to disconnect the power supply to turn off the module, and then power on again to restart the module.

2. When the power drops to 0%, the system will trigger an automatic shutdown; Therefore, the power supply design should be consistent with the drive configuration of the fuel gauge.

3.5 Power On and Off

3.5.1 Power On

After the VBAT is powered on, the module can be powered on by pulling the PWRKEY down for at least 2s.

N TVS is need to be placed near the button for ESD protection and connect a 1K resistor in series to the PWRKEY. The reference circuit is as follows:

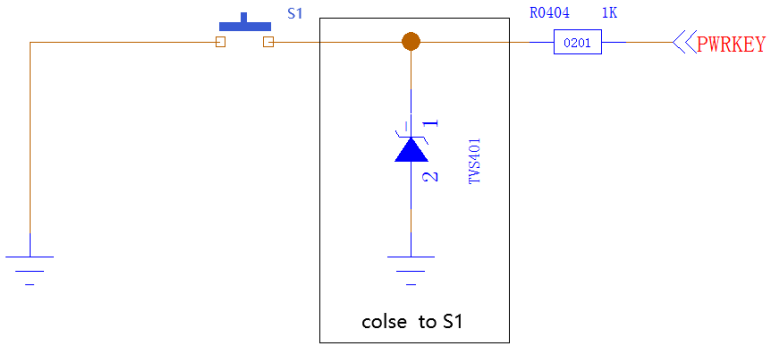

Figure 4 The Open-Set Drive Refers To The Boot Circuit

The boot sequence diagram is shown in the following figure:

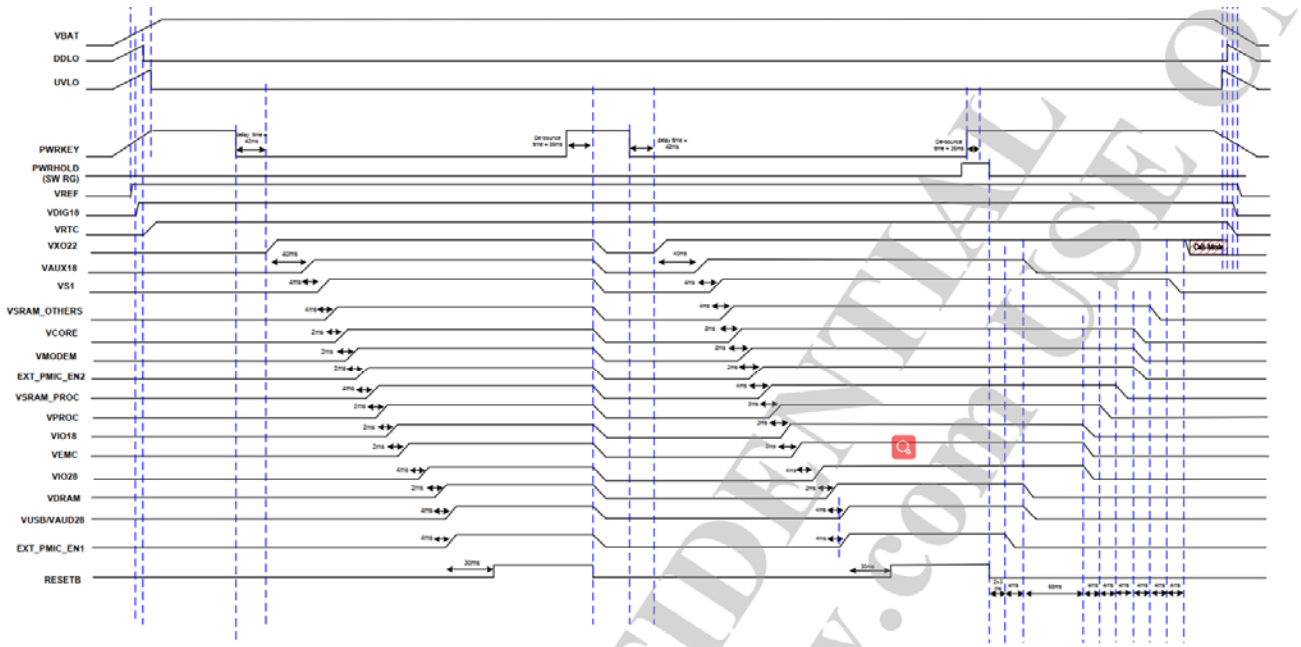

Note: Those timings are typical values; timing variation is +-20%(Charger-plug-in/out related delay timing variation is +-40%).

Figure 5 Boot Sequence Diagram

3.5.2 Power Off

Module shutdown can be achieved by pulling the PWRKEY down for at least 1 second. After the module detects the shutdown action, a prompt window will pop up on the screen to confirm whether to continue the shutdown action.

It is also possible to force a shutdown by pulling down the PWRKEY for a long time (minimum 8s). The forced shutdown sequence diagram is shown below

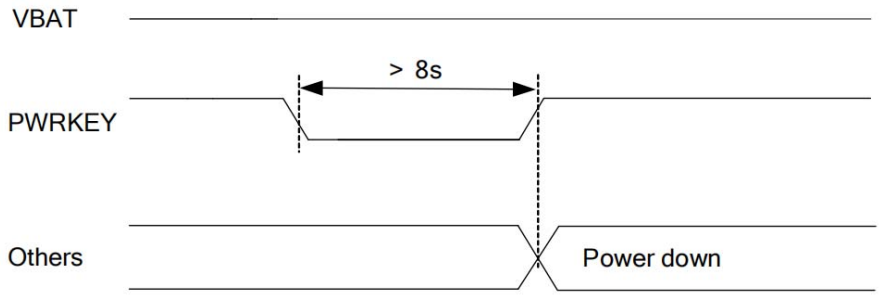

Figure 6 Sequence Diagram of Forced Shutdown

3.6 VRTC Interface

VRTC is the external power pin of the RTC inside the module. When the VBAT is disconnected and the user needs to save the real-time clock, the VRTC pin cannot be left empty and can be powered by connecting an external battery to the VRTC pin. When the RTC power supply is powered by an external battery, the reference circuit is as follows:

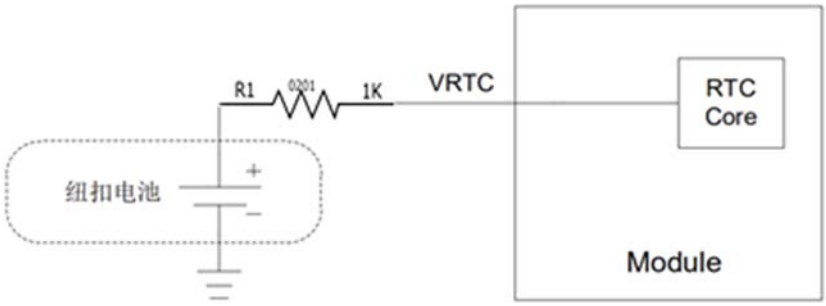

Figure 7 A Rechargeable Coin Cell Battery Powers The RTC

If the RTC fails, the module can be time-synchronized over the network after powering on.

- The input voltage range of VRTC power supply is 0V~2.98V2.8V typical.
- When powered by VBAT, the RTC error is 50ppm. When VRTC is powered, the RTC error is 200ppm.

- When an external rechargeable coin cell battery is required, the ESR of the coin cell battery must be less than 2K. Recommend the MS621FE FL11E by SEIKO.

3.7 Power Output

H1503BQ Multiple power outputs for peripheral circuitry.

Table 5 Power Supply Description

Power Supply					
Pin Name	**Pin Number**	**I/O**	**Description**	**DC Characteristics**	**Remark**
VBAT	1,2,145,146	PI	Module power supply	Vmax=4.4V Vmin=3.4V Vnorm=3.8V	The power supply must be able to deliver up to 4A , and an external EOS device is recommended
VIO18_PMU	111	PO	System 1.8V I/O power supply	Vnorm=1.8V IOmax=600mA	For the voltage domain of external cameras, LCDs, sensors, and I/O ports, 1.0uF~2.2uF bypass capacitors need to be added when using. The system power cannot be turned off
VIO28_PMU	156	PO	System 2.8V I/O power supply	Vnorm=2.8V IOmax=200mA	To supply power to external sensors and touch screens, 1.0uF~4.7uF bypass capacitors need to be added when used. The system power cannot be turned off
VCAM_AVDD	129	PO	Camera analog power supply	Vnorm=2.8V IOmax =200mA	To supply power to the analog voltage part of the camera, 1.0uF ~ 4.7uF bypass capacitor needs to be added when using. If you're not using it, turn it off
VCAM_AF	193	PO	Output 2.8V	Vnorm=2.8V IOmax=400mA	To power the focusing motor of the external camera, 1.0uF ~ 2.2uF bypass capacitors need to be added when using. If you're not using it, turn it off
VCAMD_PMU	192	PO	Digital power supply for the camera	Vnorm=1.2V IOmax=400mA	To supply power to the digital voltage part of the camera, a bypass capacitor of 1.0uF ~ 2.2uF needs to be added when using. If

					you're not using it, turn it off
VCAM_IOVDD	125	PO	Camera IO power supply	Vnorm=1.8V IOmax=300mA	To supply power to the I/O part of the camera, a bypass capacitor of 1.0uF~2.2uF needs to be added when using. If you're not using it, turn it off
KINDERGARTEN	126	PIO	RTC clock power supply	Vnorm=2.8V VOmax=2.98V	
USIM1_VDD	26	PO	(U) SIM1 power supply	Vmax=3V Vnorm=1.8V	The module automatically recognizes the 1.8V or 3V (U) SIM card
USIM2_VDD	21	PO	(U) SIM2 power supply	Vmax=3V Vnorm=1.8V	The module automatically recognizes the 1.8V or 3V (U) SIM card
SD_VDD	38	PO	SD card power supply	Vnorm=3.0V IOmax=800mA	
VIBR_DRV	28	PO	Vibration motor power output	Vmax=3.3V Vmin=1.2V Vnorm=2.8V Imax=200mA	

3.8 Charging and battery management

The H1503BQ module features programmable switch-mode lithium battery charging, capable of charging single lithium and polymer batteries. The charging process includes trickle charging, pre-charging, constant current charging, constant voltage charging and other states.

● Trickle charging: When the battery voltage is lower than 2.0V, the system is in trickle charging mode, and the charging current is 100mA, and the current and voltage cannot be modified by programming in this state.

● Pre-charge: When the battery voltage is between 2.0V~3.5V (programmable cut-off voltage range: 2.0V~3.5V, default 3.0V), module pre-charge mode, the default charging current is 150mA (programmable range is charging current: 100mA~850mA, default 150mA).

● Constant current charging: When the battery voltage is between the pre-charge cut-off voltage and 4.35V (the programmable range of the constant current charge cut-off voltage: 3.6V~4.7V, the default is 4.35V), the module enters the constant current charging mode, and the charging current software can be set to 500mA~5000mA (the default setting of the software: USB charging current is 500mA, adapter charging current is 2A).

● Constant Voltage Charging: Constant Voltage Charging: When the battery voltage is greater than or equal to the constant current charging cut-off voltage (default 4.)35V), start

constant voltage charging, charging at this time. The current gradually decreases, and when the charging current decreases to the charging cut-off current (the programmable range of the charging cut-off current: 100mA~850mA, the default is 250mA), the charging stops.

● Full charge and recharge: When the battery is fully charged and stops charging, and the battery voltage is lower than the constant current charge cut-off voltage - recovery charge voltage (recovery charge voltage programmable range: 100mV~400mV, the default is 100mV), the system returns to constant current charging mode.

If the product needs to support other charging functions, a charging circuit needs to be built on the bottom plate.

Table 6 Charging Interface Pin Definition

Battery Interface					
Pin Name	**Pin Number**	**I/O**	**Description**	**DC Characteristics**	**Remark**
VBUS	141,142	PI	Charging power input; USB/adapter insertion detection	Vmax=14V Vmin=4V Vnorm=5.0V	Test points must be reserved
VBAT	1,2,145,146	PI	Module power supply	Vmax=4.4V Vmin=3.4V Vnorm=3.8V	The power supply must be able to deliver up to 4A , and an external EOS device is recommended
BAT_P	133	AI	Battery voltage detection		
CS_P	188	AI	Battery Current Detection+		Ground when not in use
CS_N	187	AI	Battery Current Detection-		Ground when not in use
VBAT_THERM	134	AI	Battery temperature detection		

H1503BQ module has battery temperature detection function. The implementation of this function requires a thermistor to be integrated into the battery (NTC with 10K 1% and B constant of 3380K is selected by default, SUNLORD's SDNT1005X103F3380FTF is recommended), and the thermistor needs to be connected to the NTC pin. If the NTC pin is not connected, it will cause problems such as not turning on, the battery not charging, and the battery level display incorrectly. The schematic diagram of the battery charging connection is shown below:

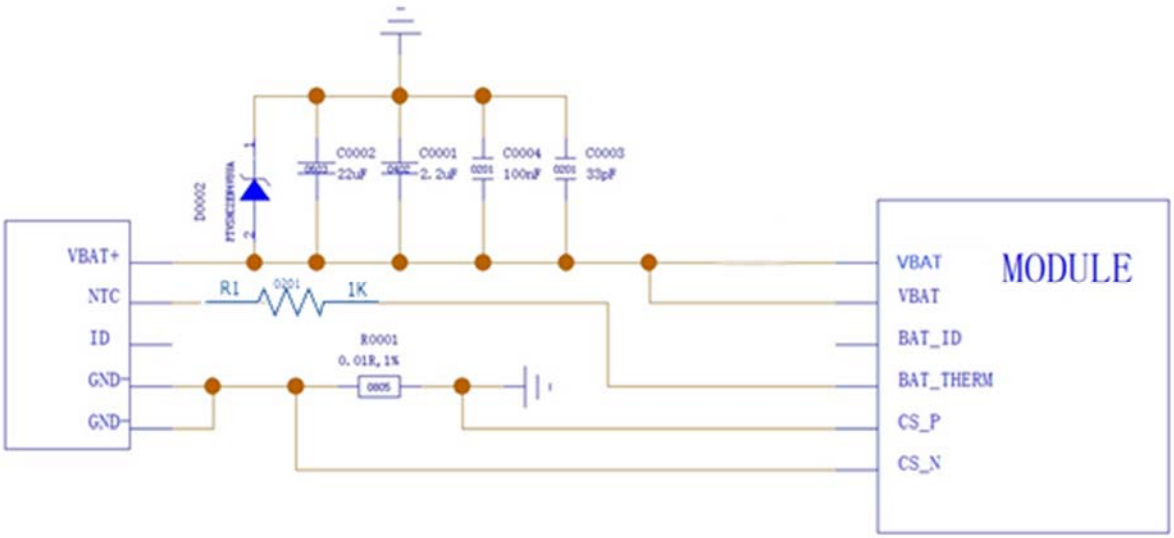

Figure 8 Schematic Diagram Of Battery Charging Connection

H1503BQ module has Fuel Gauge function, and It can accurately estimate the real-time battery charge, which not only protects the battery from over-discharge, but also allows the user to know exactly how much power is left to estimate how long it can be used, and save important data in time.

Mobile devices such as handheld devices and handheld POS machines are battery-powered. For different types of batteries, it is necessary to modify the charge and discharge curves of the battery in the software to achieve the best application effect.

If the customer is using a battery that does not have a thermistor, or if the customer is using a power adapter to power the module, only VBAT and GND need to be connected. In this case, in order to prevent the system from misjudging that the battery does not exist and cannot be turned on, the customer should connect the NTC pin to GND through a 10KΩ resistor. The VBAT_SNS pins must be connected properly, otherwise the normal use of the module will be affected. CS_P and CS_N are used to detect battery charge and discharge currents, and the internal current detection mechanism is currently used by default.

3.9 USB Interface

H1503BQ provides a USB port that complies with the USB 2.0 specification and supports up to 480Mbps. The USB interface can be used for AT instruction transfer, data transfer, software debugging and software upgrade.

The following table shows the pin definitions for the USB interface:

Table 7 USB Interface Pin Definition

USB Interface					
Pin Name	**Pin Number**	**I/O**	**Description**	**DC Characteristics**	**Remark**
VBUS	141,142	PI	Charging power input USB/adapter insertion detection	Vmax=14V Vmin=4V Vnorm=5.0V	Test points must be reserved
USB_DM	13	IO	USB 2.0 differential data negative	USB 2.0 compliant specification	Require a differential impedance of 90Ω Test points must be reserved
USB_DP	14	IO	USB 2.0 differential data positive	USB 2.0 compliant	Require a differential impedance of 90Ω
USB_ID	16	DI	USB ID detection signal		

The USB_VBUS serves as the power input for USB or adapter charging, allowing the battery to be charged through the charging circuit on the motherboard, and it can also be used for USB insertion detection. The input voltage range for the power supply is 4.0V to 14.0V, with a recommended value of 5.0V. Additionally, in the Micro-USB scheme, OTG devices differentiate using the USB_ID pin. When the USB_ID is floating (default is high level), the H1503BQ operates in USB Device mode. When the USB_ID is grounded, the H1503BQ operates in USB HOST mode. If a Type-C interface is required, the user needs to add a CC protocol chip on the motherboard.

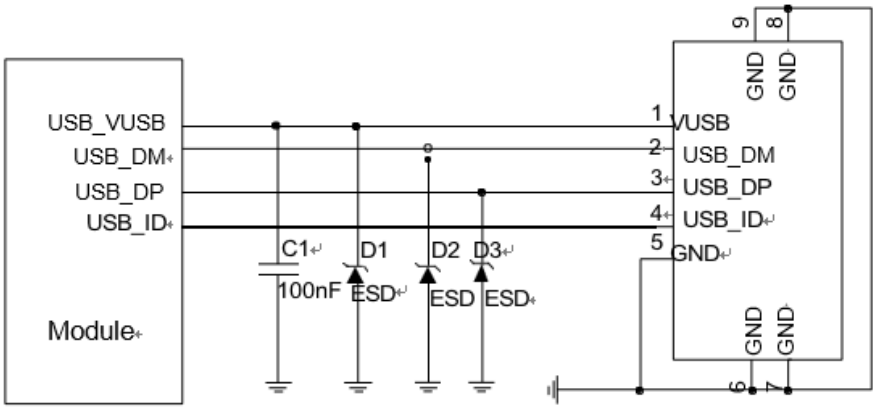

Figure 9 Mirco-USB Interface Reference Design

Figure 10 USB Type-C Reference Design

In the circuit design of the USB interface, in order to ensure the performance of the USB, the following design principles are recommended in the circuit design:

- Envelope processing is required around the USB data cable, using a 90Ω impedance differential line.
- Reserve ESD protection devices near the USB interface, and place the ESD devices as close to the USB interface as possible. USB 2.0 ESD protection devices must not exceed 2pF in parasitic capacitance.
- Do not run the USB cable under crystal oscillators, oscillators, magnetic devices, and RF signals. It is recommended to use inner layers and three-dimensional floors.

Layout cabling requirements: USB 2.0 differential signal cables must be equal in length, the total length difference of differential signal cables must not exceed 8 inches, and there can only be two vias/layer variations at most.

Table 8 The Length Of The USB Trace Inside The Module

Pin Number	Signal	Length (mm)	Length Difference (mm)
13	USB_DM	23.24696	0.15025
14	USB_DP	23.39721	

3.10 UART Interface

The H1503BQ module provides the following 2 sets of UART interfaces:

- UART0: 2-wire serial port, used for debugging by default.

- UART1: 4-wire serial port.

UART interface pins are defined in the following table:

Table 9 UART interface pin definition

UART interface					
Pin name	**Pin number**	**I/O**	**description**	**DC characteristics**	**remark**
UART0_RXD	94	DO	Debug UART send	VOLmax=0.45V VOHmin=1.35V	1.8V voltage domain, If not, suspend 1.8V voltage domain, If not, suspend
UART0_TXD	93	DI	Debug UART receive	VILmax=0.63V VIHmin=1.17V	
UART1_TXD	34	DO	UART1 send	VOLmax=0.45V VOHmin=1.35V	
UART1_RXD	35	DI	UART1 receive	VILmax=0.63V VIHmin=1.17V	
UART1_CTS	36	DO	Clear Send to Module		
UART1_RTS	37	DI	Module request send		

UART1 is a 4-wire serial port with a serial voltage range of 1.8V. When communicating with a 3.3V serial port, a level shifting chip needs to be added in the middle. The corresponding reference design is shown in the following figure:

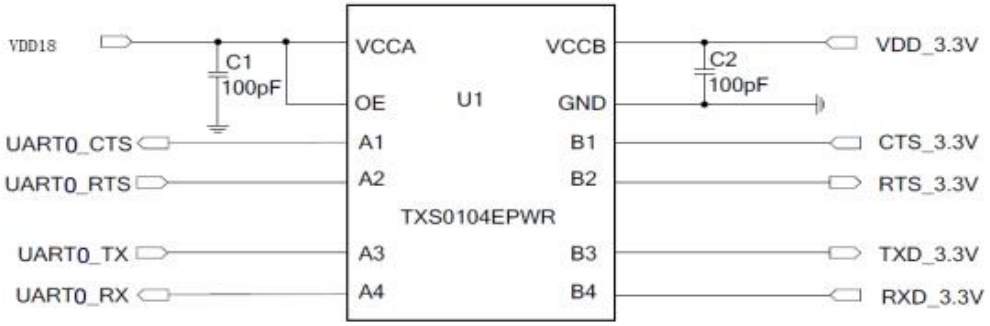

11 Level Translation Reference Circuit (UART1)

3.11 SIM Interface

H1503BQ There are two SIM ports, which support dual SIM dual standby function (the software supports it by default).

Table 10 SIM Interface Pin Definition

UART Interface					
Pin Name	**Pin Number**	**I/O**	**Description**	**DC Characteristics**	**Remark**
USIM1_VDD	26	PO	(U) SIM1 power supply	Vmax=3V Vnorm=1.8V	The module automatically recognizes the 1.8V or 3V (U) SIM card
USIM1_DET	22	DI	(U) SIM1 insertion and unplugging detection	VOLmax=0.45V VOHmin=1.35V	If not, suspend
USIM1_RST	23	DO	(U) SIM1 reset signal	VOLmax=0.4V VOHmin=1.62V	
USIM1_CLK	24	DO	(U) SIM1 clock signal	VOLmax=0.4V VOHmin=1.62V	
USIM1_DATA	25	IO	(U) SIM data signal	VILmax=0.27V VIHmin=1.4V VOLmax=0.36V VOHmin=1.4V	
USIM2_VDD	21	PO	(U) SIM2 power supply	Vmax=3V Vnorm=1.8V	The module automatically recognizes the 1.8V or 3V (U) SIM card
USIM2_DET	17	DI	(U) SIM2 insertion and unplugging detection	VOLmax=0.45V VOHmin=1.35V	If not, suspend
USIM2_RST	18	DO	(U) SIM2 reset signal	VOLmax=0.4V VOHmin=1.62V	
USIM2_CLK	19	DO	(U) SIM2 clock signal	VOLmax=0.4V VOHmin=1.62V	
USIM2_DATA	20	IO	(U) SIM2 data signal	VILmax=0.27V VIHmin=1.4V VOLmax=0.36V VOHmin=1.4V	

Through the USIM1_DET pin, the H1503BQ supports SIM card hot-swap function (off by default, can be turned on by software). The reference circuit for the 8-pin SIM interface is as follows:

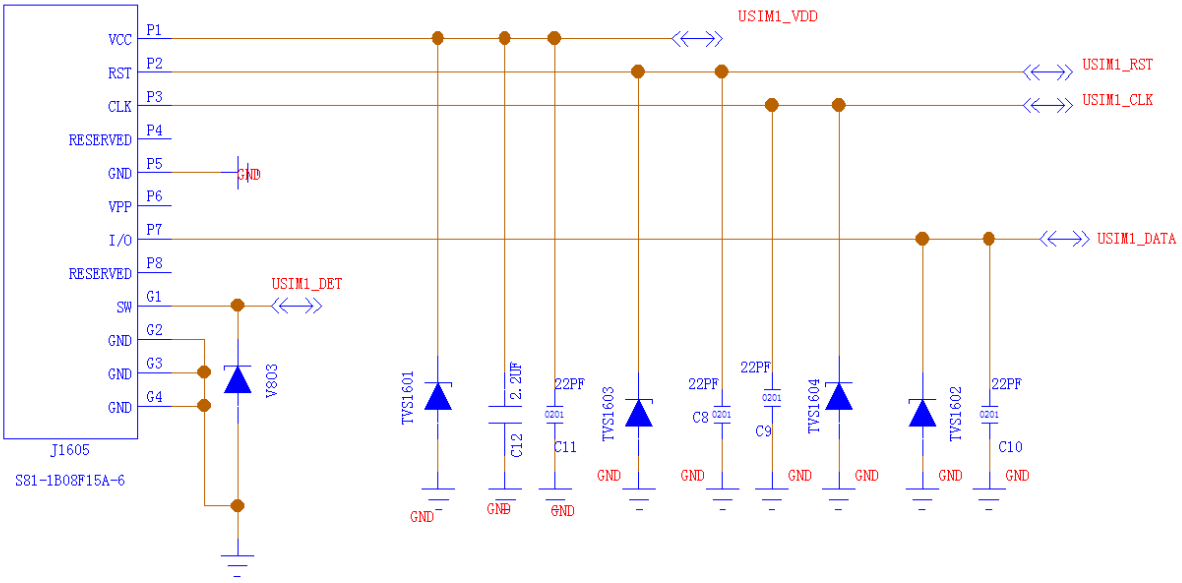

12 8-pin SIM Reference Circuit

Remark

If it is not necessary to support SIM card hot swapping, the USIM1_DET in the reference circuit can be floated. The reference circuit of SIM2 is also the same as that of SIM1.

In the circuit design of SIM interface, in order to ensure the good performance and reliability of the SIM card, the following principles are recommended to be followed in the circuit design:

- The SIM card signal line is far away from the RF line and the VBAT power line.
- Hold the USIM_VDD power bypass capacitor close to the SIM card holder.
- In order to prevent crosstalk between USIM_CLK signals and USIM_DATA signals, the two wires should not be too close to each other, and grounding shielding should be added between the two wires.
- In order to ensure good ESD performance, it is recommended to add a TVS tube to the pins of the SIM card, and the parasitic capacitance of the selected TVS tube is not more than 50pF; The peripheral components of the SIM card should be as close to the SIM card holder as possible.
- 22pF capacitors are placed in parallel on USIM_DATA, USIM_VDD, USIM_CLK, and USIM_RST lines to filter out RF interference and placed close to the SIM card deck.

3.12 SD Card Interface

The module's SD card interface supports the SD 3.0 protocol. The pins of the interface

are defined as follows:

Table 11 SD Card Interface Pin Definition

Uart Interface					
Pin Name	**Pin Number**	**I/O**	**Description**	**Dc Characteristics**	**Remark**
SD_CLK	39	DO	SD card high-speed digital clock	VOLmax=0.41V VOHmin=2.1V	
SD_CMD	40	DO	SD card control signal	VILmax=0.85V VIHmin=1.75V VOLmax=0.41V VOHmin=2.1V	
SD_DATA0	41	IO	High-speed bidirectional digital signal	VILmax=0.85V VIHmin=1.75V VOLmax=0.41V VOHmin=2.1V	
SD_DATA1	42	IO			
SD_DATA2	43	IO			
SD_DATA3	44	IO			
SD_DET	45	DI	SD card CPU status detection	VILmax=0.63V VIHmin=1.17V	If not, suspend
SD_VDD	38	PO	SD card power supply	Vnorm=3.0V IOmax=800mA	

The reference circuit for the SD card interface is as follows:

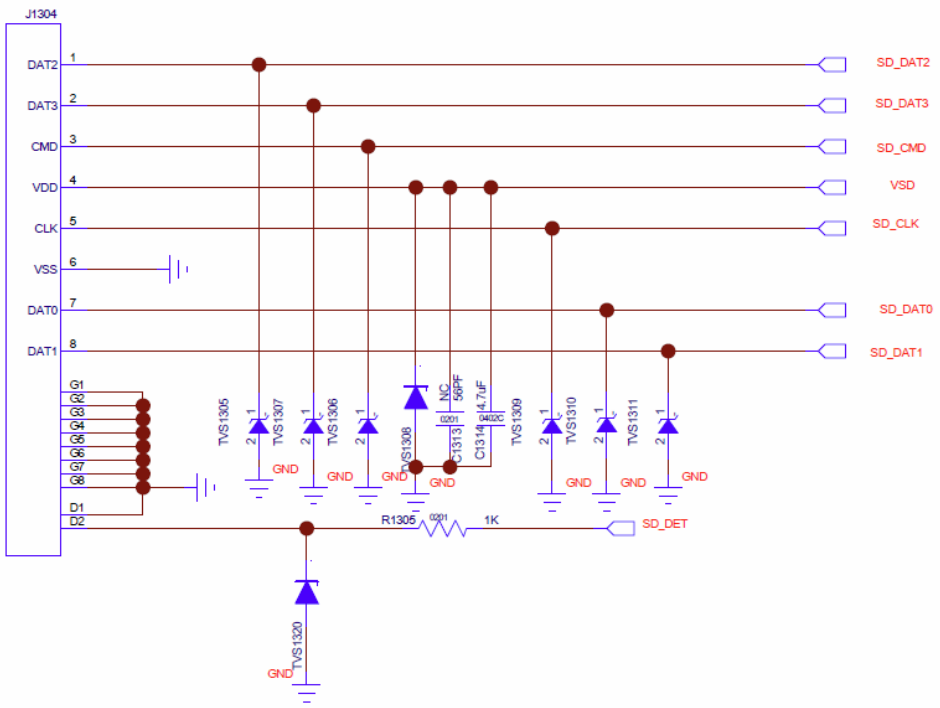

Figure 13 Refer To The Circuit Diagram For The SD Card Interface

Remark:

SD_VDD is an SD card peripheral power supply capable of delivering up to approximately 800mA; Due to the large power supply current, it is recommended that the trace width is more than 0.5mm; In order to ensure the stability of the supply current, 4.7uF and 56pF capacitors need to be connected in parallel on the SD card deck side.

CMD, CLK, DATA0, DATA1, DATA2, and DATA3 are all high-speed signal lines, and these signal lines should not be crossed with other traces during the PCB design process, and the traces should be placed in the inner layer as much as possible. CLK, CMD, DATA0, DATA1, DATA2, and DATA3 traces are recommended to be of equal length.

Layout line length requirements:

- CMD/CLK needs to be grounded to reduce interference.
- The total length of the cable shall not exceed 101.6mm. When the trace length is L, 50.8mm<L<101.6mm, the damping resistor needs to be reserved.
- The length difference of CMD, DATA, CLK traces cannot exceed 7.62mm.

Table 12 The Length Of The SDIO Trace Inside The Module

Pin Number	Signal	Length (mm)	Remark
39	SD_CLK	46.50173	

40	SD_CMD	44.62509	
41	SD_DATA0	44.91917	
42	SD_DATA1	44.85304	
43	SD_DATA2	42.20130	
44	SD_DATA3	42.09036	

3.13 GPIO Interface

H1503BQ has a rich GPIO interface with an interface voltage range of 1.8V and the pins are defined as follows:

Table 13 List of GPIO Interfaces

Pin Name	Pin Number	I/O	Description	DC Characteristics	Remark
GPIO6	33	IO	GPIO	VOLmax=0.45V VOHmin=1.35V	Multiplex EINT6
GPIO89	90	IO	GPIO	VOLmax=0.45V VOHmin=1.35V	
GPIO10	97	IO	GPIO	VOLmax=0.45V VOHmin=1.35V	Multiplex EINT10
GPIO9	98	IO	GPIO	VOLmax=0.45V VOHmin=1.35V	Multiplex EINT9
GPIO150	112	IO	GPIO	VOLmax=0.45V VOHmin=1.35V	
GPIO151	113	IO	GPIO	VOLmax=0.45V VOHmin=1.35V	
GPIO3	115	IO	GPIO	VOLmax=0.45V VOHmin=1.35V	Multiplex EINT3
GPIO88	123	IO	GPIO	VOLmax=0.45V VOHmin=1.35V	
GPIO160	124	IO	GPIO	VOLmax=0.45V VOHmin=1.35V	
GPIO87	127	IO	GPIO	VOLmax=0.45V VOHmin=1.35V	
GPIO7	153	IO	GPIO	VOLmax=0.45V VOHmin=1.35V	Multiplex EINT7
GPIO8	154	IO	GPIO	VOLmax=0.45V VOHmin=1.35V	Multiplex EINT8
GPIO107	163	IO	GPIO	VOLmax=0.45V VOHmin=1.35V	

GPIO109	164	IO	GPIO	VOLmax=0.45V VOHmin=1.35V	
GPIO108	165	IO	GPIO	VOLmax=0.45V VOHmin=1.35V	
GPIO165	177	IO	GPIO	VOLmax=0.45V VOHmin=1.35V	
GPIO176	178	IO	GPIO	VOLmax=0.45V VOHmin=1.35V	
GPIO167	179	IO	GPIO	VOLmax=0.45V VOHmin=1.35V	
GPIO166	182	PO	GPIO	VOLmax=0.45V VOHmin=1.35V	
GPIO172	186	IO	GPIO	VOLmax=0.45V VOHmin=1.35V	
GPIO168	201	DO	GPIO	VOLmax=0.45V VOHmin=1.35V	
GPIO164	232	DO	GPIO	VOLmax=0.45V VOHmin=1.35V	
GPIO169	239	DI	GPIO	VOLmax=0.45V VOHmin=1.35V	
GPIO152	267	IO	GPIO	VOLmax=0.45V VOHmin=1.35V	

3.14 I2C Interface

H1503BQ 7 sets of I2C interfaces are available. The interface reference voltage domain is 1.8V. Only master mode is supported. It can support various sensors using I2C communication, such as acceleration, gyroscope, direction, light, temperature, pressure sensors, etc.

Table 14 I2C Interface Pin Definition

Pin Name	Pin Number	I/O	Description	Dc Characteristics	Remark
SCL1	91	DO	I2C1 serial clock	VOLmax=0.45V VOHmin=1.35V	No external pull-up is required
SDA1	92	IO	I2C1 serial data	VOLmax=0.45V VOHmin=1.35V	No external pull-up is required
SCL2	166	DO	I2C2 serial clock	VOLmax=0.45V VOHmin=1.35V	No external pull-up is required
SDA2	205	IO	I2C2 serial data	VOLmax=0.45V VOHmin=1.35V	No external pull-up is required
SCL3	167	DO	I2C3 serial clock	VOLmax=0.45V VOHmin=1.35V	No external pull-up is required

SDA3	168	IO	I2C3 serial data	VOLmax=0.45V VOHmin=1.35V	No external pull-up is required
SCL4	169	DO	I2C4 serial clock	VOLmax=0.45V VOHmin=1.35V	No external pull-up is required
SDA4	170	IO	I2C4 serial data	VOLmax=0.45V VOHmin=1.35V	No external pull-up is required
SCL5	83	DO	I2C5 serial clock	VOLmax=0.45V VOHmin=1.35V	No external pull-up is required
SDA5	84	IO	I2C5 serial data	VOLmax=0.45V VOHmin=1.35V	No external pull-up is required

3.15 SPI Interface

H1503BQ 5 sets of SPI interfaces are open by default, which can be used for fingerprint recognition and other designs.

Table 15 SPI Interface Pin Definition

Pin Name	Pin Number	I/O	Description	Dc Characteristics	Remark
SPI0_CSB	117	DO	Chip selection signal	VOLmax=0.45V VOHmin=1.35V	
SPI0_CLK	116	DO	Clock signals	VOLmax=0.45V VOHmin=1.35V	
SPI0_MO	118	DO	Data output	VOLmax=0.45V VOHmin=1.35V	
SPI0_MI	119	DI	Data Input	VILmax=0.63V VIHmin=1.17V	
SPI1_CSB	107	DO	Chip selection signal	VOLmax=0.45V VOHmin=1.35V	Reuse I2S1_BCK
SPI1_CLK	108	DO	Clock signals	VOLmax=0.45V VOHmin=1.35V	Reuse I2S1_DO
SPI1_MO	109	DO	Data output	VOLmax=0.45V VOHmin=1.35V	Reuse I2S1_LRCK
SPI1_MI	110	DI	Data Input	VILmax=0.63V VIHmin=1.17V	Reuse I2S1_MCK
SPI2_CSB	103	DO	Chip selection signal	VOLmax=0.45V VOHmin=1.35V	
SPI2_CLK	104	DO	Clock signals	VOLmax=0.45V VOHmin=1.35V	
SPI2_MO	105	DO	Data output	VOLmax=0.45V VOHmin=1.35V	
SPI2_MI	106	DI	Data Input	VILmax=0.63V VIHmin=1.17V	
SPI3_CSB	99	DO	Chip selection signal	VOLmax=0.45V VOHmin=1.35V	Reuse I2S2_BCK

SPI3_CLK	100	DO	Clock signals	VOLmax=0.45V VOHmin=1.35V	Reuse I2S2_DO
SPI3_MO	101	DO	Data output	VOLmax=0.45V VOHmin=1.35V	Reuse I2S2_LRCK
SPI3_MI	102	DI	Data input	VILmax=0.63V VIHmin=1.17V	Reuse I2S2_MCK
SPI4_CSB	242	DO	Chip selection signal	VOLmax=0.45V VOHmin=1.35V	
SPI4_CLK	270	DO	Clock signals	VOLmax=0.45V VOHmin=1.35V	
SPI4_MO	264	DO	Data output	VOLmax=0.45V VOHmin=1.35V	
SPI4_MI	265	DI	Data input	VILmax=0.63V VIHmin=1.17V	

3.16 ADC Interface

H1503BQ One ADC channel is provided with the following pin definitions:

Table 16 ADC Interface Pin Definition

ADC Interface				
Pin Name	**Pin Number**	**I/O**	**Description**	**Remark**
ADC_IN2	128	AI	ADC analog sampling input	General-purpose ADC interface

The ADC pins can support up to 12 bit precision resolution.

3.17 Motor Drive Interface

H1503BQ The pins of the motor drive interface are defined as follows:

Table 17 Motor Drive Interface Pin Definition

Motor Drive Interface					
Pin Name	**Pin Number**	**I/O**	**Description**	**DC Characteristics**	**Remark**
VIBR_DRV	28	PO	Vibration motor power output	Vmax=3.3V Vmin=1.2V Vnorm=2.8V Imax=200mA	

The motor is driven by a specialized circuit, and the reference design circuit is as follows:

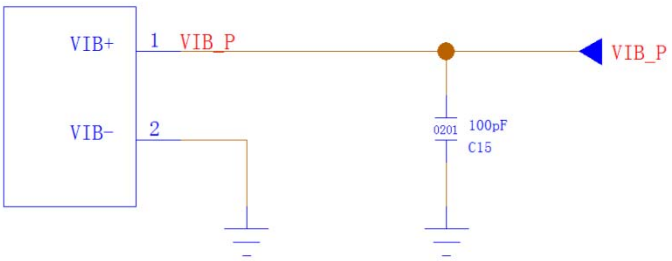

Figure 14 Motor Drive Circuit

3.18 LCM Interface

H1503BQ The video output interface (LCM interface) is based on the MIPI_DSI standard, supporting 4 groups of high-speed differential data transmission, each group up to 1.2Gbps, and supporting HD+1280×800 resolution. The LCM interface pins are defined as follows:

Table 18 LCM Interface Pin Definition

LCM Interface					
Pin Name	**Pin Number**	**I/O**	**Description**	**Dc Characteristics**	**Remark**
DISP_PWM	29	DO	PWM output	VOLmax=0.45V VOHmin=1.35V	Adjust the brightness of the backlight
LCD_RST	49	DO	LCD reset signal	VOLmax=0.45V VOHmin=1.35V	1.8V voltage domain Valid low
DSI_TE	50	DO	LCD tearing effect signal	VOLmax=0.45V VOHmin=1.35V	1.8V voltage domain
DSI_CKP	53	AO	LCD MIPI clock positive		
DSI_CKN	52	AO	LCD MIPI clock negative		
DSI_D0P	55	AO	LCD MIPI data 0 positive		
DSI_D0N	54	AO	LCD MIPI data 0 negative		
DSI_D1P	57	AO	LCD MIPI data 1 positive		
DSI_D1N	56	AO	LCD MIPI data 1 negative		
DSI_D2P	59	AO	LCD MIPI data 2 positive		
DSI_D2N	58	AO	LCD MIPI data 2 negative		

DSI_D3P	61	AO	LCD MIPI data 3 positive		
DSI_D3N	60	AO	LCD MIPI data 3 negative		

The LCM interface reference circuit is as follows:

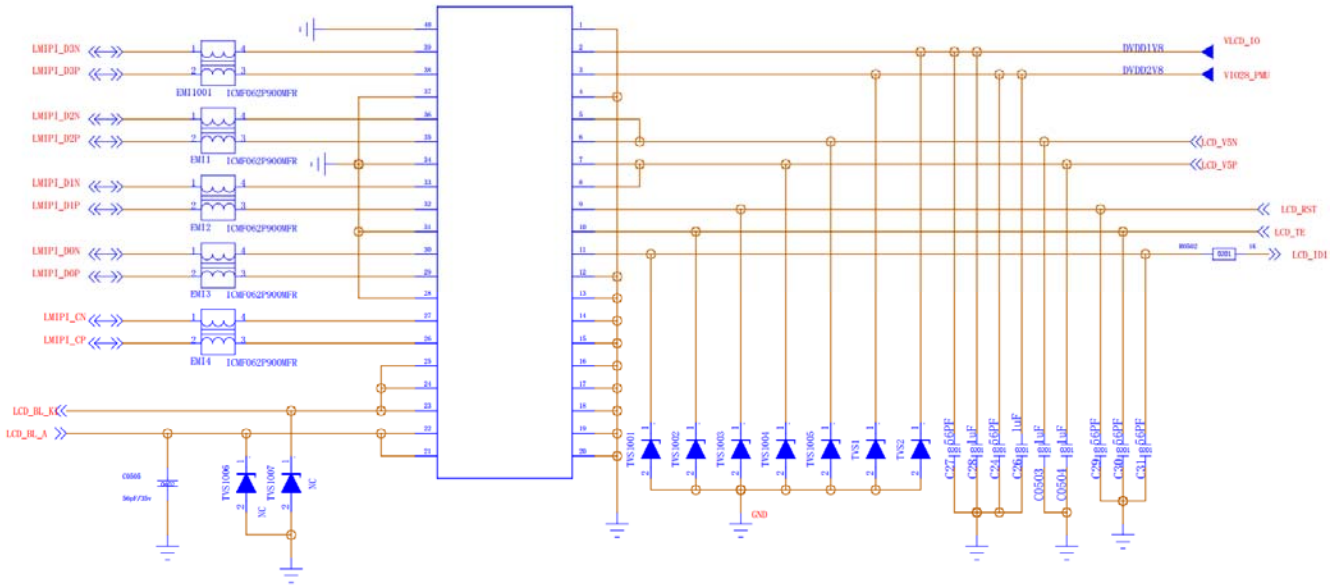

15 LCM Circuit Reference Design

MIPI is a high-speed signal line, and it is recommended to connect the common-mode inductor in series close to the LCM to reduce electromagnetic radiation interference.

When customers need a compatible screen design, the LCD_ID pin of the LCM should be connected to the GPIO port of the module, but it should be noted that the output voltage of the LCD_ID cannot exceed the voltage range of the GPIO pin.

H1503BQ The module does not have a backlight driver output, only a PWM control port is left, and the user needs to add a backlight driver circuit on the backboard to drive the LCM backlight.

3.19 Touchscreen Interface

H1503BQ provides 1 set of I2C interfaces by default for connecting to the touch screen (TP), providing both the required power and interrupt pins. The touch screen interface pins of the module are defined as follows:

Table 19 Touchscreen Interface Pin Definition

Touchscreen Interface

Pin Name	Pin Number	I/O	Description	DC Characteristics	Remark
TP_RST	31	DO	Touch screen reset signal	VOLmax=0.45V VOHmin=1.35V	1.8V voltage domain Valid low
TP_INT	30	DI	The touch screen interruption signal	VOLmax=0.45V VOHmin=1.35V	1.8V voltage domain
SCL0	47	DO	Touchscreen I2C clock	VOLmax=0.45V VOHmin=1.35V	No external pull-up is required
SDA0	48	IO	Touchscreen I2C data	VOLmax=0.45V VOHmin=1.35V	No external pull-up is required

The touch screen interface reference circuit is shown in the following figure:

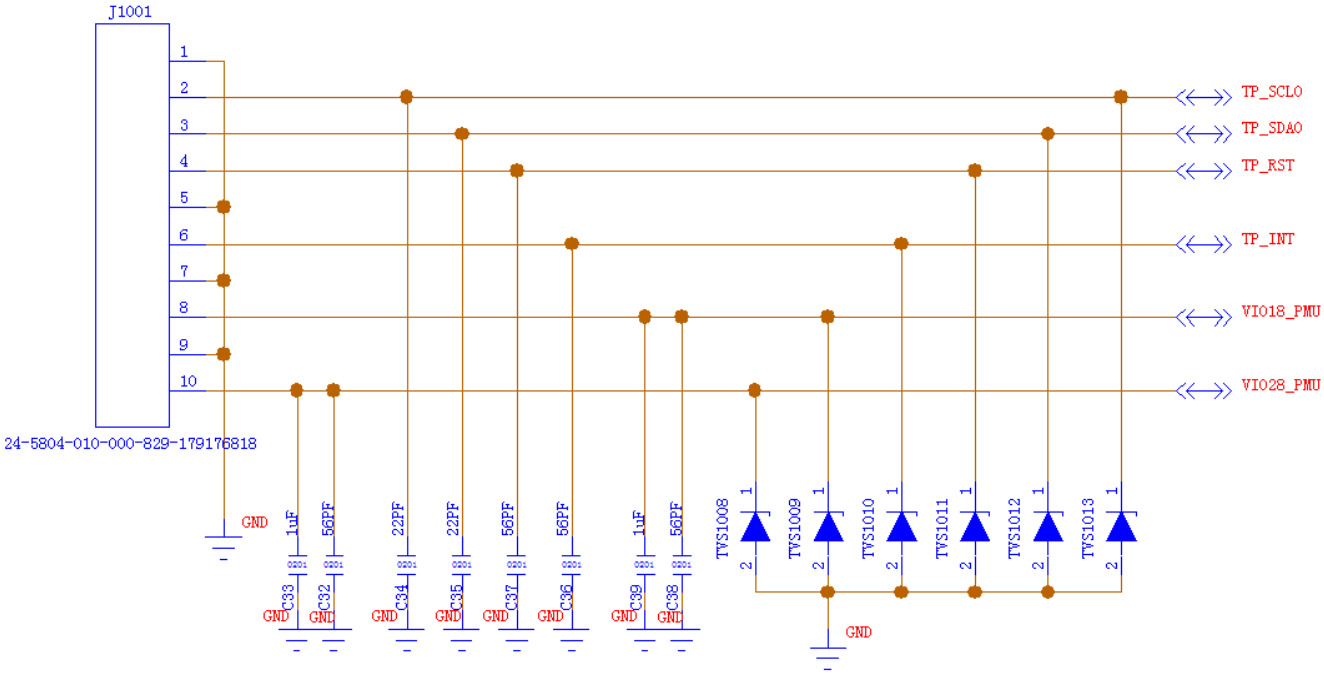

Figure 16 Touch Screen Interface Reference Circuit

3.20 Camera Interface

The H1503BQ video input interface is based on the MIPI CSI standard, which supports dual-camera 4-lane camera (4-lane+4-lane) or triple camera (4-lane+2-lane+1-lane); H1503BQ supports up to 21MP pixel camera; The camera and photo quality are determined by a variety of factors such as camera sensor, lens specifications, and so on.

Here are a few things to keep in mind:

- VDDCAMA can be reused when multiple cameras are not working at the same time. If you are working at the same time, you can try to share VDDCAMA but reserve an external LDO to prevent interference.

- If the VDDCAM power supply requirements of the camera exceed the range of 1.0~1.4V, an external LDO is required.
- If the camera module has a pixel of 16M or more, VDDCAMA needs to be backed up by an external LDO.
- RST and PWDN signals cannot be multiplexed by multiple cameras or configured for other functions;
- If you must share MCLK, make sure that the power-on and initialization timing (power and clock) can meet the requirements of each camera.
- Multiple cameras can be mounted on one I2C bus, and the I2C addresses of CMOS sensor, VCM driver, and EEPROM on the same I2C bus cannot conflict.
- EEPROM is required for dual cameras, EEPROM is required for single cameras above 13M, and EEPROM is not less than 64kbit;
- The dual-camera/multi-camera module draws out the synchronization signal VSYNC, which is used for hardware frame synchronization.

The camera interface is defined as follows:

Table 20 Camera Interface Pin Definition

Camera Interface					
Pin Name	**Pin Number**	**I/O**	**Description**	**DC Characteristics**	**Remark**
VCAM_AVDD	129	PO	Camera analog power supply	Vnorm=2.8V IOmax =200mA	To supply power to the analog voltage part of the camera, 1.0uF ~ 4.7uF bypass capacitor needs to be added when using
VCAM_AF	193	PO	Output 2.8V	Vnorm=2.8V IOmax=400mA	To power the focusing motor of the external camera, 1.0uF ~ 2.2uF bypass capacitors need to be added when using
VCAMD_PMU	192	PO	Digital power supply for the camera	Vnorm=1.2V IOmax=400mA	To supply power to the digital voltage part of the camera, a bypass capacitor of 1.0uF ~ 2.2uF needs to be added when using
VCAM_IOVDD	125	PO	Camera IO power supply	Vnorm=1.8V IOmax=300mA	To supply power to the I/O part of the camera, a bypass capacitor of 1.0uF~2.2uF needs to be added when using

CSI0_CLKN	157	AO	MIPI CSI0 clock is negative		Multiplex 2-lane cameras CSI0A_LN1N
CSI0_CLKP	196	AO	MIPI CSI0 clock positive		Multiplex 2-lane cameras CSI0A_LN1P
CSI0_LN0N	158	AI	MIPI CSI0 data 0 negative		Multiplex 2-lane cameras CSI0A_CLKN
CSI0_LN0P	197	AI	MIPI CSI0 data 0 positive		Multiplex 2-lane cameras CSI0A_CLKP
CSI0_LN1N	159	AI	MIPI CSI0 data 1 negative		Multiplex the 1lane camera CSI0B_LN0N
CSI0_LN1P	198	AI	MIPI CSI0 data 1 positive		Multiplex 1-lane cameras CSI0B_LN0P
CSI0_LN2N	160	AI	MIPI CSI0 data 2 negative		Multiplex 2-lane cameras CSI0A_LN0N
CSI0_LN2P	199	AI	MIPI CSI0 data 2 positive		Multiplex 2-lane cameras CSI0A_LN0P
CSI0_LN3N	161	AI	MIPI CSI0 data 3 negative		Multiplex the 1lane camera CSI0B_CLKN
CSI0_LN3P	200	AI	MIPI CSI0 data 3 positive		Multiplex 1-lane cameras CSI0B_CLKP
CSI1_CLKN	63	AO	MIPI CSI0 clock negative		
CSI1_CLKP	64	AO	MIPI CSI0 clock positive		
CSI1_LN0N	65	AI	MIPI CSI0 data 0 negative		
CSI1_LN0P	66	AI	MIPI CSI0 data 0 positive		
CSI1_LN1N	67	AI	MIPI CSI0 data 1 negative		
CSI1_LN1P	68	AI	MIPI CSI0 data 1 positive		
CSI1_LN2N	72	AI	MIPI CSI0 data 2 negative		
CSI1_LN2P	73	AI	MIPI CSI0 data 2 positive		
CSI1_LN3N	70	AI	MIPI CSI0 data 3 negative		
CSI1_LN3P	71	AI	MIPI CSI0 data 3 positive		

CAM0_MCLK	74	DO	Camera 0 clock signal	VOLmax=0.45V VOHmin=1.35V	1.8V voltage domain
CAM1_MCLK	75	DO	Camera 1 clock signal	VOLmax=0.45V VOHmin=1.35V	1.8V voltage domain
CAM0_RST	79	DO	Camera 0 reset signal	VOLmax=0.45V VOHmin=1.35V	
CAM0_PDN	80	DO	Camera 1 shutdown signal	VOLmax=0.45V VOHmin=1.35V	
CAM1_RST	81	DO	Camera 0 reset signal	VOLmax=0.45V VOHmin=1.35V	
CAM1_PDN	82	DO	Camera 1 shutdown signal	VOLmax=0.45V VOHmin=1.35V	
SCL2	166	DO	Camera I2C clock signal	VOLmax=0.45V VOHmin=1.35V	No external pull-up is required
SDA2	205	IO	Camera I2C data signal	VOLmax=0.45V VOHmin=1.35V	No external pull-up is required

The 2-way camera reference circuit is as follows:

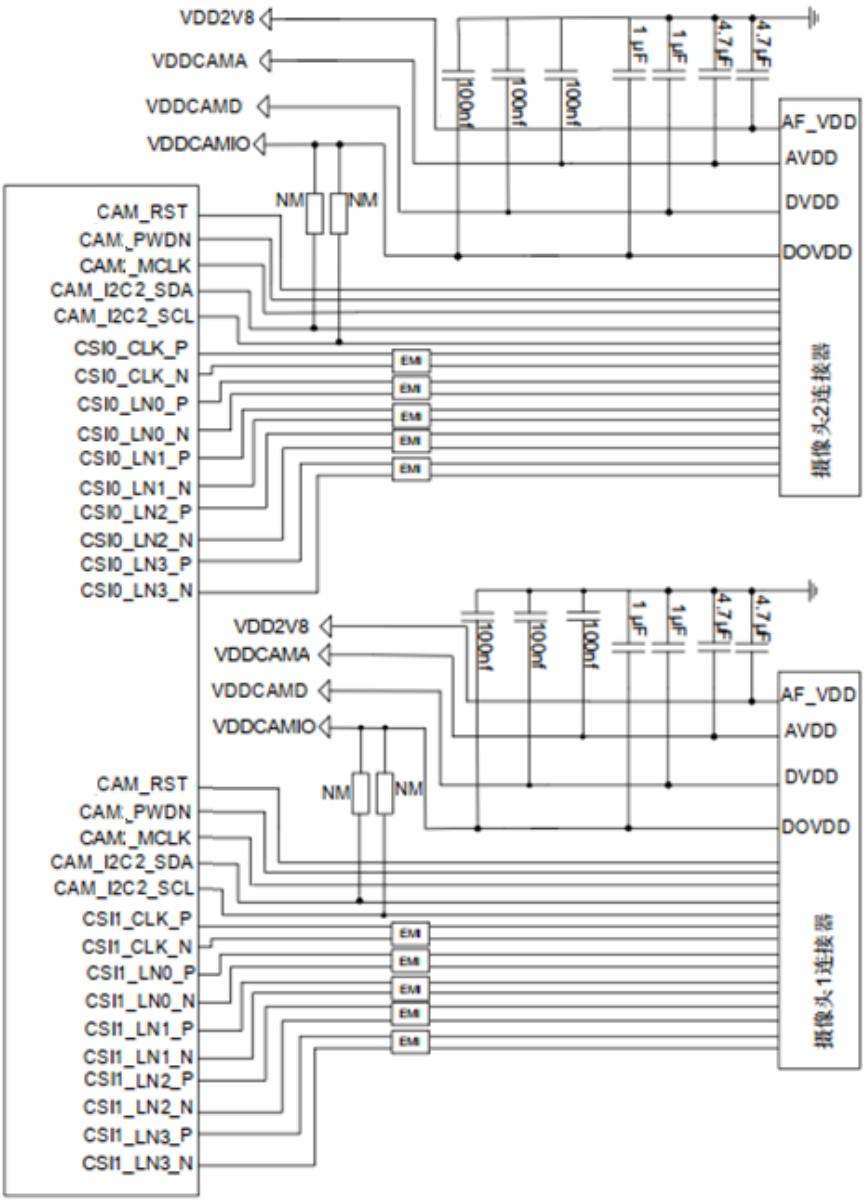

Figure 17 2-Way Camera Reference Design

The 3-way camera reference circuit is as follows:

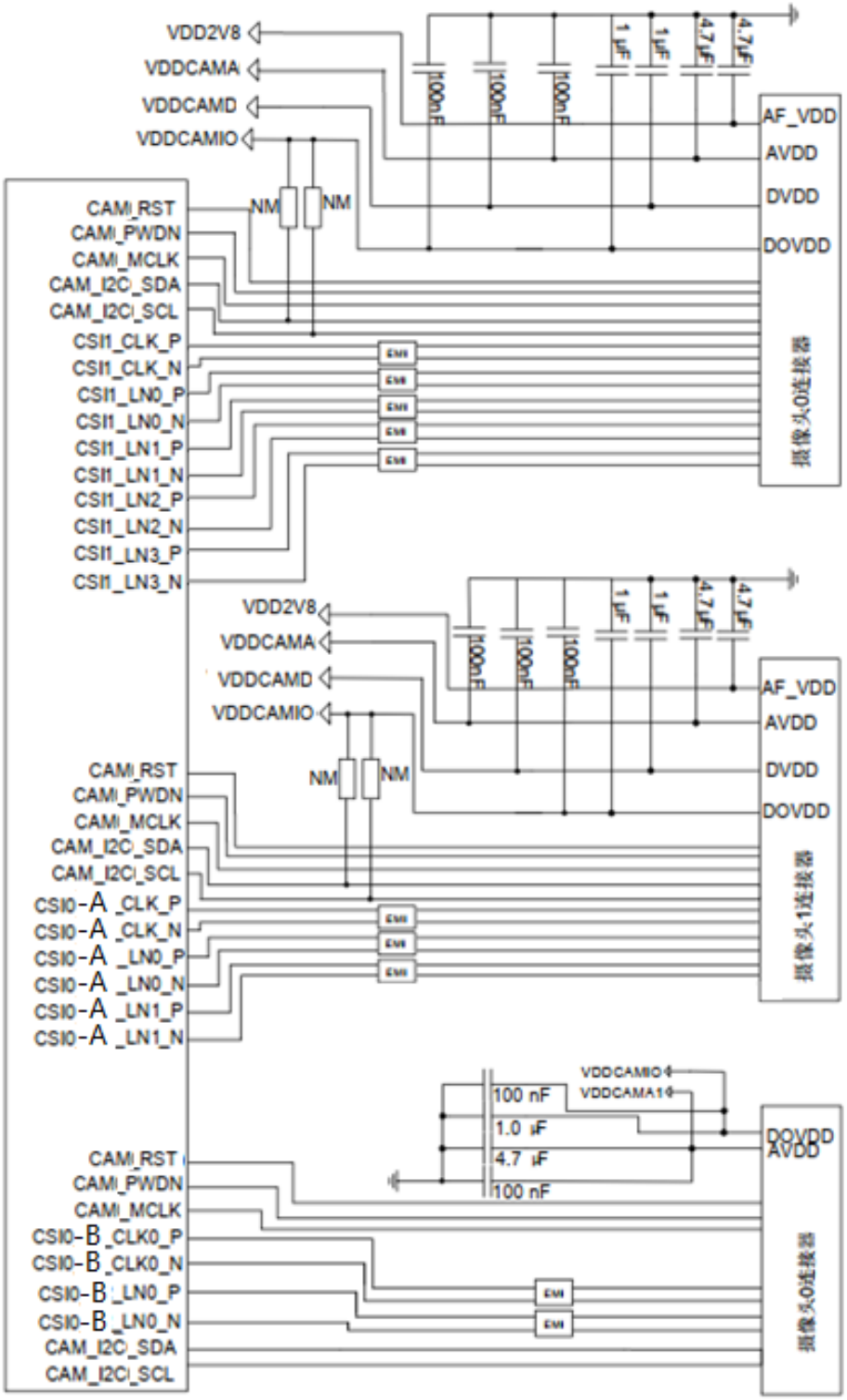

Figure 18 3-way Camera reference design

Remark

MIPI is a high-speed signal line, and customers can connect industrial mode inductors in series on MIPI signal lines according to project requirements to improve electromagnetic radiation interference.

3.20.1 Design Considerations

● When designing your schematic, pay attention to the correct video device interface definition. Different video components have different definitions of connectors, and you need to pay attention to the correct connection between connectors and components.

●MIPI is a high-speed signal line with a transmission rate of up to 2.5Gbps; 100Ω differential impedance for wiring; It is recommended that the wiring be placed on the inner layer and not cross with other signal lines. For MIPI traces of the same video component, equal length control is required. It is recommended to maintain 1.5 times the line width spacing between MIPI signal lines to prevent crosstalk; When doing 100Ω differential impedance matching, do not cross-connect different GND planes to ensure the consistency of impedance.

● MIPI wiring requirements are as follows:

a) The total length of the cable shall not exceed 76.2mm;

b) The differential impedance of the control is required to be 100Ω and the error is ±15%.

Table 21 The Length of The MIPI Trace Inside The Module

Pin Number	Signal	Length (mm).	Length Difference (P-N)
157	CSI0_CLKN	20.71366	0.14466
196	CSI0_CLKP	20.56900	
158	CSI0_LN0N	20.9705	-0.33215
197	CSI0_LN0P	20.63835	
159	CSI0_LN1N	20.53910	-0.04024
198	CSI0_LN1P	20.49866	
160	CSI0_LN2N	20.36316	-0.09911
199	CSI0_LN2P	20.26404	
161	CSI0_LN3N	20.33060	0.17818
200	CSI0_LN3P	20.50878	
63	CSI1_CLKN	25.84925	-0.43205
64	CSI1_CLKP	25.41720	

65	CSI1_LN0N	25.27341	0.05422
66	CSI1_LN0P	25.32763	
67	CSI1_LN1N	25.38328	-0.26716
68	CSI1_LN1P	25.11612	
72	CSI1_LN2N	25.45761	-0.41528
73	CSI1_LN2P	25.04233	
70	CSI1_LN3N	25.07939	0.41109
71	CSI1_LN3P	25.49058	

3.20.2 Flashlight Interface

H1503BQ There is only one Flashlight interface, and the pins of this interface are defined as follows:

Table 22 Flashlight Interface Pin Definition

Flashlight Interface					
Pin Name	**Pin Number**	**I/O**	**Description**	**DC Characteristics**	**Remark**
FLASH_LED	180	AO	Flash positive output	Iomax=1A	

3.21 Sensor Interface

H1503BQ Connect to sensors via I2C communication, support ALS/PS, Compass, G-sensor, Gyroscope and other sensors.

Table 23 Sensor Interface Pin Definition

Sensor Interface					
Pin Name	**Pin Number**	**I/O**	**Description**	**DC Characteristics**	**Remark**
SCL1	91	DO	I2C1 serial clock	VOLmax=0.45V VOHmin=1.35V	No external pull-up is required

SDA1	92	IO	I2C1 serial data	VOLmax=0.45V VOHmin=1.35V	No external pull-up is required

The sensor reference circuit is as follows:

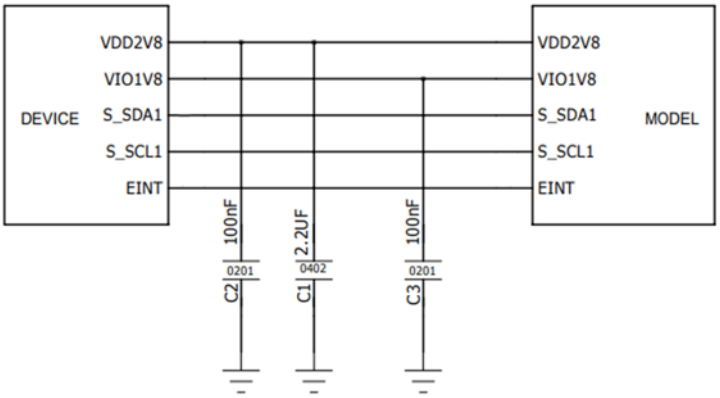

Figure 19 Sensor Reference Design Circuit

3.22 Audio Interface

H1503BQ provides three analog audio input channels and four analog audio output channels. The pins of the audio interface are defined in the following table:

Table 24 Audio interface pin definition

Audio Interface					
Pin Name	**Pin Number**	**I/O**	**Description**	**DC Characteristics**	**Remark**
MICBIAS0	147	PO	MIC0、MIC2 bias voltage	VO=0V~2.94V	
MIC0_P	4	TO	Main microphone input positive		
MIC0_N	5	TO	Main microphone input negative		
MIC2_P	148	TO	Secondary microphone input positive		
MIC2_N	149	TO	Secondary microphone input negative		
EAR_P	8	TO	Differential handset output positive		
EAR_N	9	TO	Differential earpiece outputs a negative pole		

LINEOUT_P	10	TO	Differential line out output positive		
LINEOUT_N	11	TO	Differential line out output negative		
MICBIAS1	155	PO	Headphone MIC bias voltage	VO=0V~2.94V	
HP_MIC	6	TO	Headphone MIC input		
AU_HPR	136	TO	Headphone right channel		
AU_REFN	137	TO	Headphone reference ground		If not, it needs to be grounded
AU_HPL	138	TO	Headphone left channel		

- Modules have: 3 Group audio inputs, including: 2 Group Differential Input Channels and 1 group of single-ended input channels;
- The receiver interface adopts differential output;
- The lineout interface uses differential output; if an external speaker is required, an audio amplifier must be added outside the module.
- The headphone jack is a stereo left and right channel output, and the headset has a plug-in detection function.

3.22.1 Microphone Interface Reference Circuit

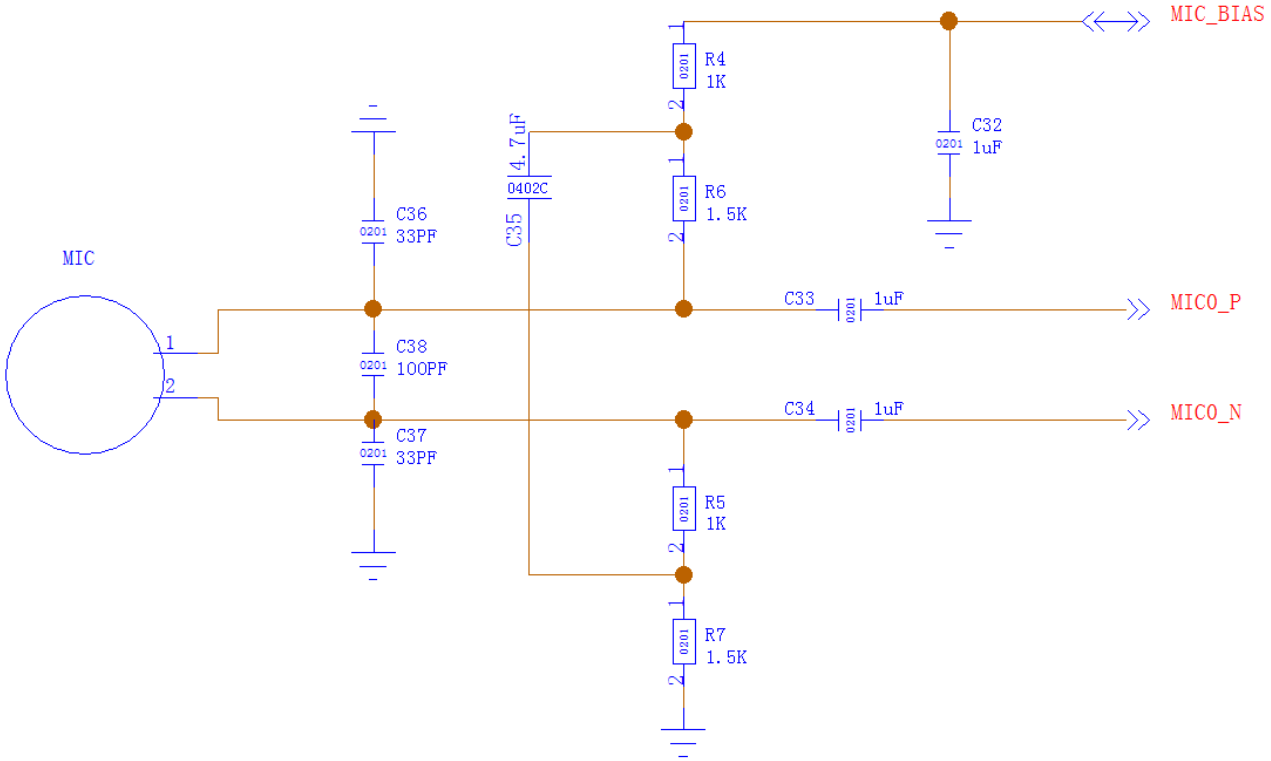

Figure 20 Standing Microphone Reference Circuit (The Sub-MIC Wiring Method Is The Same As The Main MIC)

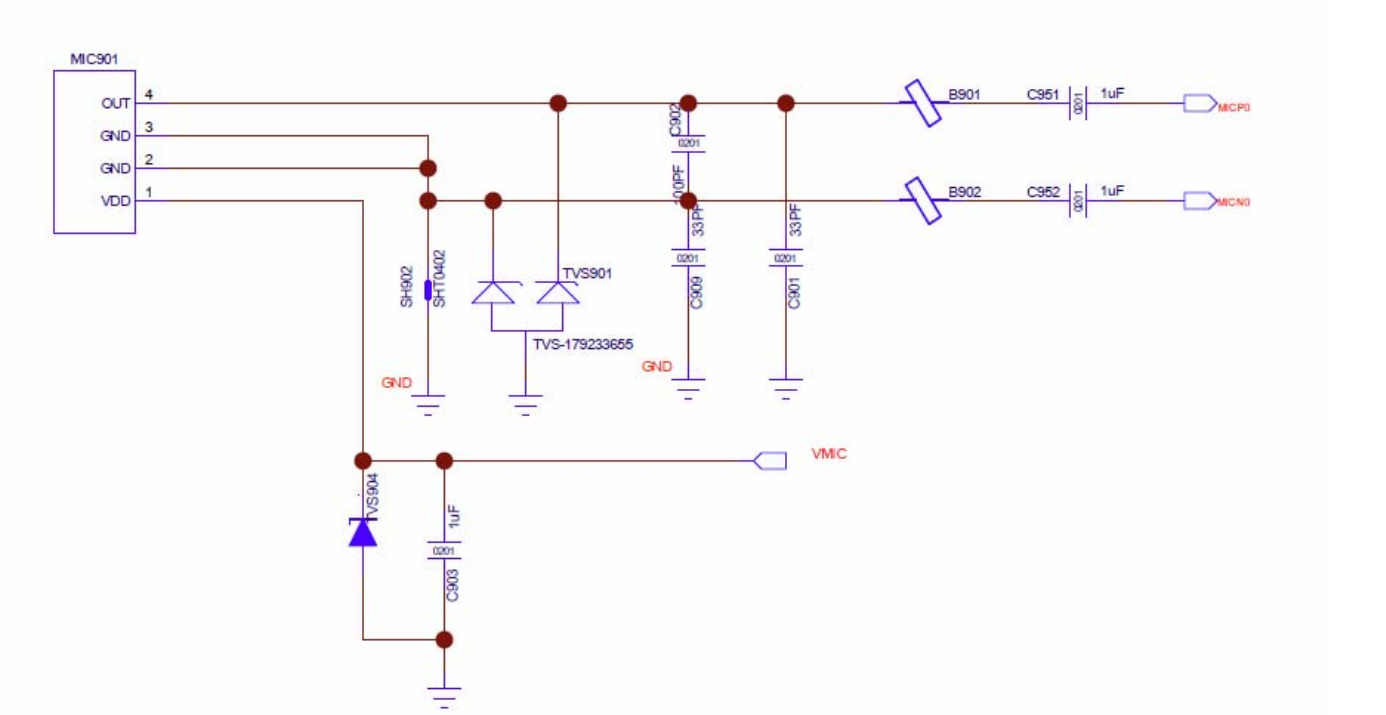

Figure 21 Silicon Microphone Reference Circuit (The Wiring Method Of The Sub-MIC Is The Same As

That Of The Main MIC)

3.22.2 Handset Interface Reference Circuit

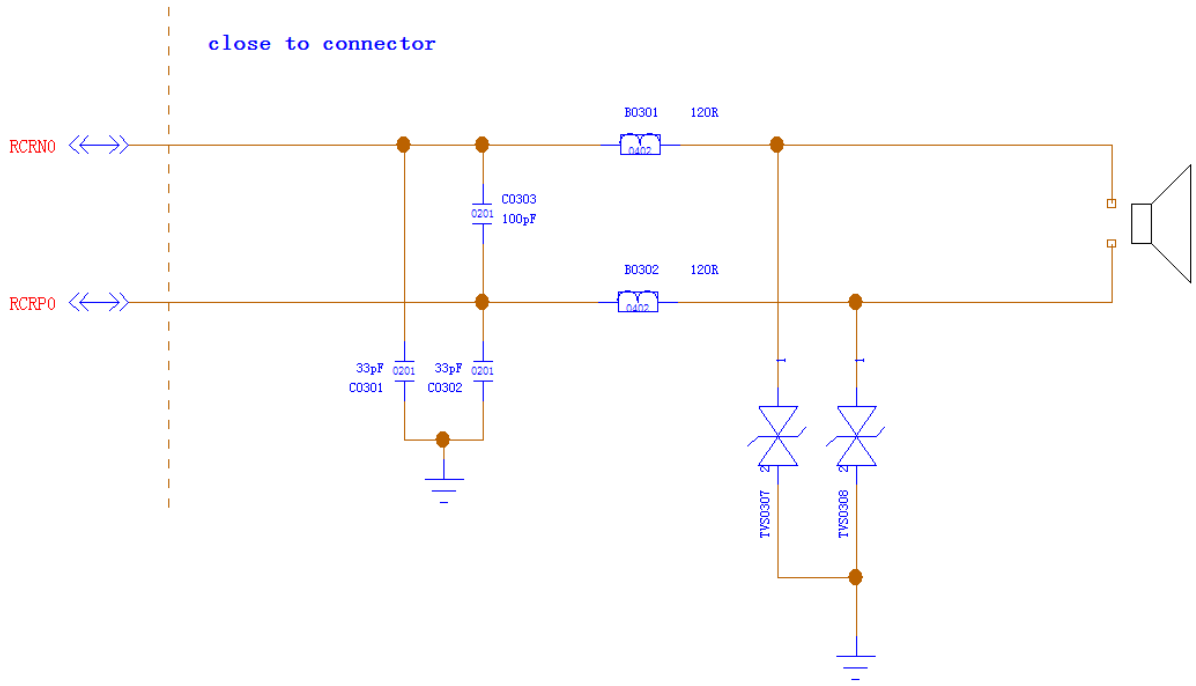

Figure 22 Handset Output Interface Reference Circuit

3.22.3 Headphone Interface Reference Circuit

If use the 3.5mm headphone interface, the reference design is as follows:

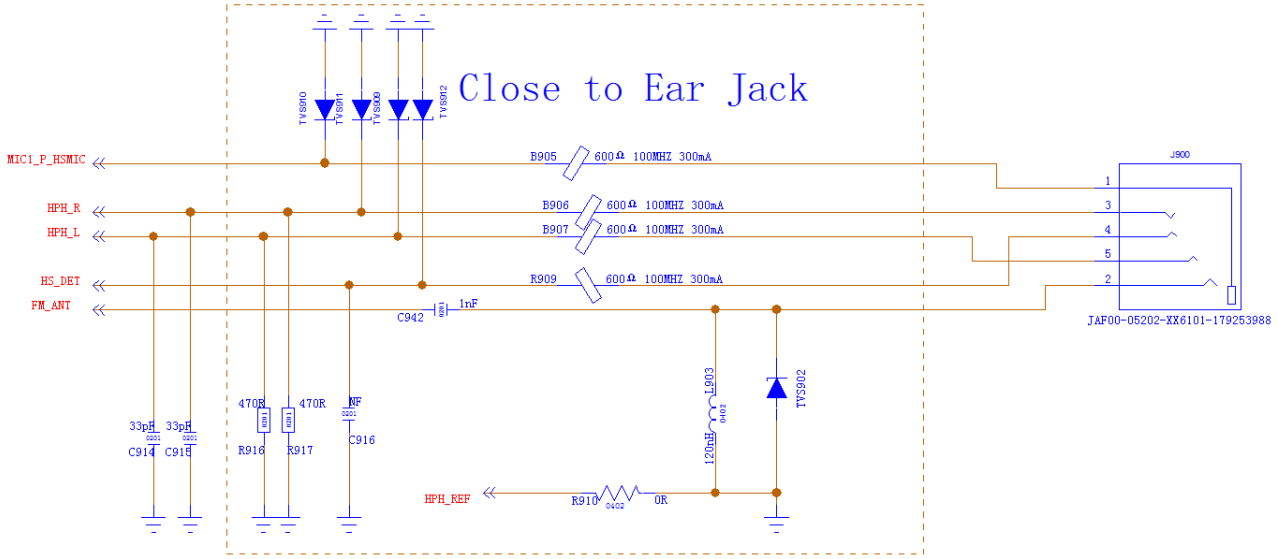

Figure 23 Headphone Jack Reference Circuit

You can also use the TYPEC port to support analog headphones and digital headphones, you only need to connect a USB2.0 and Audio Swith IC and EU/US headphone switcher IC, take the BCT4321N of the BROADCHIP brand and the WAS4766C of the WILLSEMI brand as examples, the reference circuit is as follows:

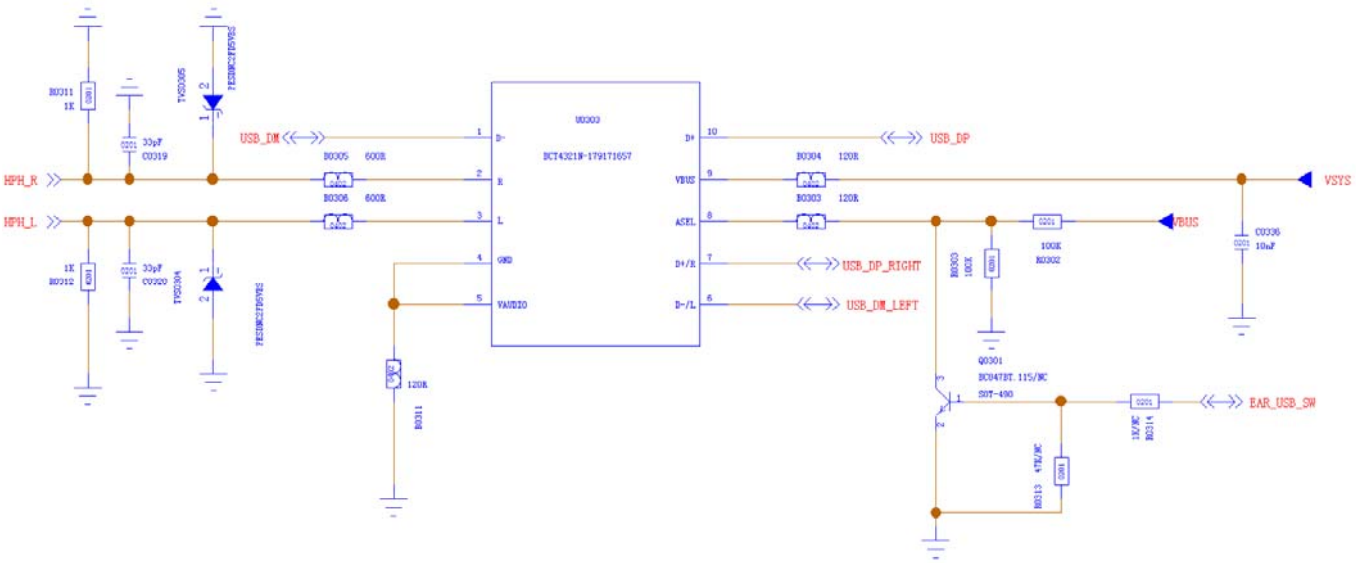

Figure 24 USB2.0 and Audio Swith IC Reference Circuit

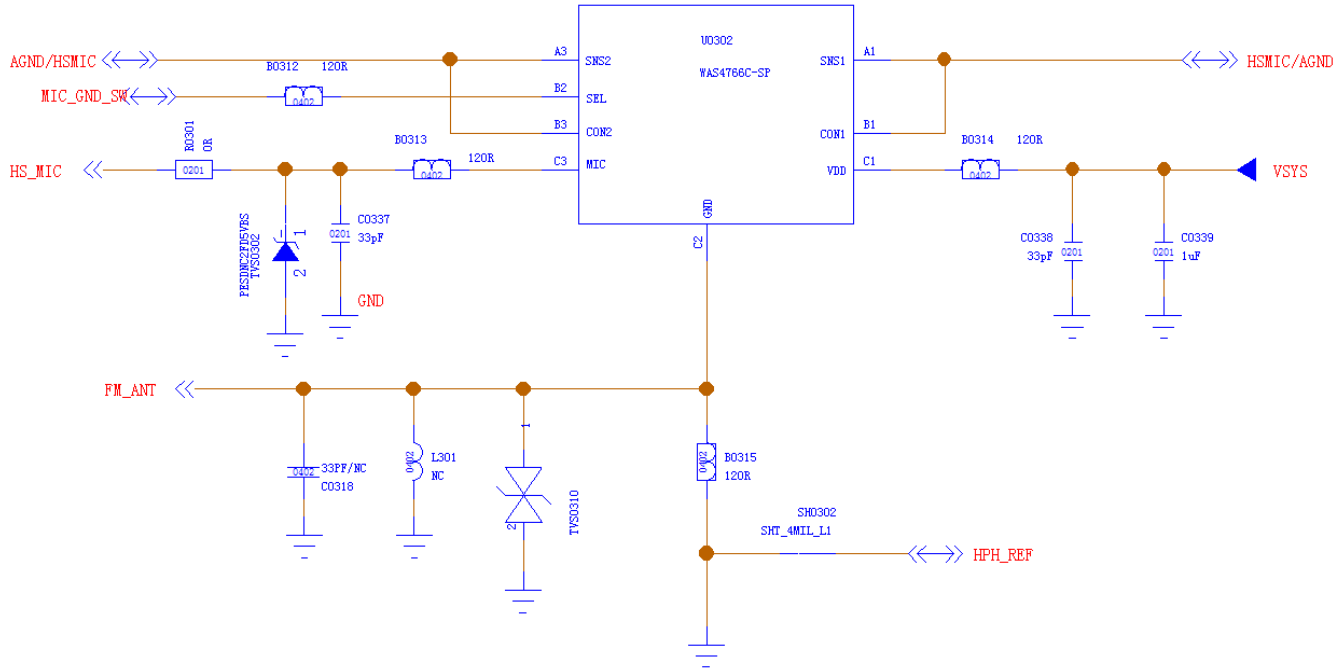

Figure 25 EU/US headphone switcher IC Reference Circuit

3.22.4 Speaker Interface Reference Circuit

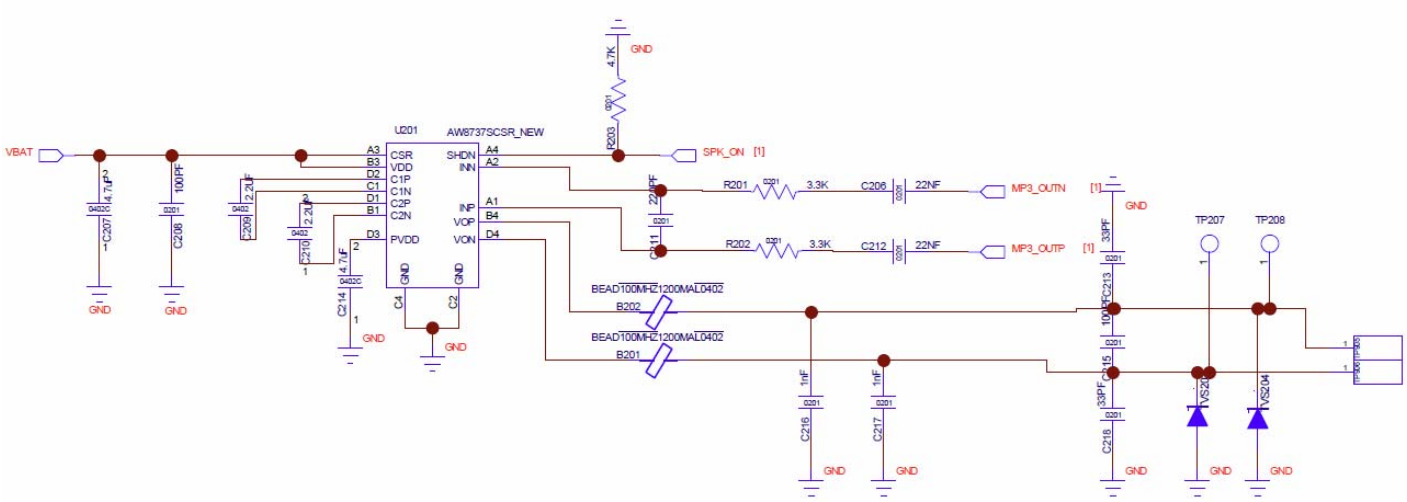

Figure 26 Speaker Interface Reference Circuit

H1503BQ need to use an external audio amplifier to drive the speakers.

3.22.5 Audio Signal Design Considerations

Handheld microphones and hands-free microphones are recommended to use electret microphones with built-in RF filtering dual condensers (e.g., 10pF and 33pF); Filtering out RF

interference from the source of the interference minimizes coupled TDD noise. The 33pF capacitor is used to filter out high-frequency interference when the module is operating at EGSM900. If you don't add this capacitor, you may hear TDD noise during calls. At the same time, the 10pF capacitance is used to filter out high-frequency interference when operating at DCS1800. It should be noted that since the resonance point of a capacitor depends largely on the material and manufacturing process of the capacitor, it is necessary to consult the supplier of the capacitor when selecting a capacitor to select the most appropriate capacitance value to filter out the high-frequency noise during operation.

The severity of high-frequency interference during GSM transmission is usually primarily dependent on the customer's application design. In some cases, the TDD of EGSM900

The noise is severe, and in some cases, the TDD noise of the DCS1800 is severe. Therefore, customers can choose the required filter capacitor according to the test results, and sometimes even do not need to paste this kind of filter capacitor.

The antenna should be positioned as far away from the audio element and audio traces as possible to reduce radiated interference; The power and audio traces should not be parallel and should be as far away from the audio traces as possible.

Differential audio traces must follow the Layout rules for the differential signal .

3.23 Forced Download Interface

Table 25 Forced Download Pin Definitions

Forced Interface					
Pin Name	**Pin Number**	**I/O**	**Description**	**DC Characteristics**	**Remark**
THEFT-	96	OF	Volume reduction and forced downloads	VOLmax=0.45V VOHmin=1.35V	

KCOL0 is an emergency download interface. When the power is off, pull the KCOL0 pin to the ground, and the module can enter the forced download mode, which is used for the final processing when the product cannot be started normally due to a fault, and the interface can be reused as a volume key. In order to facilitate the subsequent software upgrade and debugging of the product, please reserve this reference circuit.

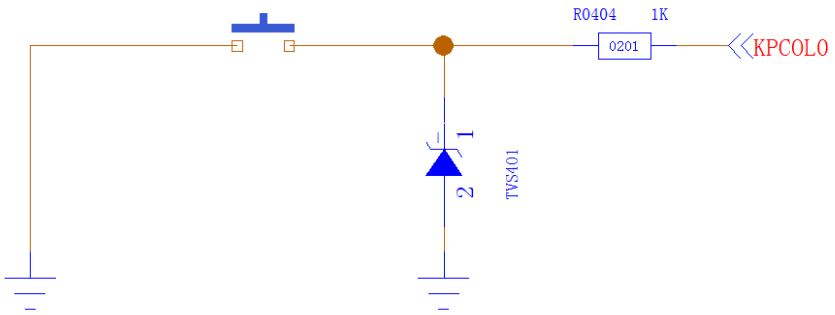

Figure 27 Forced Download Interface Reference Circuit

3.24 LEDs Indicator Interface

Table 26 LEDs Indicator Interface Pin Definitions

LEDs Indicate The Interface					
Pin Name	**Pin Number**	**I/O**	**Description**	**DC Characteristics**	**Remark**
CHG_LED	195	AI	Charging indication		Input Current Range: 1mA~6mA
LED_R	252	AI	LED control negative		The detached version is GPIO174
LED_G	253	AI	LED control negative		The detached version is GPIO173
LED_B	249	AI	LED control negative		The detached version is GPIO175

The LED indicator interface reference circuit as follows:

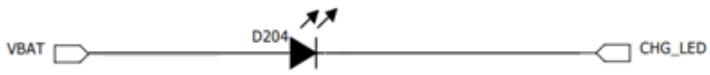

Figure 28 LEDs indicator interface reference circuit

When GPIO control is used, an external drive circuit is required.

4 Wi-Fi and BT

The H1503BQ module provides a Wi-Fi, BT, GNSS common antenna interface ANT_WI-FI/BT/GNSS with an impedance control of 50Ω. Customers can connect external PCB antennas, suction cup antennas or ceramic antennas through this interface to achieve Wi-Fi, BT and GNSS functions.

4.1 Wi-Fi Overview

The H1503BQ module supports 2.4GHz and 5GHz WLAN wireless communication, and supports 802.11a, 802.11b, 802.11g, 802.11n and ac standards, with a maximum speed of 433Mbps. Its characteristics are as follows:

- Support WIFI and BT FDD operation modes
- Supports global WIFI 5G channels, including the latest frequency band (5925MHz)
- Support transmit power control for each WIFI packet
- PVT self-calibration is supported to cope with environmental changes
- Supports a wide range of crystal oscillator clock frequencies
- HT20 and HT40 support MCS 0-7
- VHT20 support MCS 0-8
- VHT40 and VHT80B support MCS 0-9

4.1.1 Wi-Fi Performance Metrics

The following table lists the transmit and receive performance of H1503BQ Wi-Fi function.

Table 27 Wi-Fi Transmit Performance

	Standard	Speed	Output Power
2.4GHz	802.11b	1Mbps	16dBm±2.5dB
	802.11b	11Mbps	16dBm±2.5dB
	802.11g	6Mbps	16dBm±2.5dB
	802.11g	54Mbps	14dBm±2.5dB

	802.11n HT20	MCS0	15dBm±2.5dB
	802.11n HT20	MCS7	13Bm±2.5dB
	802.11nHT40	MCS0	14Bm±2.5dB
	802.11nHT40	MCS7	13dBm±2.5dB
5GHz	802.11a	6Mbps	15dBm±2.5dB
	802.11a	54Mbps	13dBm±2.5dB
	802.11n HT20	MCS0	15dBm±2.5dB
	802.11n HT20	MCS7	13dBm±2.5dB
	802.11n HT40	MCS0	15dBm±2.5dB
	802.11n HT40	MCS7	13dBm±2.5dB
	802.11ac VHT20	MCS0	14dBm±2.5dB
	802.11ac VHT20	MCS8	13dBm±2.5dB
	802.11ac VHT40	MCS0	13dBm±2.5dB
	802.11ac VHT40	MCS9	12dBm±2.5dB
	802.11ac VHT80	MCS0	13dBm±2.5dB
	802.11ac VHT80	MCS9	12dBm±2.5dB

Table 28 WiFi Reception Performance

	Standard	Speed	Sensitivity
2.4GHz	802.11b	1Mbps	-96dBm
	802.11b	11Mbps	-87dBm
	802.11g	6Mbps	-91dBm

	802.11g	54Mbps	-73dBm
	802.11n HT20	MCS0	-90dBm
	802.11n HT20	MCS7	-72dBm
	802.11nHT40	MCS0	-87dBm
	802.11nHT40	MCS7	-68dBm
5GHz	802.11a	6Mbps	-90dBm
	802.11a	54Mbps	-70dBm
	802.11n HT20	MCS0	-88dBm
	802.11n HT20	MCS7	-69dBm
	802.11n HT40	MCS0	-86dBm
	802.11n HT40	MCS7	-66dBm
	802.11ac VHT20	MCS8	-68dBm
	802.11ac VHT40	MCS9	-64dBm
	802.11ac VHT80	MCS9	-60dBm

The reference specifications are as follows:

● IEEE 802.11n WLAN MAC and PHY, Oct., 2009 + IEEE 802.11-2007 WLAN MAC and PHY, June, 2007.

●IEEE Std 802.11b, IEEE Std 802.11d, IEEE Std 802.11e, IEEE Std 802.11g, IEEE Std 802.11i: IEEE 802.11-2007 WLAN MAC and PHY, June, 2007.

4.2 BT Overview

H1503BQ module supports BT5.0 specification, and the modulation mode supports GFSK, DQPSK, 8-DPSK and BLE.

●Max 7 BT links and 16 BLE links.

●Supports up to 3.5 PICONET picones at the same time.

● Supports 1 SCO or eSCO (Extended Synchronous Connection Oriented) connection.

The BR/EDR channel bandwidth is 1MHz and can accommodate 79 channels; The BLE channel has a bandwidth of 2MHz and can accommodate 40 channels.

Table 29 BT Rate And Version Information

Version	Data Rate	Maximum Application Throughput Remark	Version
1.2	1Mbit/s	> 80Kbit/s	
2.0+EDR	3Mbit/s	> 80Kbit/s	
3.0+HS	24Mbit/s	Please refer to 3.0+HS	
4.0	24Mbit/s	Please refer to 4.0 LE	
4.0	48Mbit/s	Please refer to 5.0 LE	

The reference specifications are as follows:

- Bluetooth RF TSS and TP Specification 1.2/2.0/2.0 + EDR/2.1/2.1+ EDR/3.0/3.0 + HS, Aug. 6, 2009
- Bluetooth Low Energy RF PHY Test Specification, RF-PHY. TS/4.0.0, Dec. 15, 2009

4.2.1 BT Performance Metrics

Table 30 BT Transmit and Receive Performance Metrics

Transmitter Performance			
Grouping Type	DH5	2-DH5	3-DH5
Transmit Power	10dBm±2.5dB	8dBm±2.5dB	8dBm±2.5dB
Receiver Performance			
Grouping Type	DH5	2-DH5	3-DH5
Receive Sensitivity	-93dBm	-92dBm	-86dBm

5 GNSS

H1503BQ smart module supports GPS, Glonass, Beidou and Galieo positioning systems. By default, Wi-Fi, BT, and GNSS share antenna interface ANT_WI-FI/BT/GNSS. An independent GNSS antenna interface can also be selected, and LNA needs to be designed on the bottom board, which can effectively improve the positioning sensitivity of GNSS.

5.1 GNSS Performance Metrics

The following table lists the GNSS performance metrics for the H1503BQ module in conducted mode.

Table 31 GNSS Performance

Parameter	Status Reason	Typical	Unit
Sensitivity (GNSS)	cold boot	-146	dBm
	recapture	-158	dBm
	trace	-160	dBm
TTFF (GNSS)	cold boot	32	s
	warm start	30	s
	warm boot	2	s
Static Drift (GNSS)	CEP-50	6	m

5.2 GNSS RF Design Guidance

If the antenna and layout are not well designed, the GNSS reception sensitivity will be reduced, resulting in long GNSS positioning time or low positioning accuracy. The following design principles are adhered to in GNSS RF design:

- GNSS and GPRS RF section (included Layout routing and antenna layout) as far away from the design as possible to prevent the two parts from interfering with each other;
- In the user system,The location layout of GNSS RF signals and RF-related components should be far away from high-speed circuits, power supplies, large inductors, and single-chip microcomputer clock circuits;
- For designs with harsh electromagnetic environments or high requirements for electrostatic protection, ESD protection diodes need to be added at the antenna interface; It is necessary to choose one with ultra-low junction capacitanceESD protection diodes. It is recommended that the junction capacitance should not exceed 0.5pF, otherwise it will affect the impedance characteristics of the RF loop or bypass the attenuation of the RF signal;
- Whether it is a feeder or a PCB trace, 50Ω impedance control is required, and the trace should not be too long;
- Please refer to Section 6.3 for GNSS antenna reference circuit design.

6 Antenna Interface

H1503BQ provides 4 antenna interfaces: primary, diversity, GNSS and Wi-Fi/BT/GNSS antennas. The characteristic impedance of each antenna port is 50Ω.

6.1 Main/Diversity Interface

The pins of the primary/diversity interface are defined in the following table:

Table 32 Main/Diversity Antenna Interface Pin Definition

Pin Name	Pin Number	I/O	Description	Remark
ANT_MAIN	87	IO	Main antenna interface	50Ω characteristic impedance
ANT_DRX	131	AI	Diversity antenna interface	50Ω characteristic impedance

The operating frequency bands of the module are as follows:

Table 33 H1503BQ Supported Frequency Bands

Band	Downlink	Uplink	Unit
GSM850	869~894	824~849	MHz
EGSM900	925~960	880~915	MHz
DCS1800	1805~1880	1710~1785	MHz
PCS1900	1930~1990	1850~1910	MHz
WCDMA B2	1930~1990	1850~1910	MHz
WCDMA B4	2110~2155	1710~1755	MHz
WCDMA B5	869~894	824~849	MHz

LTE-FDD B2	1930~1990	1850~1910	MHz
LTE-FDD B4	2110~2155	1710~1755	MHz
LTE-FDD B5	869~894	824~849	MHz
LTE-FDD B7	2620~2690	2500~2570	MHz
LTE-FDD B12	729~746	699~716	MHz
LTE-FDD B13	746~756	777~787	MHz
LTE-TDD B17	734~746	704~716	MHz
LTE-TDD B25	1930~1995	1850~1915	MHz
LTE-TDD B26	859~894	814~849	MHz
LTE-TDD B66	2110-2180	1710~1780	MHz
LTE-TDD B71	617~6526	663~698	MHz
TD-LTE B41	2496~2690	2496~2690	MHz

6.1.1 RF reference circuits

For the peripheral circuit design of the main antenna/diversity antenna interface, in order to better adjust the RF performance, it is recommended to reserve a π matching circuit. The antenna connection reference circuit is shown in the figure below. Among them, the π matching elements (R1/C1/C2, R2/C3/C4) should be placed as close to the antenna as possible; The capacitor is not connected by default, only the 0Ω resistor.

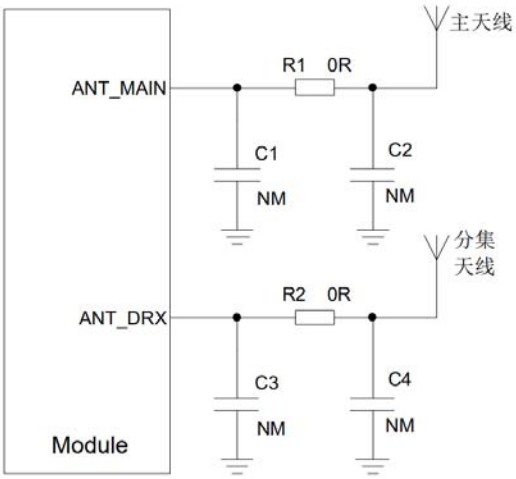

Figure 29 RF reference circuits

6.1.2 RF Signal Cable Layout Reference Guide

For the user's PCB, the characteristic impedance of all RF signal lines should be controlled at 50Ω. In general, the impedance of an RF signal line is determined by the dielectric constant of the material, the width of the trace (W), the clearance to ground (S), and the height of the reference ground plane (H). The characteristic impedance of the PCB is usually controlled in two ways: microstrip line and coplanar waveguide. To illustrate the design principles, the following diagrams illustrate the structural design of a microstrip line and a coplanar waveguide with an impedance line controlled at 50 Ω.

- Microstrip line complete structure

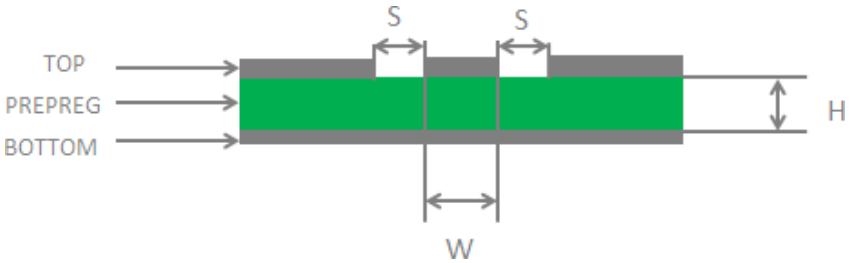

Figure 30 Two-layer PCB Microstrip Line Structure

- Coplanar waveguide complete structure

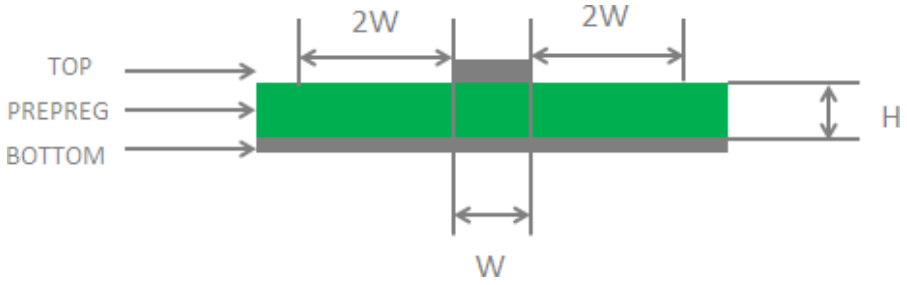

Figure 31 Two-layer PCB Board Coplanar Waveguide Structure

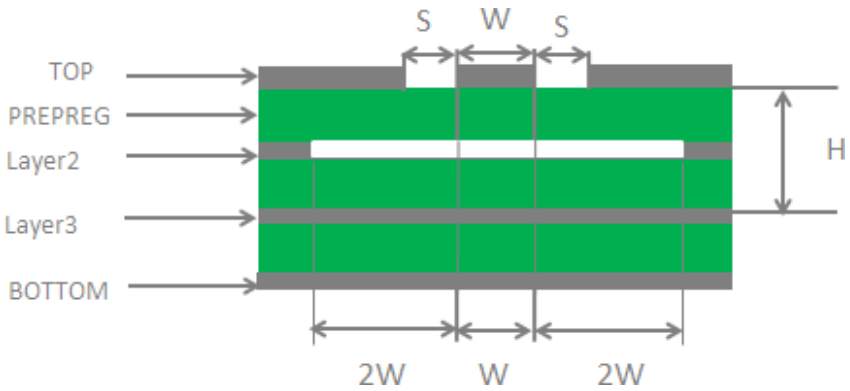

Figure 32 Four-layer PCB Coplanar Waveguide Structure (Reference Ground Is The Third Layer)

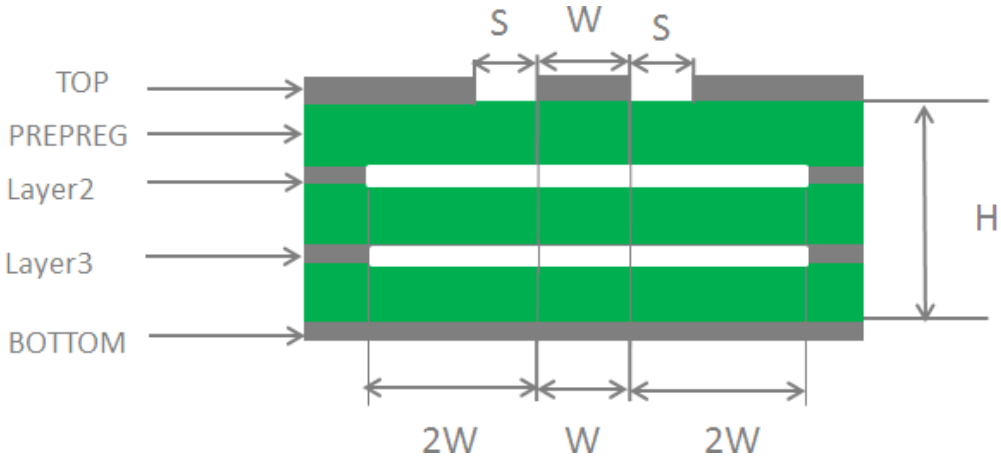

Figure 33 Four-layer PCB Coplanar Waveguide Structure (Reference Ground Is The Fourth Layer)

In the circuit design of RF antenna interface, in order to ensure the good performance and reliability of RF signals, the following design principles are recommended in the circuit design:

- Impedance simulation calculation tools should be used to accurately control the 50Ω impedance of the RF signal line;
- The GND pin adjacent to the RF pin should not be used as a heat dissipation pad and should be in full contact with ground;

● The distance between the RF pins and the RF connector should be as short as possible; At the same time, right-angle wiring is avoided. The recommended wiring angle is 135 degrees;

● Pay attention to the establishment of the connecting device package, and keep a certain distance between the signal pins and the ground;

● The ground plane referenced by the RF signal line should be complete; Adding a certain number of ground holes around the signal line and reference ground can help improve RF performance; The distance between the ground hole and the signal line should be at least twice the line width (2*W).

6.2 Wi-Fi/BT/GNSS Antenna Interface

The following table describes the Wi-Fi/BT/GNSS antenna interface pin definitions and operating frequency bands.

Table 34 Wi-Fi/BT/GNSS Antenna Interface Pin Definition

Pin Name	Pin Number	I/O	Description	Remark
ANT_WI-FI/BT/GNSS	77	IO	Wi-Fi 2.4G/Wi-Fi 5G/BT/GNSS antenna interface	

Table 35 Wi-Fi/BT Operating Frequency Bands

Type	Band	Unit
802.11 a/b/g/n/ac	2402~2482 5180~5825	MHz
BT5.0	2402~2480	MHz

The Wi-Fi/BT antenna connection reference circuit is shown in the figure below. Among them, the capacitor is not pasted by default, only the 0Ω resistor.

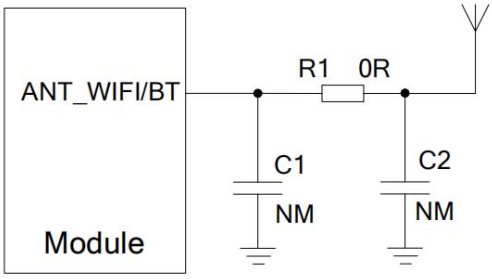

34 Wi-Fi/BT Antenna Interface Reference Circuit

6.3 GNSS Antenna Interface

The following table describes the GNSS antenna interface pin definitions and operating frequency bands.

Table 36 GNSS Antenna Interface Pin Definition

Pin Name	Pin Number	I/O	Description	Remark
ANT_WI-FI/BT/GNSS	77	IO	Wi-Fi 2.4G/Wi-Fi 5G/BT/GNSS 天线接口	50Ω characteristic impedance
ANT_GNSS	121	AI	GNSS antenna interface	50Ω characteristic impedance
GPIO_GPS_LNA_EN	194	DO	GPS LNA enables control	GPIO91

Table 37 GNSS Operating Frequency Bands

Type	Band	Unit
GPS	1575.42±1.023	MHz
GLONASS	1597.5~1605.8	MHz
BDS	1561.098±2.046	MHz
Galieo	1575.42±1.023	MHz

6.3.1 Passive Antenna Reference Design

Passive ceramic antennas or other forms of GNSS passive antennas can be used, as shown in the following figure:

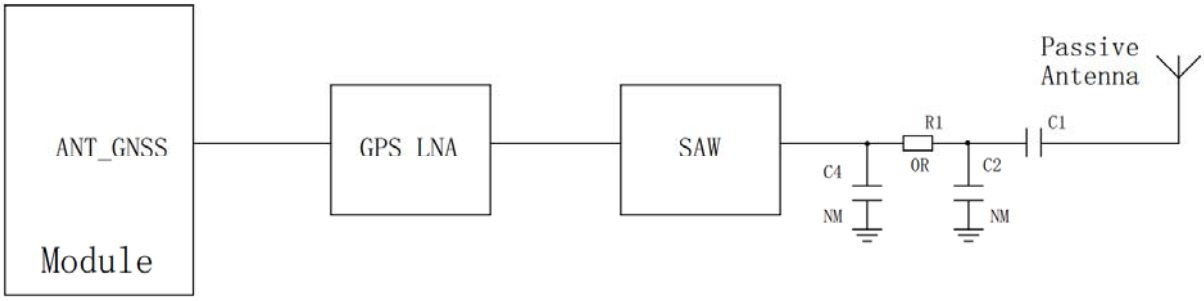

Figure 35 Passive Antenna Reference Circuit

Remark

When the GNSS passive antenna is far away from the module (i.e., when the cable is long) and the external loss is >2dB, in order to ensure the GNSS reception performance, it is recommended that the module add external SAW and LNA circuits, and the LNA should be placed close to the antenna.

6.3.2 Active antenna reference design

The power supply of the active antenna is fed from the signal line of the antenna through the inductance of 56nH, and the common active antenna is 3.3V~5.0V. The power consumption of the active antenna itself is very small, but the power supply is stable and clean, so it is recommended to use a high-performance LDO to power the antenna. The active antenna reference circuit is shown in the figure below

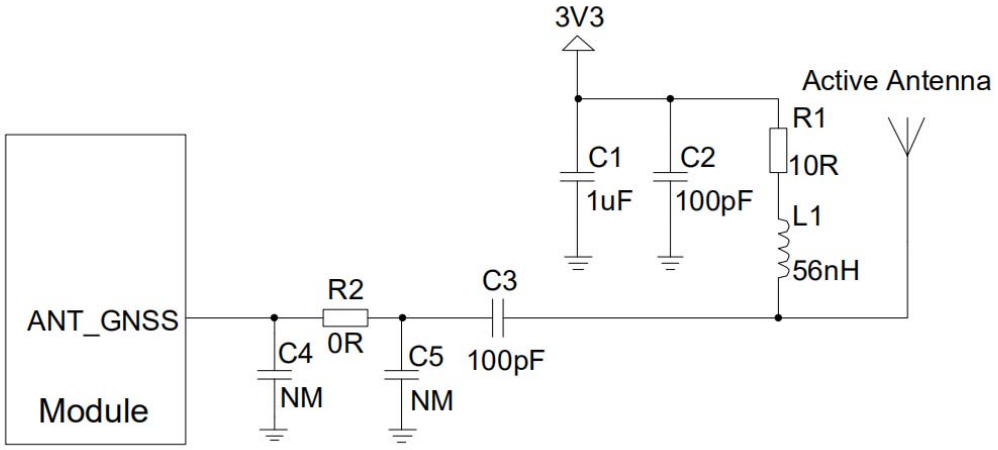

Figure 36 Active Antenna Reference Circuit

6.4 Antenna Installation

6.4.1 Antenna Installation Requirements

The following table lists the requirements for primary, diversity, Wi-Fi/BT and GNSS antennas:

Table 38 Antenna Requirements

Antenna Type	Request
GSM/WCDMA/LTE	VSWR: ≤ 2 Gain (dBi): 1 Maximum input power (W): 50 Input Impedance (Ω): 50 Polarization Type: Vertical Insertion Loss: < 1dB (GSM850, EGSM900, WCDMA B5, LTEB5/B12/B13/B17/B26/B28A/B28B/B71) Insertion Loss: < 1.5dB (GSM1800, PCS1900, WCDMA B2/B4 , LTE B2/B4/B25/B66) Insertion Loss: < 2dB (LTE-FDD B7, LTE-TDD B41)
Wi-Fi/BT	VSWR: ≤ 2 Gain (dBi): 1 Maximum input power (W): 50 Input Impedance (Ω): 50 Polarization Type: Vertical Insertion Loss: < 1dB
GNSS	Frequency range: 1559MHz~1609MHz Polarization type: right-handed circular polarization or linear polarization VSWR: < 2 (typical) Passive Antenna Gain: > 0dBi Active Antenna Noise Figure: < 1.5dB (typical) Active Antenna Gain: > -2dBi

	Active antenna built-in LNA gain: < 17dB (typical) Total Active Antenna Gain: < 17dBi (typical)

Remark

When supporting LTE B13/B14 bands, it is not recommended to use an active GNSS antenna and no LNA is added, but a passive GNSS antenna is recommended.

6.4.2 The Recommended RF Connector For Antenna Mounting

If using an RF connector for antenna connection, Hirose's U.FL-R-SMT connector is recommended.

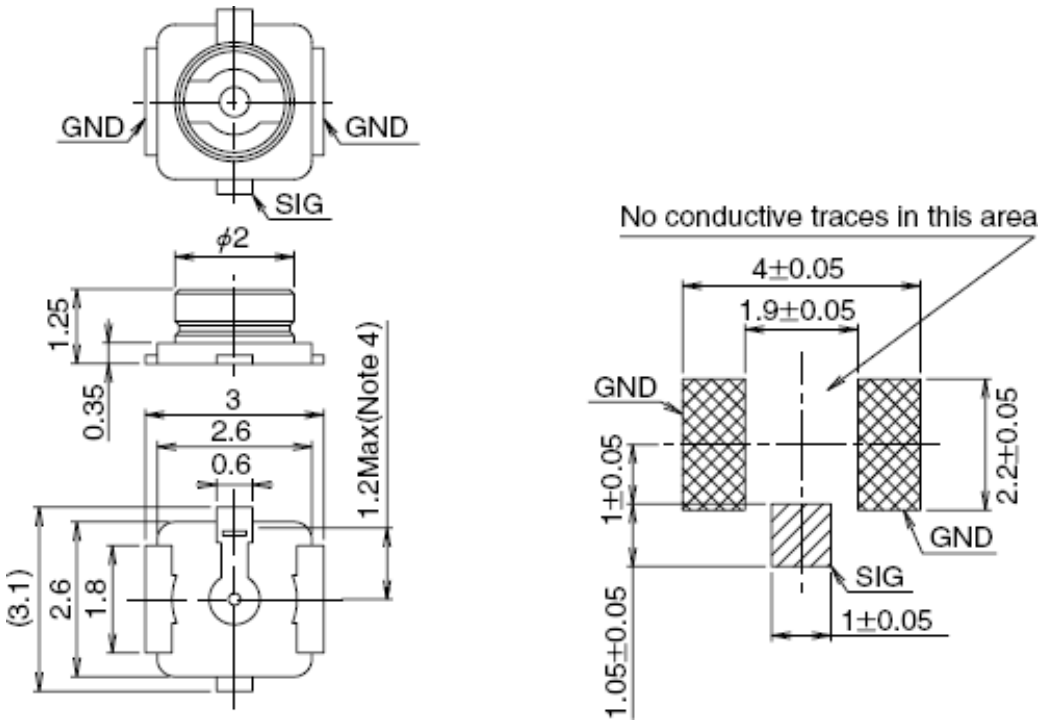

Figure 37 U.FL-R-SMT Connector Dimensions (mm)

You may choose to use the U.FL-LP series cables in conjunction with the U.FL-R-SMT.

	U.FL-LP-040	U.FL-LP-066	U.FL-LP(V)-040	U.FL-LP-062	U.FL-LP-088
Part No.	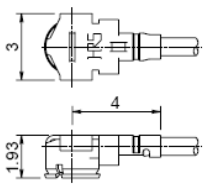	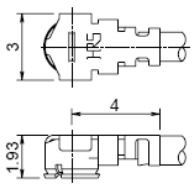	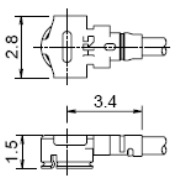	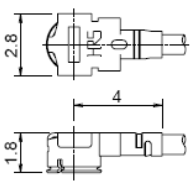	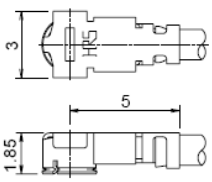
Mated Height	2.5mm Max. (2.4mm Nom.)	2.5mm Max. (2.4mm Nom.)	2.0mm Max. (1.9mm Nom.)	2.4mm Max. (2.3mm Nom.)	2.4mm Max. (2.3mm Nom.)
Applicable cable	Dia. 0.81mm Coaxial cable	Dia. 1.13mm and Dia. 1.32mm Coaxial cable	Dia. 0.81mm Coaxial cable	Dia. 1mm Coaxial cable	Dia. 1.37mm Coaxial cable
Weight (mg)	53.7	59.1	34.8	45.5	71.7
RoHS	YES				

Figure 38 U.FL-LP Connection Cable Series

The following diagram shows the installation dimensions of the cable and connector:

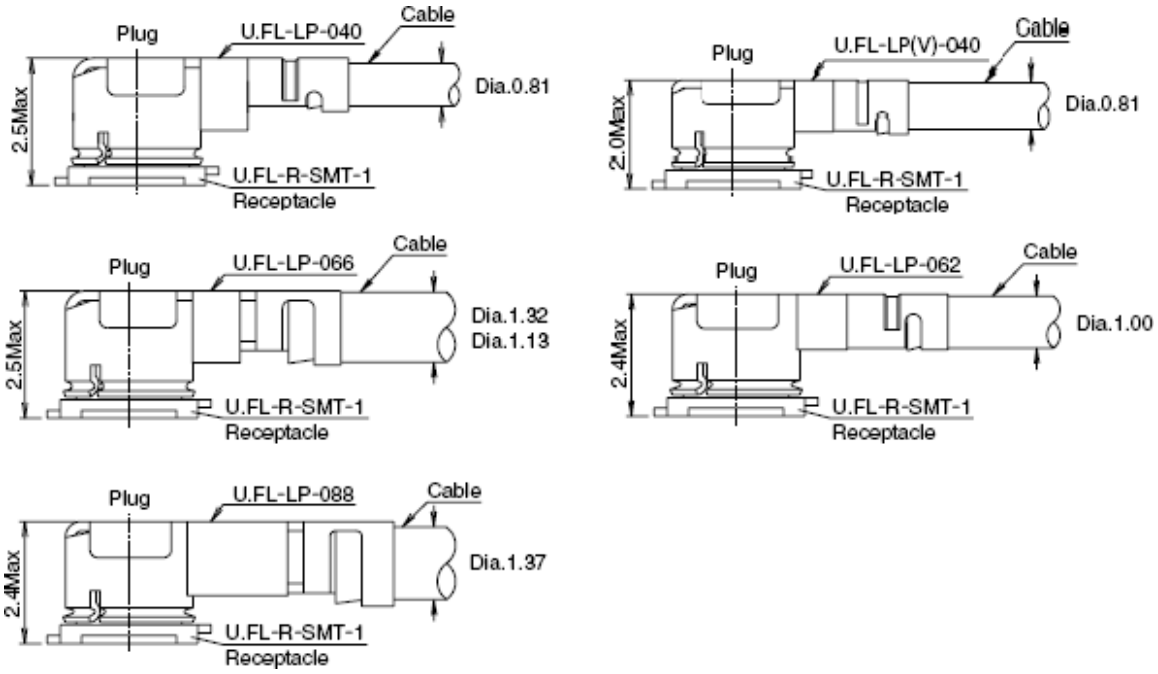

Figure 39 Installation Dimensions (mm)

7 Electrical, Reliability & RF Performance

7.1 Limit Parameters

The following table lists the maximum withstand values for voltage/current at some pins of the module:

Table 39 Limit Parameters

Parameter	Min	Max	Unit
VBAT	-0.5	5.5	V
USB_VBUS	0	15.5	V
VBAT max current	0	4	A
Digital pin voltage	-0.3	2.3	V

7.2 Power rating

Table 40 Module Power Rating

Parameter	Description	Condition	Min	Typical	Max	Unit
VBAT	Battery supply voltage	The voltage must be within that range, including voltage dips, ripple, and spikes	3.5	3.8	4.4	V

7.3 Operating and storage temperature

The following table lists the operating and storage temperature ranges of the modules:

Table 41 Operating and Storage Temperature

Parameter	Min	Typical	Max	Unit
Normal operating temperature	-20	+25	+80	ºC

Storage temperature range	-40		+90	ºC

7.4 Operating current

The working currents of the H1503BQ module in various working modes are shown in the following table:

Table 42 H1503BQ Operating Current

Parameter	Description	Condition	Min	Typical	Max	Unit
IVBAT	Shutdown current	Shutdown		100		uA
	GSM/GPR mode Supply current	Sleep mode (not connected to USB) @DRX=2		77		mA
		Sleep mode (not connected to USB) @DRX=5		77		mA
		Sleep mode (not connected to USB) @DRX=9		77		mA
	WCDMA mode Supply current	Sleep mode (not connected to USB) @DRX=6		100		mA
		Sleep mode (not connected to USB) @DRX=8		100		mA
		Sleep mode (not connected to USB) @DRX=9		100		mA
	LTE-FDD mode Supply current	Sleep mode (not connected to USB) @DRX=6		140		mA
		Sleep mode (not connected to USB) @DRX=8		154		mA
		Sleep mode (not connected to USB) @DRX=9		154		mA
	LTE-TDD mode Supply current	Sleep mode (not connected to USB) @DRX=6		118		mA
		Sleep mode (not connected to USB) @DRX=8		118		mA
		Sleep mode (not connected to USB) @DRX=9		118		mA
	GSM voice calls	EGSM900 @PCL 5		300		mA

		EGSM900 @PCL 12		190		mA
		EGSM900 @PCL 19		160		mA
		GSM850 @PCL 5		300		mA
		GSM850 @PCL 12		190		mA
		GSM850 @PCL 19		160		mA
		DCS1800 @PCL 0		220		mA
		DCS1800 @PCL 7		180		mA
		DCS1800 @PCL 15		160		mA
		WCDMA B2 @max power		650		mA
		WCDMA B4 @max power		650		mA
		WCDMA B5 @max power		600		mA
	LTE data transmission	LTE-FDD B2 @max power		650		mA
		LTE-FDD B4 @max power		650		mA
		LTE-FDD B5 @max power		650		mA
		LTE-FDD B7 @max power		750		mA
		LTE-FDD B12 @max power		650		mA
		LTE-FDD B13 @max power		650		mA
		LTE-FDD B17 @max power		650		mA
		LTE-FDD B25 @max power		650		mA
		LTE-FDD B26 @max power		650		mA
		LTE-FDD B66 @max power		650		mA
		LTE-FDD B71 @max power		650		mA

		TD-LTE B41 @max power		350		mA

7.5 RF Transmit Power

The following table lists the RF transmit power parameters of the H1503BQ module:

Table 43 H1503BQ Module RF Transmit Power

Band	Max	Min
EGSM900	32.5dBm	6dBm
GSM850	32.5dBm	6dBm
DCS1800	29.5dBm	2dBm
WCDMA B2	22.5dBm	-50dBm
WCDMA B4	22.5dBm	-50dBm
WCDMA B5	22.5dBm	-50dBm
LTE-FDD B2	22dBm	-40dBm
LTE-FDD B4	22dBm	-40dBm
LTE-FDD B5	22dBm	-40dBm
LTE-FDD B7	22dBm	-40dBm
LTE-FDD B12	22dBm	-40dBm
LTE-FDD B13	22dBm	-40dBm
LTE-TDD B17	22dBm	-40dBm
LTE-TDD B25	22dBm	-40dBm
LTE-TDD B26	22dBm	-40dBm
LTE-TDD B66	22dBm	-40dBm
LTE-TDD B71	22dBm	-40dBm

TD-LTE B41	22dBm	-40dBm

7.6 RF Receive Sensitivity

The following table lists the RF receive sensitivity of the H1503BQ module:

Table 44 H1503BQ RF Receive Sensitivity

Sensitivity				
Frequency	**Main Set**	**Episode**	**Main Set + Episode**	**3GPP (SIMO)**
EGSM900	-108dBm	/	/	-102dBm
GSM850	-108dBm	/	/	-102dBm
DCS1800	-108dBm	/	/	-102dBm
WCDMA B2	-110dBm	/	/	-104.7dBm
WCDMA B4	-110dBm	/	/	-106.7dBm
WCDMA B5	-110dBm	/	/	-106.7dBm
LTE-FDD B2	-98dBm	-98dBm	-101dBm	-97.3dBm
LTE-FDD B4	-100dBm	-100dBm	-102dBm	-99.3dBm
LTE-FDD B5	-98dBm	-98dBm	-100dBm	-97.3dBm
LTE-FDD B7	-98dBm	-98dBm	-100dBm	-97.3dBm
LTE-FDD B12	-98dBm	-98dBm	-100dBm	-96.3dBm
LTE-FDD B13	-98dBm	-98dBm	-100dBm	-96.3dBm
LTE-TDD B17	-98dBm	-98dBm	-100dBm	-96.3dBm
LTE-TDD B25	-98dBm	-98dBm	-100dBm	-95.8dBm
LTE-TDD B26	-98dBm	-98dBm	-100dBm	-96.8dBm

LTE-TDD B66	-98dBm	-98dBm	-100dBm	-96.3dBm
LTE-TDD B71	-98dBm	-98dBm	-100dBm	-96.3dBm
TD-LTE B41	-98dBm	-98dBm	-100dBm	-97.3dBm

7.7 ESD Protection

In module applications, due to the static electricity generated by human static electricity and live friction between microelectronics, etc., the electrostatic discharge to the module through various ways may cause certain damage to the module, so ESD protection should be paid attention to. ESD protection should be taken during R&D, production, assembly, and testing, especially in product design . For example, anti-static protection should be added at the interface of the circuit design and at the point where it is susceptible to electrostatic discharge damage or influence; Anti-static gloves should be worn during production.

The following table shows the ESD withstand voltages of the important pins of the module:

Table 45 ESD Performance Parameters (Temperature: 25°C, Humidity: 45%)

Test Points	Contact Discharge	Air Discharge	Unit
Power and Ground Interface	+/-5	+/-10	KV
Antenna Interface	+/-5	+/-10	KV
Other Interface	+/-0.5	+/-1	KV

8 Mechanical Dimensions

This section describes the mechanical dimensions of the module, all of which are in millimeters. All dimensions without tolerances are ±0.05mm.

8.1 Module Mechanical Dimensions

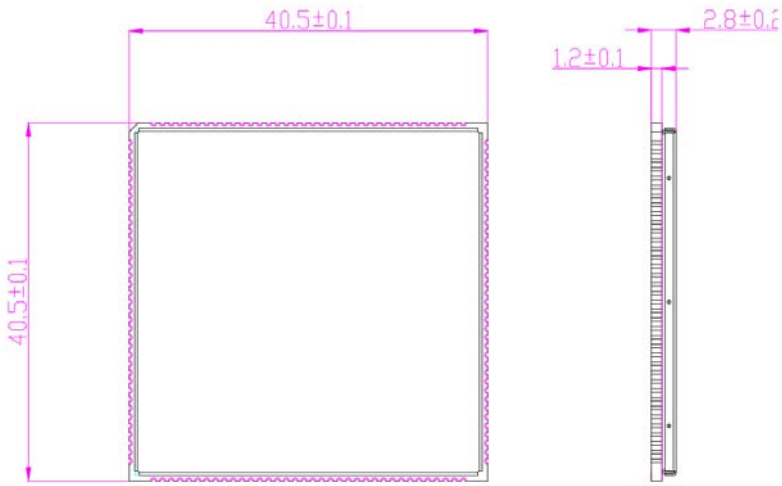

Top view: Side view

Figure 40 H1503BQ Top and Side View Dimensions

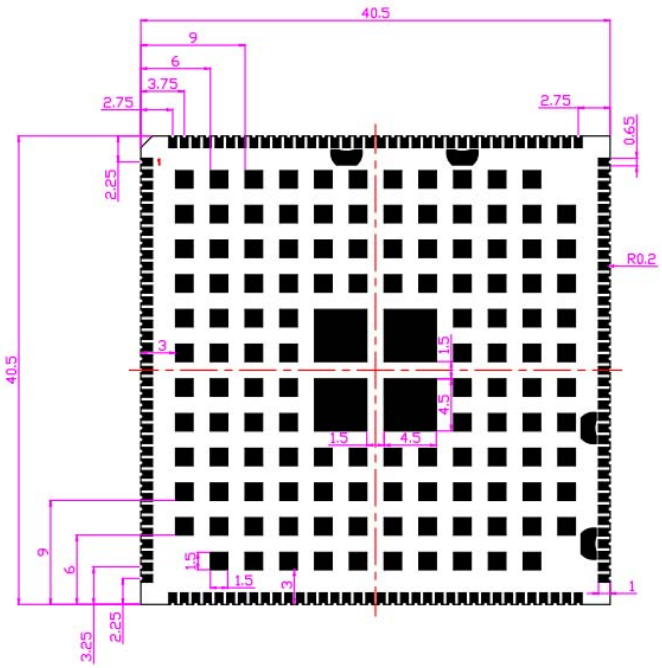

Figure 41 H1503BQ Module Package (Top-down Perspective)

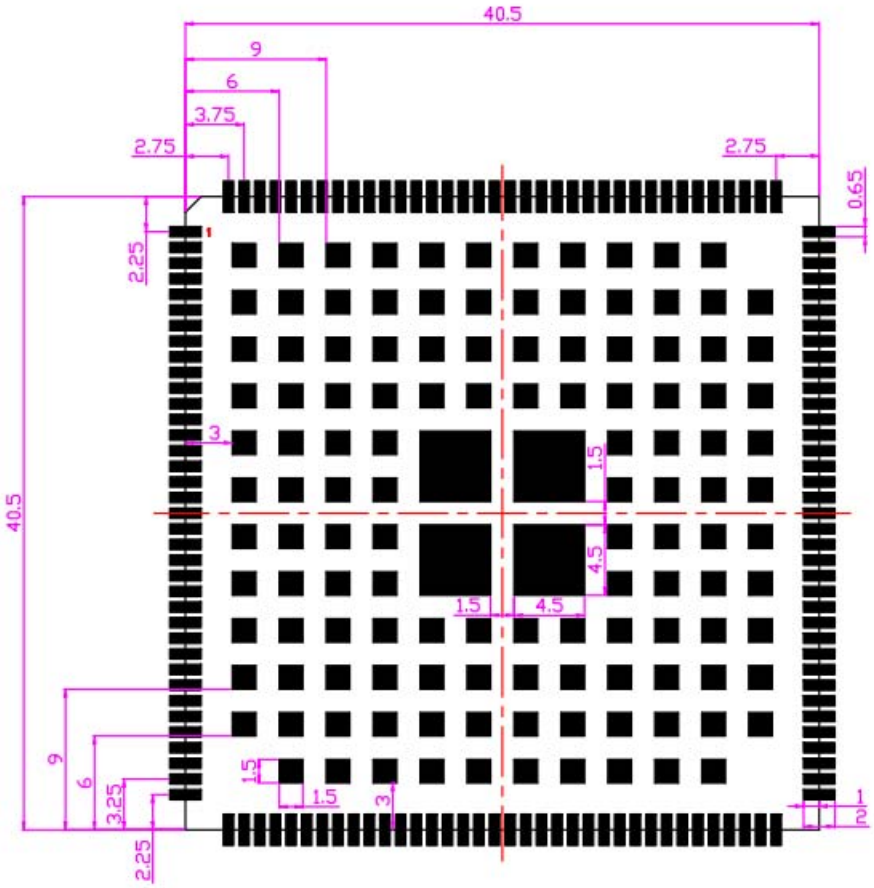

Figure 42 H1503BQ Backplane Package (Top View)

8.2 Top and Bottom View of The Module

Figure 43 Top View of The Module

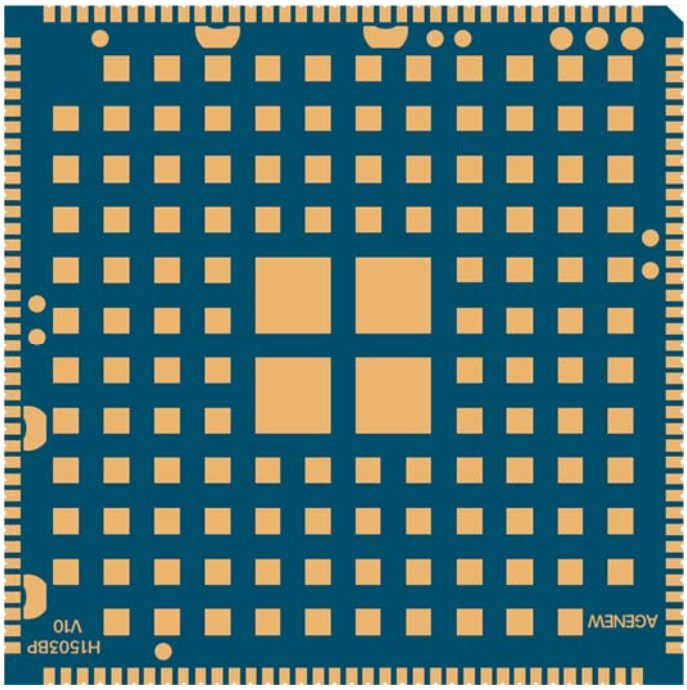

Figure 44 Bottom View of The Module

Remark

The above is a design rendering of the H1503BQ module. For more accurate product appearance and label information, please refer to the physical module of Agenewtech.

9 Storage, Production and Packaging

9.1 Storage

H1503BQ Shipped in vacuum-sealed bags. The module has a humidity sensitivity level of 3 (MSL 3) and its storage must meet the following conditions:

When the ambient temperature is below 40 degrees Celsius and the air humidity is below 90%, the components can be stored in a vacuum-sealed bag for 12 months.

After the vacuum-sealed bag is opened, the module can be directly reflowed or other high-temperature processes if the following conditions are met:

- The humidity of the air stored in the module is less than 10%.
- The ambient temperature of the module is less than 30 degrees Celsius, the air humidity is less than 60%, and the factory can complete the placement within 168 hours.

The module needs to be baked before placement if it is:

- At an ambient temperature of 23 degrees Celsius (5 degrees Celsius fluctuations are allowed), the humidity indicator card shows that the humidity is greater than 10%.
- When the vacuum-sealed bag is opened, the ambient temperature of the module is below 30 degrees Celsius, and the air humidity is less than 60%. Patches are completed in a few hours

For the module to bake, bake at 120 degrees Celsius (allowing 5 degrees Celsius fluctuations) for 8 hours.

Remark

The packaging of the module cannot withstand high temperature baking. Therefore, remove the module packaging before the module bakes. If only a short baking time is required, refer to the IPC/JEDECJ-STD-033 specification.

9.2 Production Welding

In order to ensure the quality of the module printing paste, the thickness of the stencil corresponding to the pad part of the H1503BQ module is recommended to be 0.18mm~0.20mm. LGA pads, it is recommended to reduce the amount of solder paste to avoid short circuits. Please refer to the documentation for details.

The recommended reflow temperature is 240ºC~245ºC, and the maximum should not

exceed 245ºC. In order to avoid damage to the module due to repeated heating, it is highly recommended that customers reflow the first side of the PCB before attaching the module. The recommended furnace temperature curve (lead-free SMT reflow soldering) and related parameters are shown in the chart below

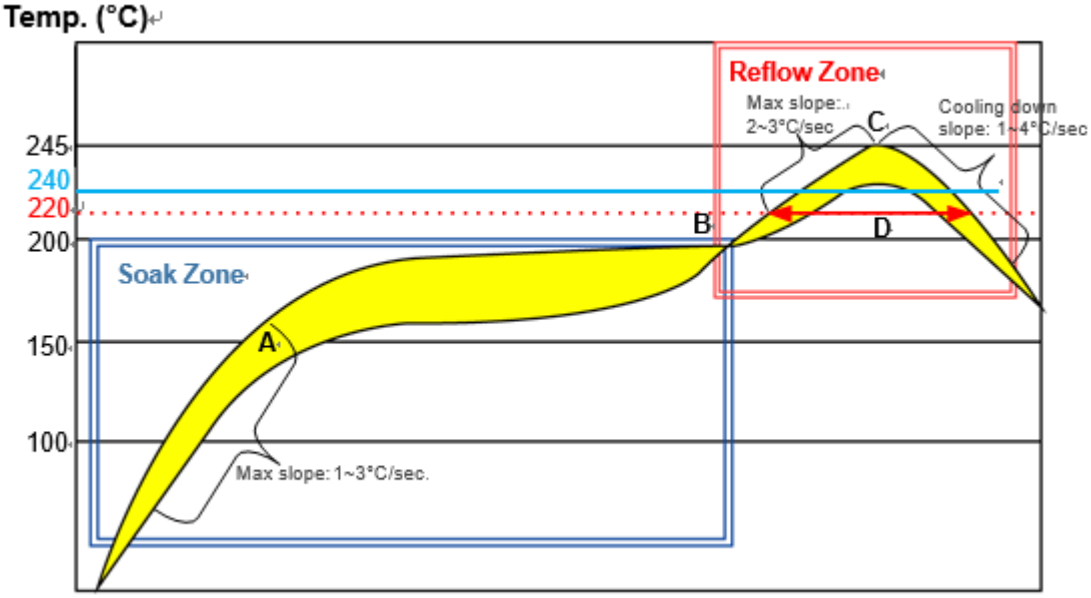

Figure 45 Recommended Reflow Temperature Profile

Table 46 Recommended Furnace Temperature Test Control Requirements

Project	Recommended Values
Endothermic Zone (Immersion Zone)	
Maximum ramp of temperature rise	1°C /sec ~ 3°C /sec
Constant temperature time (time between A and B: 150°C~200°C period)	60 sec ~ 120 sec
Reflow Soldering Zone (Reflow Zone)	
Maximum ramp of temperature rise	2°C sec ~ 3°C /sec
Reflux time (D: period over 220°C)	40 sec ~ 60 sec
Maximum temperature	240°C ~ 245°C
Cooling slope	1°C /sec ~ 4°C /sec
Number of Reflows	

Maximum number of reflows	1 time

9.3 Packaging

H1503BQ modules are packed in trays and sealed with anti-static bags. It is recommended to open the package before actual production and use. Each pallet contains 20 H1503BQ modules. The specific specifications are as follows:

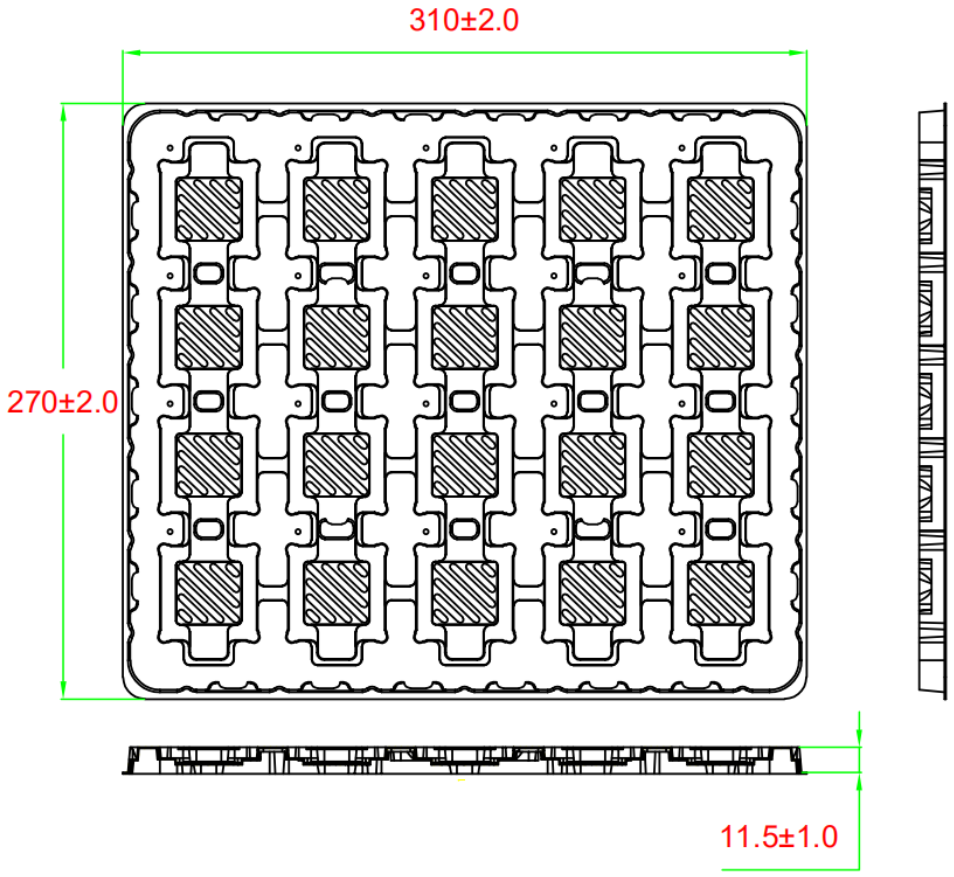

Figure 46 Pallet Size (mm)

10 Appendix A

Table 47 Abbreviations for Terms

Technical Terms	Description
ADC	Analog-to-digital converters
AMR	Adaptive multi-rate
bps	Bits per second
CS	Coding schemes
CSD	Circuit-switched data
CTS	Clear sending
DRX	Intermittent reception
EFR	Enhance full rate
EGSM	Extended GSM900 bands (including standard GSM900 bands)
ESD	Electrostatic discharge
FRI	Full rate
GMSK	Gaussian minimum shift keying
GPS	global positioning system
GPU	Graphics Processing Unit
GSM	Global System for Mobile Communications
HR	Half rate
HSDPA	High-speed downlink packet access

HSPA	High-speed packet access
I/O	Input and output
IQ	In-phase and orthogonal
LCD	LCD
LCM	LCD module
LED	Light-emitting diodes
LNA	Low noise amplifier
LRA	Linear resonant actuators
MIPI	Mobile Industry Processor Interface
PCB	Printed circuit boards
PDU	Protocol Data Unit
PMI	Power management interface
PMU	Power management unit
PSK	Phase-shift keying
QAM	Quadrature amplitude modulation
QPSK	Quadrature phase shift keying
RF	rf
RTC	Real-time clock chips
Rx	reception
SMS	Short message service
IN	Terminal
TX	Transmission direction

UART	Universal asynchronous receivers and transmitters
UMTS	Universal mobile communication system
YES	User identification card
Vmax	Maximum voltage value
Vnorm	Normal voltage value
Vmin	Minimum voltage value
WE	Voltage input
VIHmax	Maximum input high voltage value
INAUGURATION	Minimum input high voltage value
VILmax	Maximum input low voltage value
VILmin	Minimum input low voltage value
VImax	Absolute maximum input voltage value
VImin	The absolute minimum input voltage value
VO	Voltage output
VOHmax	The maximum output high voltage value
VOHmin	Minimum output high voltage value
VOLmax	The maximum output low voltage value
VOLmin	Minimum output low voltage value
WCDMA	Wideband code division multiple access technology

FCC Statement

This device complies with part 15 of the FCC Rules. Operation is subject to the following two conditions:

(1) This device may not cause harmful interference, and

(2) this device must accept any interference received, including interference that may cause undesired operation.

Any Changes or modifications not expressly approved by the party responsible for compliance could void the user's authority to operate the equipment.

The modular can be installed or integrated in mobile or fix devices only. This modular cannot be installed in any portable device.

Any company of the host which install this modular with Single modular approval should perform the test of radiated emissionand spurious emission according to FCC part 15C : 15.247 and 15.209 requirement, Only if the test result comply with FCC part 15C : 15.247 and 15.209 requirement, then the host can be sold legally.

FCC Radiation Exposure Statement

This modular complies with FCC RF radiation exposure limits set forth for an uncontrolled environment. This transmitter must not be co-located or operating in conjunction with any other antenna or transmitter. This modular must be installed and operated with a minimum distance of 20 cm between the radiator and user body.

Note: This equipment has been tested and found to comply with the limits for a Class B digital device, pursuant to part 15 of the FCC Rules. These limits are designed to provide reasonable protection against harmful interference in a residential installation. This equipment generates uses and can radiate radio frequency energy and, if not installed and used in accordance with the instructions, may cause harmful interference to radio communications. However, there is no guarantee that interference will not occur in a particular installation. If this equipment does cause harmful interference to radio or television reception, which can be determined by turning the equipment off and on, the user is encouraged to try to correct the interference by one or more of the following measures:

-Reorient or relocate the receiving antenna.

-Increase the separation between the equipment and receiver.

-Connect the equipment into an outlet on a circuit different from that to which the receiver is connected.

-Consult the dealer or an experienced radio/TV technician for help.

OEM INTEGRATION INSTRUCTIONS:

This device is intended only for OEM integrators under the following conditions:

The module must be installed in the host equipment such that 20 cm is maintained between the antenna and users, and the transmitter module may not be co-located with any other transmitter or antenna. The module shall be only used with the internal on-board antenna that has been originally tested and certified with this module. External antennas are not supported. As long as these 3 conditions above are met, further transmitter test will not be required.

However, the OEM integrator is still responsible for testing their end-product for any additional compliance requirements required with this module installed (for example, digital device emissions, PC peripheral requirements, etc.). The end-product may need Verification testing, Declaration of Conformity testing, a Permissive Class II Change or new Certification. Please involve a FCC certification specialist in order to determine what will be exactly applicable for the end-product.

Validity of using the module certification:

In the event that these conditions cannot be met (for example certain laptop configurations or co-location with another transmitter), then the FCC/IC authorization for this module in combination with the host equipment is no longer considered valid and the FCC ID/IC of the module cannot be used on the final product. In these circumstances, the OEM integrator will be responsible for re-evaluating the end product (including the transmitter) and obtaining a separate FCC authorization. In such cases, please involve a FCC/IC certification specialist in order to determine if a Permissive Class II Change or new Certification is required.

Upgrade Firmware:

The software provided for firmware upgrade will not be capable to affect any RF parameters as certified for the FCC/IC for this module, in order to prevent compliance issues.

End product labeling:

This transmitter module is authorized only for use in device where the antenna may be installed such that 20 cm may be maintained between the antenna and users. The final end product must be labeled in a visible area with the following: “Contains FCC ID: 2BVA8-H1503BQ”.

Information that must be placed in the end user manual:

The OEM integrator has to be aware not to provide information to the end user regarding how to install or remove this RF module in the user's manual of the end product which integrates this module. The end user manual shall include all required regulatory information/warning as show in this manual.

2.2 List of applicable FCC rules
List the FCC rules that are applicable to the modular transmitter. These are the rules that specifically establish the bands of operation, the power, spurious emissions, and operating fundamental frequencies.

DO NOT list compliance to unintentional-radiator rules (Part 15 Subpart B/ICES-003) since that is not a condition of a module grant that is extended to a host manufacturer. See also Section 2.10 below concerning the need to notify host manufacturers that further testing is required.
Explanation: This module meets the requirements of FCC part 15C(15.247), FCC part 15E(15.407).

2.3 Summarize the specific operational use conditions
Describe use conditions that are applicable to the modular transmitter, including for example any limits on antennas, etc. For example, if point-to-point antennas are used that require reduction in power or compensation for cable loss, then this information must be in the instructions. If the use condition limitations extend to professional users, then instructions must state that this information also extends to the host manufacturer's instruction manual. In addition, certain information may also be needed, such as peak gain per frequency band and minimum gain, specifically for master devices in 5 GHz DFS bands.
Explanation: The EUT is Spring antenna.

2.4 Limited module procedures
If a modular transmitter is approved as a "limited module," then the module manufacturer is responsible for approving the host environment that the limited module is used with. The manufacturer of a limited module must describe, both in the filing and in the installation instructions, the alternative means that the limited module manufacturer uses to verify that the host meets the necessary requirements to satisfy the module limiting conditions.
A limited module manufacturer has the flexibility to define its alternative method to address the conditions that limit the initial approval, such as: shielding, minimum signaling amplitude, buffered modulation/data inputs, or power supply regulation. The alternative method could include that the limited module manufacturer reviews detailed test data or host designs prior to giving the host manufacturer approval.
This limited module procedure is also applicable for RF exposure evaluation when it is necessary to demonstrate compliance in a specific host. The module manufacturer must state how control of the product into which the modular transmitter will be installed will be maintained such that full compliance of the product is always ensured. For additional hosts other than the specific host originally granted with a limited module, a Class II permissive change is required on the module grant to register the additional host as a specific host also approved with the module.
Explanation: The Module is not a limited module.

2.5 Trace antenna designs
For a modular transmitter with trace antenna designs, see the guidance in Question 11 of KDB Publication 996369 D02 FAQ – Modules for Micro-Strip Antennas and traces. The integration information shall include for the TCB review the integration instructions for the following aspects: layout of trace design, parts list (BOM), antenna, connectors, and isolation requirements.

a) Information that includes permitted variances (e.g., trace boundary limits, thickness, length, width, shape(s),
dielectric constant, and impedance as applicable for each type of antenna);

b) Each design shall be considered a different type (e.g., antenna length in multiple(s) of frequency,the wavelength, and antenna shape (traces in phase) can affect antenna gain and must be considered); c) The parameters shall be provided in a manner permitting host manufacturers to design the printed circuit (PC) board layout;

d) Appropriate parts by manufacturer and specifications;

e) Test procedures for design verification; and

f) Production test procedures for ensuring compliance.

The module grantee shall provide a notice that any deviation(s) from the defined parameters of the antenna trace, as described by the instructions, require that the host product manufacturer must notify the module grantee that they wish to change the antenna trace design. In this case, a Class II permissive change application is required to be filed by the grantee, or the host manufacturer can take responsibility through the change in FCC ID (new application) procedure followed by a Class II permissive change application.

Explanation: Yes, The module with Spring antenna designs, and This manual has been shown the layout of trace design, antenna, connectors, and isolation requirements.

2.6 RF exposure considerations

It is essential for module grantees to clearly and explicitly state the RF exposure conditions that permit a host product manufacturer to use the module. Two types of instructions are required for RF exposure information: (1) to the host product manufacturer, to define the application conditions (mobile, portable – xx cm from a person's body); and (2) additional text needed for the host product manufacturer to provide to end users in their end-product manuals. If RF exposure statements and use conditions are not provided, then the host product manufacturer is required to take responsibility of the module through a change in FCC ID/IC (new application).

Explanation: This module complies with FCC RF radiation exposure limits set forth for an uncontrolled environment, This equipment should be installed and operated with a minimum distance of 20 centimeters between the radiator and your body." This module is designed to comply with the FCC statement, "Contains Transmitter Module FCC ID: 2BVA8-H1503BQ Or Contains FCC ID: 2BVA8-H1503BQ".

2.7 Antennas

A list of antennas included in the application for certification must be provided in the instructions. For modular transmitters approved as limited modules, all applicable professional installer instructions must be included as part of the information to the host product manufacturer. The antenna list shall also identify the antenna types (monopole, PIFA, dipole, etc. (note that for example an "omni-directional antenna" is not considered to be a specific "antenna type")).

For situations where the host product manufacturer is responsible for an external connector, for example with an RF pin and antenna trace design, the integration instructions shall inform the installer that unique antenna connector must be used on the Part 15 authorized transmitters used in the host product. The module manufacturers shall provide a list of acceptable unique connectors.

Explanation: The EUT has a Dipole antenna, and the antenna utilizes an RA-SMA connector, making it difficult to replace.

Brand	Model Name	Antenna Type	Connector	Gain (dBi)	Note
agenew	H1503BQ	Spring	N/A	2.4G:0.5 5G:1.2 GSM850: -1.0 GSM 1900: 0.8	2400-2500MHz 5150-5900MHz GSM850: 824-849 MHz GSM1900: 1850-1910 MHz

				WCDMA B2: 0.8 WCDMA B:4: 0.8 WCDMA B5: -1.1 LTE B2: 0.8 LTE B4: 0.8 LTE B5: -1.1 LTE B7: 1.2 LTE B12: -2.1 LTE B13: -1.4 LTE B17: -2.1 LTE B25: 0.8 LTE B26:-1.1 LTE B41 1.2 LTE B66: 0.2 LTE B71:-2.5	WCDMA B2: 1850-1910 MHz WCDMA B5: 824-849 MHz WCDMA B4: 1710-1755 MHz LTE Band 2:1850~1910MHz LTE Band 4:1710~1755MHz LTE Band 5:824~849MHz LTE Band 7:2500~2570MHz LTE Band 12:699~716MHz LTE Band 13:777~787MHz LTE Band 17: 704-716 MHz LTE Band 25:1850~1915MHz LTE Band 26 Part 90:814~824MHz LTE Band 26 Part 22:824-849 MHz LTE Band 41: 2496-2690MHz LTE Band 66:1710~1780MHz LTE Band 71: 663-698 MHz

2.8 Label and compliance information

Grantees are responsible for the continued compliance of their modules to the FCC/IC rules. This includes advising host product manufacturers that they need to provide a physical or e-label stating "Contains FCC ID" with their finished product. See Guidelines for Labeling and User Information for RF Devices – KDB Publication 784748.

Explanation: The host system using this module, should have label in a visible area indicated the following texts: "Contains Transmitter Module FCC ID: 2BVA8-H1503BQ Or Contains FCC ID: 2BVA8-H1503BQ".

2.9 Information on test modes and additional testing requirements5

Additional guidance for testing host products is given in KDB Publication 996369 D04 Module Integration Guide. Test modes should take into consideration different operational conditions for a stand-alone modular transmitter in a host, as well as for multiple simultaneously transmitting modules or other transmitters in a host product.

The grantee should provide information on how to configure test modes for host product evaluation for different operational conditions for a stand-alone modular transmitter in a host, versus with multiple, simultaneously transmitting modules or other transmitters in a host.

Grantees can increase the utility of their modular transmitters by providing special means, modes, or instructions that simulates or characterizes a connection by enabling a transmitter. This can greatly simplify a host manufacturer's determination that a module as installed in a host complies with FCC/IC requirements.

Explanation: Top band can increase the utility of our modular transmitters by providing instructions that simulates or characterizes a connection by enabling a transmitter.

2.10 Additional testing, Part 15 Subpart B/ICES-003 disclaimer
The grantee should include a statement that the modular transmitter is only FCC authorized for the specific rule parts (i.e., FCC/IC transmitter rules) listed on the grant, and that the host product manufacturer is responsible for compliance to any other FCC/IC rules that apply to the host not covered by the modular transmitter grant of certification. If the grantee markets their product as being Part 15 Subpart B/ICES-003 compliant (when it also contains unintentional-radiator digital circuity), then the grantee shall provide a notice stating that the final host product still requires Part 15 Subpart B/ICES-003 compliance testing with the modular transmitter installed.
Explanation: The module without unintentional-radiator digital circuity, so the module does not require an evaluation by FCC Part 15 Subpart B. The host shoule be evaluated by the FCC Subpart B.