Shenzhen CTA Testing Technology Co., Ltd.
Room 106, Building 1, Yibaolai Industrial Park, Qiaotou Community, Fuhai Street, Bao'an District, Shenzhen, China

TEST REPORT

FCC Part 27

Report Reference No.....:	**CTA26062500302**
FCC ID.....:	**2BVG4MP02**
Compiled by (position+printed name+signature) .:	File administrators Zoey Cao
Supervised by (position+printed name+signature) .:	Project Engineer Ace Chai
Approved by (position+printed name+signature) .:	RF Manager Eric Wang
Date of issue.....:	Jul. 05, 2026

Testing Laboratory Name .....:	**Shenzhen CTA Testing Technology Co., Ltd.**
Address .....:	Room 106, Building 1, Yibaolai Industrial Park, Qiaotou Community, Fuhai Street, Bao'an District, Shenzhen, China

Applicant's name .....:	**BEIJING MERA TECHNOLOGY Co., Ltd**
Address .....:	Building 1, Mingliang Science Park, 88 Zhuguang North Road, Taoyuan Sub - district, Nanshan District, Shenzhen City, Guangdong Province, China

Test specification .....:	
Standard .....:	**FCC CFR Title 47 Part 2, Part 27** **ANSI/TIA-603-E-2016** **KDB 971168 D01**

Shenzhen CTA Testing Technology Co., Ltd. All rights reserved.
This publication may be reproduced in whole or in part for non-commercial purposes as long as the Shenzhen CTA Testing Technology Co., Ltd. is acknowledged as copyright owner and source of the material. Shenzhen CTA Testing Technology Co., Ltd. takes no responsibility for and will not assume liability for damages resulting from the reader's interpretation of the reproduced material due to its placement and context.

Test item description.....:	**OxiLeash Pet GPS Tracker**
Trade Mark .....:	N/A
Manufacturer .....:	BEIJING MERA TECHNOLOGY Co., Ltd
Model/Type reference.....:	MP02
Listed Models .....:	N/A
Ratings .....:	Input: 5V⎓ 1.0A Battery: 3.7V 600mAh 2.22Wh
Modulation .....:	QPSK, 16QAM
Frequency.....:	E-UTRA Band 4
Result.....:	**PASS**

TEST REPORT

Equipment under Test	:	OxiLeash Pet GPS Tracker
Model /Type	:	MP02
Listed Models	:	N/A
Applicant	:	**BEIJING MERA TECHNOLOGY Co., Ltd**
Address	:	Building 1, Mingliang Science Park, 88 Zhuguang North Road, Taoyuan Sub - district, Nanshan District, Shenzhen City, Guangdong Province, China
Manufacturer	:	**BEIJING MERA TECHNOLOGY Co., Ltd**
Address	:	Building 1, Mingliang Science Park, 88 Zhuguang North Road, Taoyuan Sub - district, Nanshan District, Shenzhen City, Guangdong Province, China

Test result	**Pass ***

* In the configuration tested, the EUT complied with the standards specified page 4.

The test report merely corresponds to the test sample.
It is not permitted to copy extracts of these test result without the written permission of the test laboratory.

Contents

1 SUMMARY 4
1.1 TEST STANDARDS 4
1.2 Test Description 4
1.3 Address of the test laboratory 5
1.4 Test Facility 5
1.5 Statement of the measurement uncertainty 5
2 GENERAL INFORMATION 6
2.1 Environmental conditions 6
2.2 General Description of EUT 6
2.3 Description of Test Modes and Test Frequency 6
2.4 Equipments Used during the Test 7
2.5 Related Submittal(s) / Grant (s) 8
2.6 Modifications 8
3 TEST CONDITIONS AND RESULTS 9
3.1 Output Power 9
3.2 Peak-to-Average Ratio (PAR) 16
3.3 Occupied Bandwidth and Emission Bandwidth 17
3.4 Band Edge compliance 18
3.5 Spurious Emission 19
3.6 Frequency Stability under Temperature & Voltage Variations 23
4 Test Setup Photos of the EUT 25
5 Photos of the EUT 26

1 SUMMARY

1.1 TEST STANDARDS

The tests were performed according to following standards:
FCC Part 2: FREQUENCY ALLOCA-TIONS AND RADIO TREATY MAT-TERS; GENERAL RULES AND REG-ULATIONS
FCC Part 27 : MISCELLANEOUS WIRELESS COMMUNICATIONS SERVICES
ANSI/TIA-603-E-2016: Land Mobile FM or PM Communications Equipment Measurement and Performance Standards.
ANSI C63.26-2015: IEEE/ANSI Standard for Compliance Testing of Transmitters Used in Licensed Radio Services
FCCKDB971168D01 Power Meas License Digital Systems

1.2 Test Description

Test Item	Section in CFR 47	Result
RF Output Power	Part 2.1046 Part 27.50(d)(4)	Pass
Peak-to-Average Ratio	Part 27.50(d)(4)	Pass
99% & -26 dB Occupied Bandwidth	Part 2.1049 Part 27.53(h)	Pass
Spurious Emissions at Antenna Terminal	Part 2.1051 Part 27.53(h)	Pass
Field Strength of Spurious Radiation	Part 2.1053 Part 27.53(h)	Pass
Out of band emission, Band Edge	Part 2.1051 Part 27.53(h)	Pass
Frequency stability	Part 2.1055 Part 27.54	Pass

1.3 Address of the test laboratory

Shenzhen CTA Testing Technology Co., Ltd.
Room 106, Building 1, Yibaolai Industrial Park, Qiaotou Community,Fuhai Street, Bao'an District, Shenzhen, China

The 3m-Semi anechoic test site fulfils CISPR 16-1-4 according to ANSI C63.4:2014 and CISPR 16-1-4:2010 SVSWR requirement for radiated emission above 1GHz.

1.4 Test Facility

The test facility is recognized, certified, or accredited by the following organizations:

FCC-Registration No.: 517856 Designation Number: CN1318

Shenzhen CTA Testing Technology Co., Ltd. has been listed on the US Federal Communications Commission list of test facilities recognized to perform electromagnetic emissions measurements.

Industry Canada Registration Number. Is: 27890 CAB identifier: CN0127

The Laboratory has been registered by Certification and Engineering Bureau of Industry Canada for radio equipment testing.

A2LA-Lab Cert. No.: 6534.01

Shenzhen CTA Testing Technology Co., Ltd. has been listed by American Association for Laboratory Accreditation to perform electromagnetic emission measurement.

The 3m-Semi anechoic test site fulfils CISPR 16-1-4 according to ANSI C63.10 and CISPR 16-1-4:2010.

1.5 Statement of the measurement uncertainty

The data and results referenced in this document are true and accurate. The reader is cautioned that there may be errors within the calibration limits of the equipment and facilities. The measurement uncertainty was calculated for all measurements listed in this test report acc. to TR-100028-01"Electromagnetic compatibilityand Radio spectrum Matters (ERM);Uncertainties in the measurementof mobile radio equipment characteristics;Part 1"and TR-100028-02 "Electromagnetic compatibilityand Radio spectrum Matters (ERM);Uncertainties in the measurementof mobile radio equipment characteristics;Part 2 " and is documented in the Shenzhen CTA Testing Technology Co., Ltd. quality system acc. to DIN EN ISO/IEC 17025. Furthermore, component and process variability of devices similar to that tested may result in additional deviation. The manufacturer has the sole responsibility of continued compliance of the device.

Hereafter the best measurement capability for Shenzhen CTA Testing Technology Co., Ltd. is reported:

Test	Range	Measurement Uncertainty	Notes
Radiated Emission	9KHz~30MHz	3.02 dB	(1)
Radiated Emission	30~1000MHz	4.06 dB	(1)
Radiated Emission	1~18GHz	5.14 dB	(1)
Radiated Emission	18-40GHz	5.38 dB	(1)
Conducted Disturbance	0.15~30MHz	2.14 dB	(1)
Output Peak power	30MHz~18GHz	0.55 dB	(1)
Power spectral density	/	0.57 dB	(1)
Spectrum bandwidth	/	1.1%	(1)
Radiated spurious emission (30MHz-1GHz)	30~1000MHz	4.10 dB	(1)
Radiated spurious emission (1GHz-18GHz)	1~18GHz	4.32 dB	(1)
Radiated spurious emission (18GHz-40GHz)	18-40GHz	5.54 dB	(1)
Time	/	±2%	(1)

(1) This uncertainty represents an expanded uncertainty expressed at approximately the 95% confidence level using a coverage factor of k=1.96.

2 GENERAL INFORMATION

2.1 Environmental conditions

Date of receipt of test sample	:	Jun. 25, 2026
Testing commenced on	:	Jun. 25, 2026
Testing concluded on	:	Jul. 05, 2026

During the measurement the environmental conditions were within the listed ranges:

Normal Temperature:	25°C
Relative Humidity:	55 %
Air Pressure:	101 kPa

2.2 General Description of EUT

Product Name:	OxiLeash Pet GPS Tracker
Model/Type reference:	MP02
Power supply:	Input: 5V⎓ 1.0A Battery: 3.7V 600mAh 2.22Wh
Adapter information：	Model: J121L-0501000UU Input: AC 100-240V 50/60Hz 0.6A Output: DC 5.0V 1.0A 5.0W
Hardware version:	TA207_MB_V1.3
Software version:	TA207136CMP156NA003_20260519_002523
Testing sample ID：	CTA260625003-1# (Engineer sample) CTA260625003-2# (Normal sample)
LTE	
Operation Band:	E-UTRA Band 4
Support Bandwidth:	Band 4: 1.4MHz, 3MHz, 5MHz,10MHz, 15MHz, 20MHz
TX/RXFrequency Range:	E-UTRA Band 4(TX:1710 MHz -1755MHz,RX: 2110-2155MHz)
Modulation Type:	QPSK, 16QAM
Category:	Cat 1
Antenna Type:	PIFA antenna
Antenna Gain:	-1.46dBi

Note: For more details, refer to the user's manual of the EUT.

2.3 Description of Test Modes and Test Frequency

The EUT has been tested under typical operating condition. The CMW500 used to control the EUT staying in continuous transmitting and receiving mode for testing. Regards to the frequency band operation: the lowest、middle and highest frequency of channel were selected to perform the test, then shown on this report.

2.4 Equipments Used during the Test

Item.	Test Equipment	Manufacturer	Model No.	Equipment No.	Calibration Date	Calibration Due Date
RF Radiation Test Equipment						
☒1	EMI Test Receiver	R&S	ESCI	CTA-306	2025/07/30	2026/07/29
☒2	Spectrum analyzer	R&S	FSV40-N	CTA-344	2026/05/16	2027/05/15
☒3	Ultra-Broadband Antenna	Schwarzbeck	VULB9163	CTA-310	2023/10/17	2026/10/16
☒4	Horn Antenna	Schwarzbeck	BBHA 9120D	CTA-309	2023/10/13	2026/10/12
☒5	Loop Antenna	Zhinan	ZN30900C	CTA-311	2023/10/17	2026/10/16
☒6	Horn Antenna	Schwarzbeck	BBHA 9170	CTA-346	2025/05/18	2028/05/17
☒7	Amplifier	Schwarzbeck	BBV9745	CTA-312	2025/07/30	2026/07/29
☒8	Amplifier	Tonscend	TAP-011840	CTA-313	2025/07/30	2026/07/29
☒9	Amplifier	SKET	LNPA 1840G-50	CTA-345	2026/05/16	2027/05/15
☒10	6dB attenuator	Shanghaihuaxiang	GZL-TS5-6-6	CTA-347	2026/05/16	2027/05/15
☒11	RF cable	SKET	RF Cable (9kHz-1GHz)	CTA-360	2025/09/25	2026/09/24
☒12	RF cable	SKET	RF Cable (1GHz-18GHz)	CTA-361	2025/09/25	2026/09/24
☒13	Coaxialcable (1GHz-40GHz)	SKET	RE-04-D	CTA-348	2026/05/16	2027/05/15
☒14	Coaxialcable (1GHz-40GHz)	SKET	RE-04-M	CTA-349	2026/05/16	2027/05/15
☒15	Coaxialcable (1GHz-40GHz)	SKET	RE-04-L	CTA-350	2026/05/16	2027/05/15
☒16	Temperature and humidity meter	Chigo	ZG-7020	CTA-328	2025/07/31	2026/07/30
☐17	2.4GFilter	HX Microwave	HXLBQ-DZA61	CTA-365	2025/07/31	2026/07/30
☐18	5GFilter	CONCEPT	CNF05150M05850Q16A	CTA-366	2025/07/31	2026/07/30
☒19	High-Pass Filter	XingBo	XBLBQ-GTA18	CTA-402	2025/07/30	2026/07/29
☒20	High-Pass Filter	XingBo	XBLBQ-GTA27	CTA-403	2025/07/30	2026/07/29
☒21	High-Pass Filter	XingBo	XBLBQ-GTA10	CTA-364	2025/07/30	2026/07/29
☒22	WIDEBAND RADIO COMMUNICATION TESTER	R&S	CMW500	CTA-302	2025/07/30	2026/07/29
☒23	EMI Test Software	Tonscend	TS®JS32-RE	5.0.0.2	N/A	N/A
RF Conducted Test Equipment						
☒1	Spectrum Analyzer	Agilent	N9020A	CTA-342	2025/07/30	2026/07/29
☐2	Spectrum analyzer	R&S	FSV40-N	CTA-344	2026/05/16	2027/05/15
☒3	RF Coaxial Cable	SKET	RF Cable (9kHz-40GHz)	CTA-368	2025/07/30	2026/07/29
☒4	Temperature and humidity meter	ZG-7020	Chigo	CTA-329	2025/07/31	2026/07/30
☒5	Programmable Constant Temperature And Humidity Test Chamber	DONGGUAN JINGYU	HT-H-408	CTA-053	2025/07/30	2026/07/29
☐6	Vector Signal generator	Agilent	N5182A	CTA-305	2025/07/30	2026/07/29
☐7	Analog Signal Generator	R&S	E4421B	CTA-304	2025/07/30	2026/07/29

☒8	WIDEBAND RADIO COMMUNICATION TESTER	R&S	CMW500	CTA-302	2025/07/30	2026/07/29
☒9	Automatic control unit	Tonscend	JS0806-2	CTA-351	2025/07/30	2026/07/29
☒10	RF Test Software	Tonscend	TS®JS1120-3	3.1.65	N/A	N/A
☒11	RF Test Software	Tonscend	TS®JS1120	3.1.46	N/A	N/A
☒12	RF Connection Cable	N/A	N/A	1#	Each time	N/A

2.5 Related Submittal(s) / Grant (s)

This submittal(s) (test report) is intended for filing to comply with of the FCC Part 27 Rules.

2.6 Modifications

No modifications were implemented to meet testing criteria.

3 TEST CONDITIONS AND RESULTS

3.1 Output Power

LIMIT

According to §27.50 (d) (4): Fixed, mobile, and portable (hand- held) stations operating in the 1710–1755 MHz band are limited to 1 watt EIRP.

TEST CONFIGURATION

Conducted Power Measurement

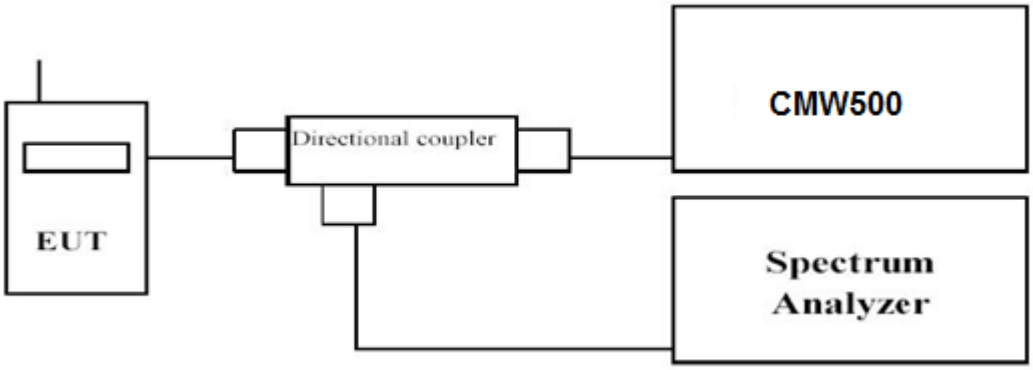

Radiated Power Measurement:

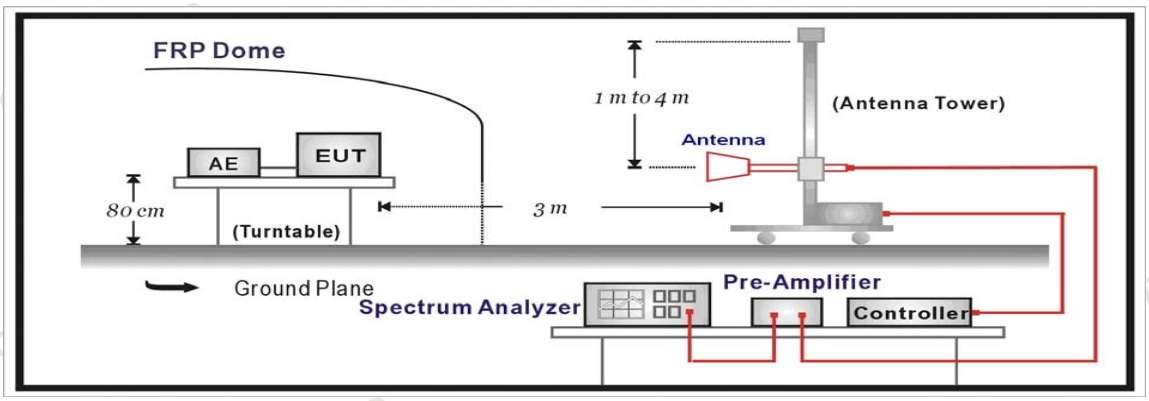

TEST PROCEDURE

The EUT was setup according to ANSI/TIA-603-E-2016

Conducted Power Measurement:

a) Place the EUT on a bench and set it in transmitting mode.
b) Connect a low loss RF cable from the antenna port to a spectrum analyzer and CMW500 by a Directional Couple.
c) EUT Communicate with CMW500 then selects a channel for testing.
d) Add a correction factor to the display of spectrum, and then test.

Radiated Power Measurement:

a) The EUT shall be placed at the specified height on a support, and in the position closest to normal use as declared by provider.
b) The test antenna shall be oriented initially for vertical polarization and shall be chosen to correspond to the frequency of the transmitter
c) The output of the test antenna shall be connected to the measuring receiver.
d) The transmitter shall be switched on and the measuring receiver shall be tuned to the frequency of the transmitter under test.
e) The test antenna shall be raised and lowered through the specified range of height until a maximum signal level is detected by the measuring receiver.

f) The transmitter shall then be rotated through 360°in the horizontal plane, until the maximum signal level is detected by the measuring receiver.
g) The test antenna shall be raised and lowered again through the specified range of height until a maximum signal level is detected by the measuring receiver.
h) The maximum signal level detected by the measuring receiver shall be noted.
i) The transmitter shall be replaced by a substitution antenna.
j) The substitution antenna shall be orientated for vertical polarization and the length of the substitution antenna shall be adjusted to correspond to the frequency of the transmitter.
k) The substitution antenna shall be connected to a calibrated signal generator.
l) If necessary, the input attenuator setting of the measuring receiver shall be adjusted in order to increase the sensitivity of the measuring receiver.
m) The test antenna shall be raised and lowered through the specified range of height to ensure that the maximum signal is received.
n) The input signal to the substitution antenna shall be adjusted to the level that produces a level detected by the measuring receiver, that is equal to the level noted while the transmitter radiated power was measured, corrected for the change of input attenuator setting of the measuring receiver.
o) The measurement shall be repeated with the test antenna and the substitution antenna orientated for horizontal polarization.
p) The measure of the effective radiated power is the larger of the two levels recorded at the input to the substitution antenna, corrected for gain of the substitution antenna if necessary.
q) Test site anechoic chamber refer to ANSI C63.4.

TEST RESULTS

Conducted Measurement:

LTE Band 4						
BW (MHz)	Modulation	RB Size	RB Offset	Channel/Frequency(MHz)		
				20050	20175	20300
				1720	1747.5	1775
20	QPSK	1	0	22.46	22.53	22.32
20	QPSK	1	49	22.68	22.38	22.17
20	QPSK	1	99	22.46	22.21	22.45
20	QPSK	50	0	21.14	21.24	21.29
20	QPSK	50	24	20.91	21.11	21.08
20	QPSK	50	50	21.16	21.29	20.95
20	QPSK	100	0	21.54	21.29	21.53
20	16QAM	1	0	21.15	21.25	21.09
20	16QAM	1	49	21.16	21.49	20.97
20	16QAM	1	99	21.05	21.07	21.37
20	16QAM	27	0	20.53	20.08	20.39
20	16QAM	27	24	20.26	20.48	20.45
20	16QAM	27	50	20.42	20.30	20.44
20	16QAM	27	0	20.57	20.27	20.32

BW (MHz)	Modulation	RB Size	RB Offset	Channel/Frequency(MHz)		
				20025	20175	20325
				1717.5	1747.5	1777.5
15	QPSK	1	0	22.30	22.49	22.60
15	QPSK	1	37	22.49	21.95	22.71
15	QPSK	1	74	22.36	22.82	22.73
15	QPSK	36	0	21.25	21.50	21.38
15	QPSK	36	20	21.08	21.13	21.31
15	QPSK	36	39	21.02	21.20	21.14
15	QPSK	75	0	20.97	20.99	21.18
15	16QAM	1	0	21.30	21.40	21.42
15	16QAM	1	37	21.24	21.51	21.37
15	16QAM	1	74	21.33	21.30	21.24
15	16QAM	27	0	20.27	20.58	20.40
15	16QAM	27	20	20.07	20.39	20.47
15	16QAM	27	39	20.45	20.61	20.12
15	16QAM	27	0	20.10	20.27	20.42

BW (MHz)	Modulation	RB Size	RB Offset	Channel/Frequency(MHz)		
				20000	20175	20350
				1715	1747.5	1780
10	QPSK	1	0	22.60	22.54	22.24
10	QPSK	1	25	22.63	22.19	22.48
10	QPSK	1	49	22.56	22.30	22.71
10	QPSK	25	0	21.41	20.95	21.14
10	QPSK	25	12	21.20	21.33	21.46
10	QPSK	25	25	21.18	21.35	21.36
10	QPSK	50	0	21.15	21.35	21.33
10	16QAM	1	0	21.10	21.07	21.31
10	16QAM	1	25	21.16	21.10	21.17
10	16QAM	1	49	21.03	21.37	21.14
10	16QAM	27	0	20.45	20.58	20.36
10	16QAM	27	12	20.22	20.62	20.37
10	16QAM	27	25	20.22	20.06	20.58
10	16QAM	27	0	20.46	20.28	20.47

BW (MHz)	Modulation	RB Size	RB Offset	Channel/Frequency(MHz)		
				19975	20175	20375
				1712.5	1747.5	1782.5
5	QPSK	1	0	22.38	22.78	22.13
5	QPSK	1	12	22.45	22.73	22.51
5	QPSK	1	24	22.31	22.27	22.57
5	QPSK	12	0	21.25	21.06	21.21
5	QPSK	12	7	21.34	21.08	21.14
5	QPSK	12	13	21.54	21.29	21.58
5	QPSK	25	0	21.16	21.50	21.19
5	16QAM	1	0	21.10	21.23	21.51
5	16QAM	1	12	21.32	21.05	21.24
5	16QAM	1	24	21.47	21.28	21.13
5	16QAM	12	0	20.43	20.53	20.33
5	16QAM	12	7	20.23	20.51	20.51
5	16QAM	12	13	20.50	20.58	20.46
5	16QAM	25	0	20.38	20.59	20.37

BW (MHz)	Modulation	RB Size	RB Offset	Channel/Frequency(MHz)		
				19665	20175	20385
				1711.5	1747.5	1783.5
3	QPSK	1	0	22.69	22.57	22.18
3	QPSK	1	8	22.53	22.81	22.39
3	QPSK	1	14	22.56	22.78	22.69
3	QPSK	8	0	21.31	21.26	21.40
3	QPSK	8	4	21.26	21.37	21.52
3	QPSK	8	7	21.08	21.08	21.42
3	QPSK	15	0	21.02	21.10	21.46
3	16QAM	1	0	21.20	21.05	21.39
3	16QAM	1	8	21.50	21.20	21.25
3	16QAM	1	14	21.10	21.25	21.34
3	16QAM	8	0	20.15	20.09	20.39
3	16QAM	8	4	20.20	20.58	20.16
3	16QAM	8	7	20.49	20.32	20.40
3	16QAM	15	0	20.39	20.51	20.35

BW (MHz)	Modulation	RB Size	RB Offset	Channel/Frequency(MHz)		
				19957	20175	20393
				1710.7	1747.5	1784.3
1.4	QPSK	1	0	22.48	22.25	22.20
1.4	QPSK	1	3	22.52	22.71	22.62
1.4	QPSK	1	5	22.69	22.08	22.23
1.4	QPSK	3	0	21.21	21.36	21.35
1.4	QPSK	3	1	20.99	21.45	21.18
1.4	QPSK	3	3	21.03	21.20	21.55
1.4	QPSK	6	0	21.41	21.20	21.40
1.4	16QAM	1	0	21.10	21.23	21.50
1.4	16QAM	1	3	21.30	21.16	21.52
1.4	16QAM	1	5	21.14	21.14	20.98
1.4	16QAM	3	0	20.51	20.12	20.62
1.4	16QAM	3	1	20.26	20.12	20.43
1.4	16QAM	3	3	20.53	20.37	20.28
1.4	16QAM	6	0	20.26	20.50	20.14

Radiated Measurement:

Remark:

1. *We were tested all RB Configuration refer 3GPP TS136 521 for each Channel Bandwidth of LTE FDD Band 4; recorded worst case for each Channel Bandwidth of LTE FDD Band 4.*
2. *EIRP=P_{Mea}(dBm)-P_{cl}(dB)+P_{Ag}(dB)+G_a(dBi)*

LTE FDD Band 4_Channel Bandwidth 1.4MHz_QPSK

Frequency (MHz)	P_{Mea} (dBm)	P_{cl} (dB)	G_a Antenna Gain(dB)	P_{Ag} (dB)	EIRP (dBm)	Limit (dBm)	Margin (dB)	Polarization
1710.7	-20.24	2.75	8.98	35.7	21.69	30.00	-8.31	V
1732.5	-20.08	2.81	9.15	35.7	21.96	30.00	-8.04	V
1754.3	-20.11	2.85	9.47	35.7	22.21	30.00	-7.79	V

LTE FDD Band 4_Channel Bandwidth 3MHz_QPSK

Frequency (MHz)	P_{Mea} (dBm)	P_{cl} (dB)	G_a Antenna Gain(dB)	P_{Ag} (dB)	EIRP (dBm)	Limit (dBm)	Margin (dB)	Polarization
1711.5	-20.61	2.75	8.98	35.7	21.32	30.00	-8.68	V
1732.5	-20.87	2.81	9.15	35.7	21.17	30.00	-8.83	V
1753.5	-20.42	2.85	9.47	35.7	21.90	30.00	-8.10	V

LTE FDD Band 4_Channel Bandwidth 5MHz_QPSK

Frequency (MHz)	P_{Mea} (dBm)	P_{cl} (dB)	G_a Antenna Gain(dB)	P_{Ag} (dB)	EIRP (dBm)	Limit (dBm)	Margin (dB)	Polarization
1712.5	-20.71	2.75	8.98	35.7	21.22	30.00	-8.78	V
1732.5	-20.21	2.81	9.15	35.7	21.83	30.00	-8.17	V
1752.5	-20.35	2.85	9.47	35.7	21.97	30.00	-8.03	V

LTE FDD Band 4_Channel Bandwidth 10MHz_QPSK

Frequency (MHz)	P_{Mea} (dBm)	P_{cl} (dB)	G_a Antenna Gain(dB)	P_{Ag} (dB)	EIRP (dBm)	Limit (dBm)	Margin (dB)	Polarization
1715.0	-20.49	2.75	8.98	35.7	21.44	30.00	-8.56	V
1732.5	-20.43	2.81	9.15	35.7	21.61	30.00	-8.39	V
1750.0	-20.89	2.85	9.47	35.7	21.43	30.00	-8.57	V

LTE FDD Band 4_Channel Bandwidth 15MHz_QPSK

Frequency (MHz)	P_{Mea} (dBm)	P_{cl} (dB)	G_a Antenna Gain(dB)	P_{Ag} (dB)	EIRP (dBm)	Limit (dBm)	Margin (dB)	Polarization
1717.5	-20.28	2.75	8.98	35.7	21.65	30.00	-8.35	V
1732.5	-20.18	2.81	9.15	35.7	21.86	30.00	-8.14	V
1747.5	-20.40	2.85	9.47	35.7	21.92	30.00	-8.08	V

LTE FDD Band 4_Channel Bandwidth 20MHz_QPSK

Frequency (MHz)	P_{Mea} (dBm)	P_{cl} (dB)	G_a Antenna Gain(dB)	P_{Ag} (dB)	EIRP (dBm)	Limit (dBm)	Margin (dB)	Polarization
1720.0	-20.88	2.75	8.98	35.7	21.05	30.00	-8.95	V
1732.5	-20.41	2.81	9.15	35.7	21.63	30.00	-8.37	V
1745.0	-20.02	2.85	9.47	35.7	22.30	30.00	-7.70	V

LTE FDD Band 4_Channel Bandwidth 1.4MHz_16QAM

Frequency (MHz)	P_{Mea} (dBm)	P_{cl} (dB)	G_a Antenna Gain(dB)	P_{Ag} (dB)	EIRP (dBm)	Limit (dBm)	Margin (dB)	Polarization
1710.7	-21.27	2.75	8.98	35.7	20.66	30.00	-9.34	V
1732.5	-21.87	2.81	9.15	35.7	20.17	30.00	-9.83	V
1754.3	-21.21	2.85	9.47	35.7	21.11	30.00	-8.89	V

LTE FDD Band 4_Channel Bandwidth 3MHz_16QAM

Frequency (MHz)	P_{Mea} (dBm)	P_{cl} (dB)	G_a Antenna Gain(dB)	P_{Ag} (dB)	EIRP (dBm)	Limit (dBm)	Margin (dB)	Polarization
1711.5	-21.65	2.75	8.98	35.7	20.28	30.00	-9.72	V
1732.5	-21.34	2.81	9.15	35.7	20.70	30.00	-9.30	V
1753.5	-21.62	2.85	9.47	35.7	20.70	30.00	-9.30	V

LTE FDD Band 4_Channel Bandwidth 5MHz_16QAM

Frequency (MHz)	P_{Mea} (dBm)	P_{cl} (dB)	G_a Antenna Gain(dB)	P_{Ag} (dB)	EIRP (dBm)	Limit (dBm)	Margin (dB)	Polarization
1712.5	-21.70	2.75	8.98	35.7	20.23	30.00	-9.77	V
1732.5	-21.07	2.81	9.15	35.7	20.97	30.00	-9.03	V
1752.5	-21.88	2.85	9.47	35.7	20.44	30.00	-9.56	V

LTE FDD Band 4_Channel Bandwidth 10MHz_16QAM

Frequency (MHz)	P_{Mea} (dBm)	P_{cl} (dB)	G_a Antenna Gain(dB)	P_{Ag} (dB)	EIRP (dBm)	Limit (dBm)	Margin (dB)	Polarization
1715.0	-21.26	2.75	8.98	35.7	20.67	30.00	-9.33	V
1732.5	-21.35	2.81	9.15	35.7	20.69	30.00	-9.31	V
1750.0	-21.93	2.85	9.47	35.7	20.39	30.00	-9.61	V

LTE FDD Band 4_Channel Bandwidth 15MHz_16QAM

Frequency (MHz)	P_{Mea} (dBm)	P_{cl} (dB)	G_a Antenna Gain(dB)	P_{Ag} (dB)	EIRP (dBm)	Limit (dBm)	Margin (dB)	Polarization
1717.5	-21.95	2.75	8.98	35.7	19.98	30.00	-10.02	V
1732.5	-21.98	2.81	9.15	35.7	20.06	30.00	-9.94	V
1747.5	-21.49	2.85	9.47	35.7	20.83	30.00	-9.17	V

LTE FDD Band 4_Channel Bandwidth 20MHz_16QAM

Frequency (MHz)	P_{Mea} (dBm)	P_{cl} (dB)	G_a Antenna Gain(dB)	P_{Ag} (dB)	EIRP (dBm)	Limit (dBm)	Margin (dB)	Polarization
1720.0	-21.42	2.75	8.98	35.7	20.51	30.00	-9.49	V
1732.5	-21.63	2.81	9.15	35.7	20.41	30.00	-9.59	V
1745.0	-21.61	2.85	9.47	35.7	20.71	30.00	-9.29	V

3.2 Peak-to-Average Ratio (PAR)

LIMIT

The Peak-to-Average Ratio (PAR) of the transmission may not exceed 13 dB.

TEST CONFIGURATION

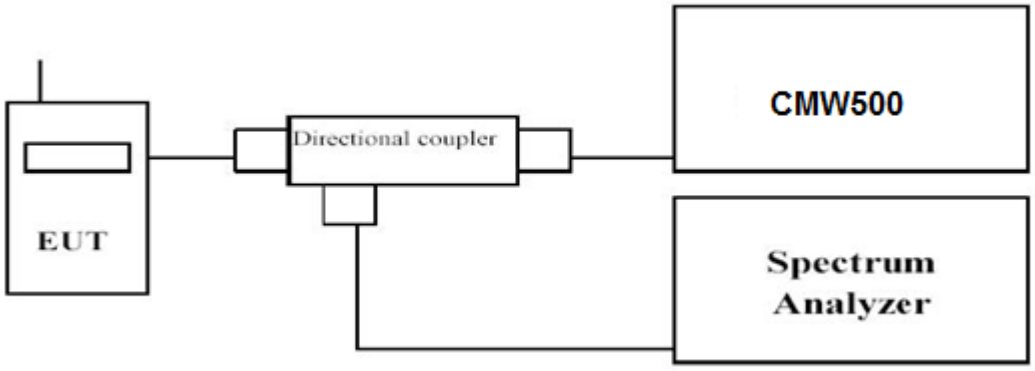

TEST PROCEDURE

1. Refer to instrument's analyzer instruction manual for details on how to use the power statistics/CCDF function;
2. Set resolution/measurement bandwidth ≥ signal's occupied bandwidth;
3. Set the number of counts to a value that stabilizes the measured CCDF curve;
4. Set the measurement interval as follows:
   1). for continuous transmissions, set to 1 ms,
   2). for burst transmissions, employ an external trigger that is synchronized with the EUT burst timing sequence, or use the internal burst trigger with a trigger level that allows the burst to stabilize and set the measurement interval to a time that is less than or equal to the burst duration.
5. Record the maximum PAPR level associated with a probability of 0.1%.

TEST RESULTS

------Passed------

Please refer to the Appendix RF Test Data for LTE Band 4

3.3 Occupied Bandwidth and Emission Bandwidth

LIMIT

N/A

TEST CONFIGURATION

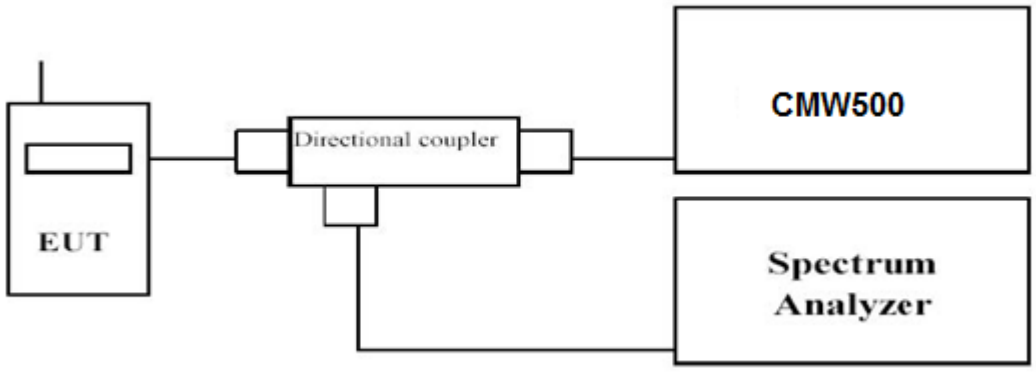

TEST PROCEDURE

The transmitter output was connected to a calibrated coaxial cable and coupler, the other end of which was connected to a spectrum analyzer. The occupied bandwidth was measured with the spectrum analyzer at low, middle and high channel in each band. The -26dBc Emission bandwidth was also measured and recorded.
Set RBW was set to about 1% of emission BW, VBW≥3 times RBW.
-26dBc display line was placed on the screen (or 99% bandwidth), the occupied bandwidth is the delta frequency between the two points where the display line intersects the signal trace.

TEST RESULTS

------Passed------

Please refer to the Appendix RF Test Data for LTE Band 4

3.4 Band Edge compliance

LIMIT

According to §27.53 (h): For operations in the 1710–1755 MHz and 2110–2155 MHz bands, the power of any emission outside a licensee's frequency block shall be attenuated below the transmitter power (P) by at least 43 + 10 log10(P) dB.

TEST CONFIGURATION

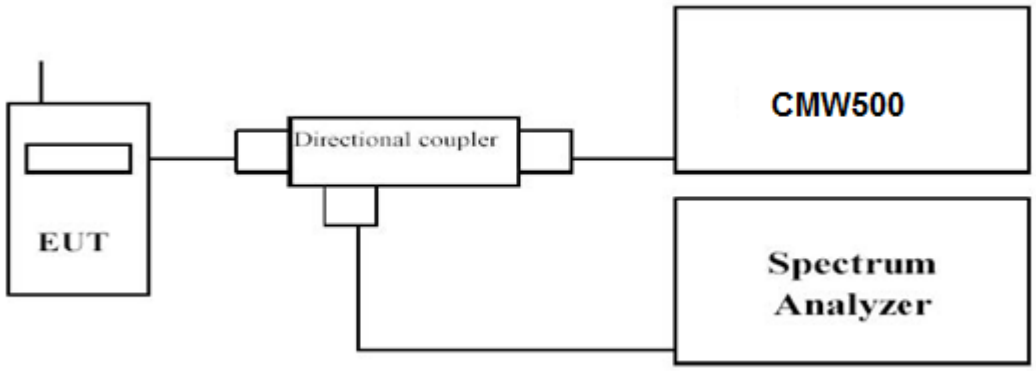

TEST PROCEDURE

1. The transmitter output port was connected to base station.
2. The RF output of EUT was connected to the power meter by RF cable and attenuator, the path loss was compensated to the results for each measurement.
3. Set EUT at maximum power through base station.
4. Select lowest and highest channels for each band and different modulation.
5. Measure Band edge using RMS (Average) detector by spectrum

TEST RESULTS

------Passed------

Please refer to the Appendix RF Test Data for LTE Band 4

3.5 Spurious Emission

LIMIT

According to §27.53 (h): For operations in the 1710–1755 MHz and 2110–2155 MHz bands, the power of any emission outside a licensee's frequency block shall be attenuated below the transmitter power (P) by at least 43 + 10 log10(P) dB.

TEST CONFIGURATION

Conducted Spurious Measurement:

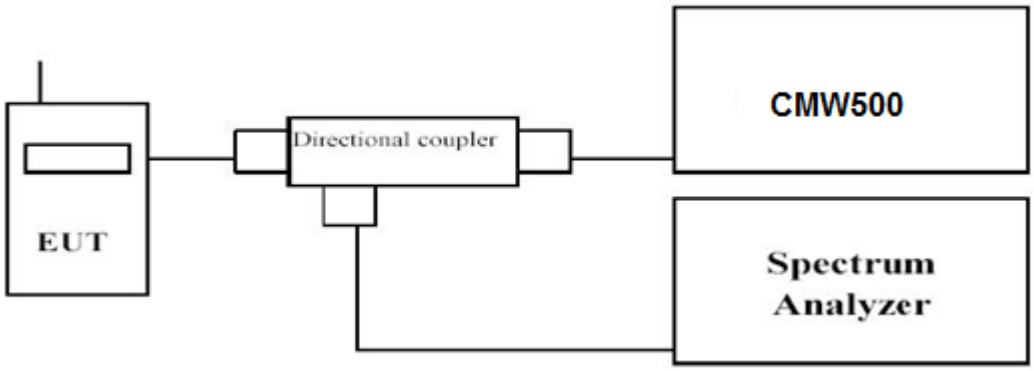

Radiated Spurious Measurement:

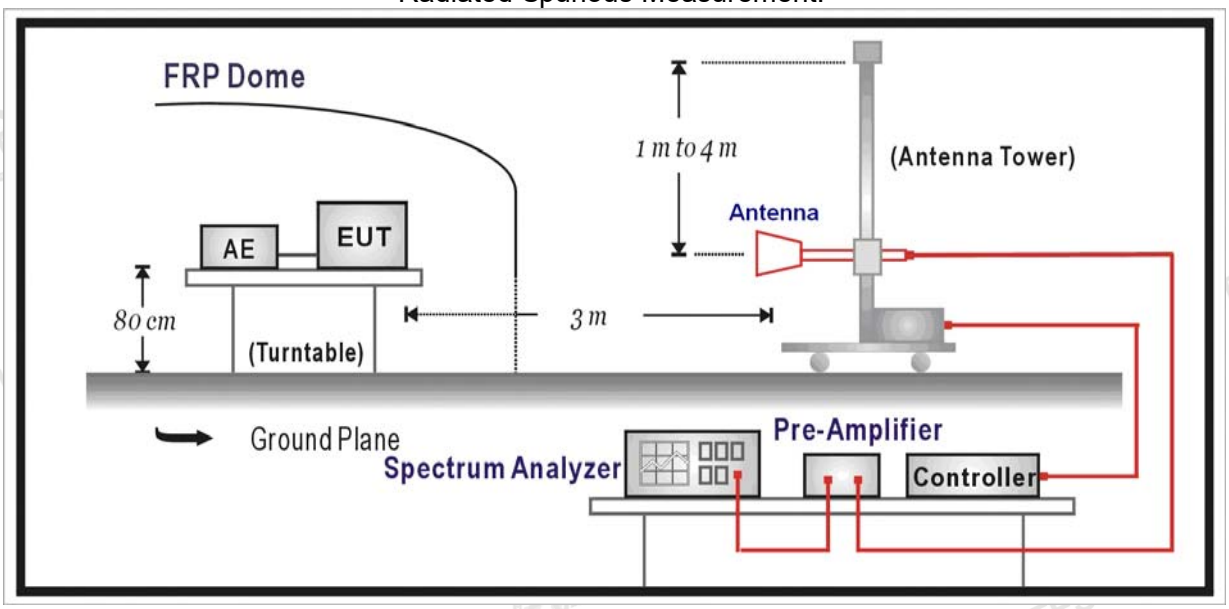

TEST PROCEDURE

The EUT was setup according to ANSI/TIA-603-E-2016

Conducted Spurious Measurement:

a. Place the EUT on a bench and set it in transmitting mode.
b. Connect a low loss RF cable from the antenna port to a spectrum analyzer and CMW500 by a Directional Couple.
c. EUT Communicate with CMW500 then selects a channel for testing.
d. Add a correction factor to the display of spectrum, and then test.
e. The resolution bandwidth of the spectrum analyzer was set sufficient scans were taken to show the out of band Emission if any up to10th harmonic.

Radiated Spurious Measurement:

a. The EUT shall be placed at the specified height on a support, and in the position closest to normal use as declared by provider.
b. The test antenna shall be oriented initially for vertical polarization and shall be chosen to correspond to the frequency of the transmitter
c. The output of the test antenna shall be connected to the measuring receiver.
d. The transmitter shall be switched on and the measuring receiver shall be tuned to the frequency of the transmitter under test.
e. The test antenna shall be raised and lowered through the specified range of height until a maximum signal level is detected by the measuring receiver.
f. The transmitter shall then be rotated through 360° in the horizontal plane, until the maximum signal level is detected by the measuring receiver.
g. The test antenna shall be raised and lowered again through the specified range of height until a maximum signal level is detected by the measuring receiver.
h. The maximum signal level detected by the measuring receiver shall be noted.
i. The transmitter shall be replaced by a substitution antenna.
j. The substitution antenna shall be orientated for vertical polarization and the length of the substitution antenna shall be adjusted to correspond to the frequency of the transmitter.
k. The substitution antenna shall be connected to a calibrated signal generator.
l. If necessary, the input attenuator setting of the measuring receiver shall be adjusted in order to increase the sensitivity of the measuring receiver.
m. The test antenna shall be raised and lowered through the specified range of height to ensure that the maximum signal is received.
n. The input signal to the substitution antenna shall be adjusted to the level that produces a level detected by the measuring receiver, that is equal to the level noted while the transmitter radiated power was measured, corrected for the change of input attenuator setting of the measuring receiver.
o. The measurement shall be repeated with the test antenna and the substitution antenna orientated for horizontal polarization.
p. The measure of the effective radiated power is the larger of the two levels recorded at the input to the substitution antenna, corrected for gain of the substitution antenna if necessary.
q. The resolution bandwidth of the spectrum analyzer was set at 100 kHz for below 1GHz and 1MHz for above 1GHz. The frequency range was checked up to 10th harmonic.
r. Test site anechoic chamber refer to ANSI C63.4.

TEST RESULTS

Conducted Measurement:

------Passed------

Please refer to the Appendix RF Test Data for LTE Band 4

Radiated Measurement:

Remark:
1. *We were tested all RB Configuration refer 3GPP TS136 521 for each Channel Bandwidth of LTE FDD Band 4;*

LTE FDD Band 4_Channel Bandwidth 20MHz_QPSK_ Low Channel

Frequency (MHz)	P_{Mea} (dBm)	P_{cl} (dB)	Distance (m)	G_a Antenna Gain(dB)	Peak EIRP (dBm)	Limit (dBm)	Margin (dB)	Polarization
3440.0	-42.04	4.02	3.00	12.5	-33.56	-13.00	-20.56	H
5160.0	-50.95	5.11	3.00	13.38	-42.68	-13.00	-29.68	H
3440.0	-40.39	4.02	3.00	12.5	-31.91	-13.00	-18.91	V
5160.0	-51.50	5.11	3.00	13.38	-43.23	-13.00	-30.23	V

LTE FDD Band 4_Channel Bandwidth 20MHz_QPSK_ Middle Channel

Frequency (MHz)	P_{Mea} (dBm)	P_{cl} (dB)	Distance (m)	G_a Antenna Gain(dB)	EIRP (dBm)	Limit (dBm)	Margin (dB)	Polarization
3465.0	-40.43	4.02	3.00	12.45	-32.00	-13.00	-19.00	H
5197.5	-48.47	5.11	3.00	13.38	-40.20	-13.00	-27.20	H
3465.0	-43.13	4.02	3.00	12.45	-34.70	-13.00	-21.70	V
5197.5	-54.95	5.11	3.00	13.38	-46.68	-13.00	-33.68	V

LTE FDD Band 4_Channel Bandwidth 20MHz_QPSK_ High Channel

Frequency (MHz)	P_{Mea} (dBm)	P_{cl} (dB)	Distance (m)	G_a Antenna Gain(dB)	EIRP (dBm)	Limit (dBm)	Margin (dB)	Polarization
3490.0	-43.18	4.02	3.00	12.21	-34.99	-13.00	-21.99	H
5235.0	-54.38	5.11	3.00	13.26	-46.23	-13.00	-33.23	H
3490.0	-43.36	4.02	3.00	12.21	-35.17	-13.00	-22.17	V
5235.0	-47.62	5.11	3.00	13.26	-39.47	-13.00	-26.47	V

Notes:
1.All channel bandwidth were tested,the report recorded the worst data.
2. EIRP=PMea(dBm)-Pcl(dB)+PAg(dB)+Ga(dBi)
3. ERP = EIRP – 2.15dBi as EIRP by subtracting the gain of the dipole.
4. Margin = EIRP – Limit
5. We measured all modes and only recorded the worst case.

3.6 Frequency Stability under Temperature & Voltage Variations

LIMIT

According to §27.54, §2.1055 requirement, the frequency stability shall be sufficient to ensure that the fundamental emissions stay within the authorized bands of operation and should not exceed 2.5ppm.

TEST CONFIGURATION

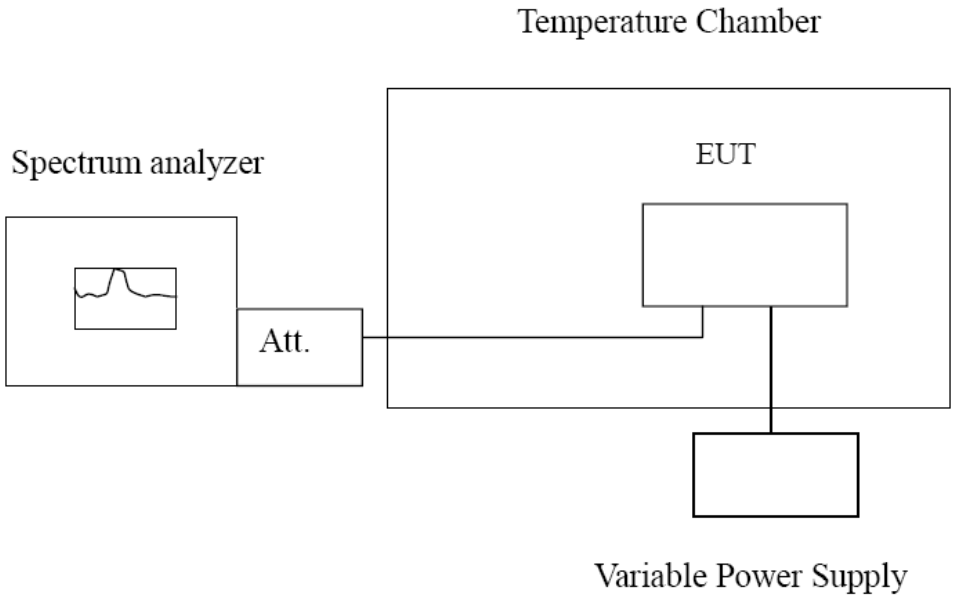

TEST PROCEDURE

The EUT was setup according to ANSI/TIA-603-E-2016

Frequency Stability under Temperature Variations:
In order to measure the carrier frequency under the condition of AFC lock, it is necessary to make measurements with the EUT in a “call mode”. This is accomplished with the use of R&S CMW500 DIGITAL RADIO COMMUNICATION TESTER.

1. Measure the carrier frequency at room temperature.
2. Subject the EUT to overnight soak at -30℃.
3. With the EUT, powered via nominal voltage, connected to the CMW500 and in a simulated call on middle channel for LTE band 4, measure the carrier frequency. These measurements should be made within 2 minutes of Powering up the EUT, to prevent significant self-warming.
4. Repeat the above measurements at 10℃ increments from -30℃ to +50℃. Allow at least 1.5 hours at each temperature, unpowered, before making measurements.
5. Re-measure carrier frequency at room temperature with nominal voltage. Vary supply voltage from minimum voltage to maximum voltage, in 0.1Volt increments re-measuring carrier frequency at each voltage. Pause at nominal voltage for 1.5 hours unpowered, to allow any self-heating to stabilize, before continuing.
6. Subject the EUT to overnight soak at +50℃.
7. With the EUT, powered via nominal voltage, connected to the CMW500 and in a simulated call on the centre channel, measure the carrier frequency. These measurements should be made within 2 minutes of Powering up the EUT, to prevent significant self-warming.
8. Repeat the above measurements at 10 ℃ increments from +50℃ to -30℃. Allow at least 1.5 hours at each temperature, unpowered, before making measurements
9. At all temperature levels hold the temperature to +/- 0.5℃ during the measurement procedure.

Frequency Stability under Voltage Variations:

Set chamber temperature to 20℃. Use a variable AC power supply / DC power source to power the EUT and set the voltage to rated voltage. Set the spectrum analyzer RBW low enough to obtain the desired frequency resolution and recorded the frequency.
Reduce the input voltage to specify extreme voltage variation (±15%) and endpoint, record the

maximum frequency change.

TEST RESULTS

------Passed------

Please refer to the Appendix RF Test Data for LTE Band 4

4 Test Setup Photos of the EUT

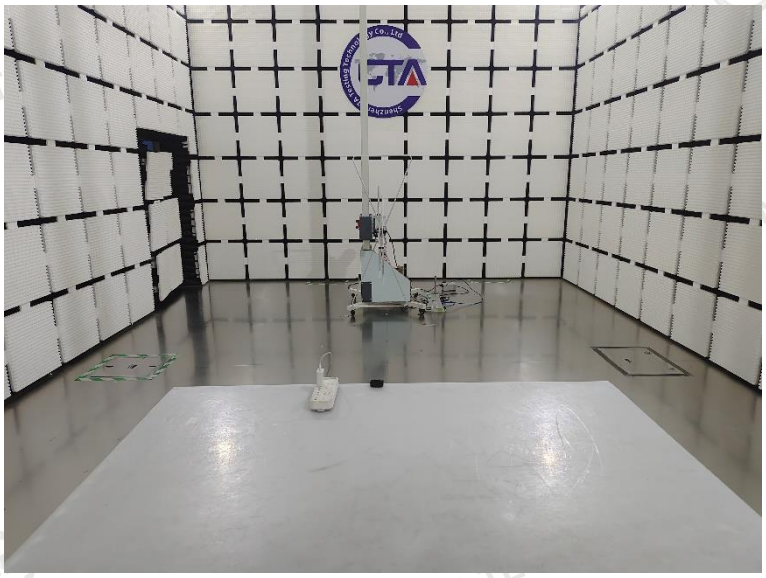

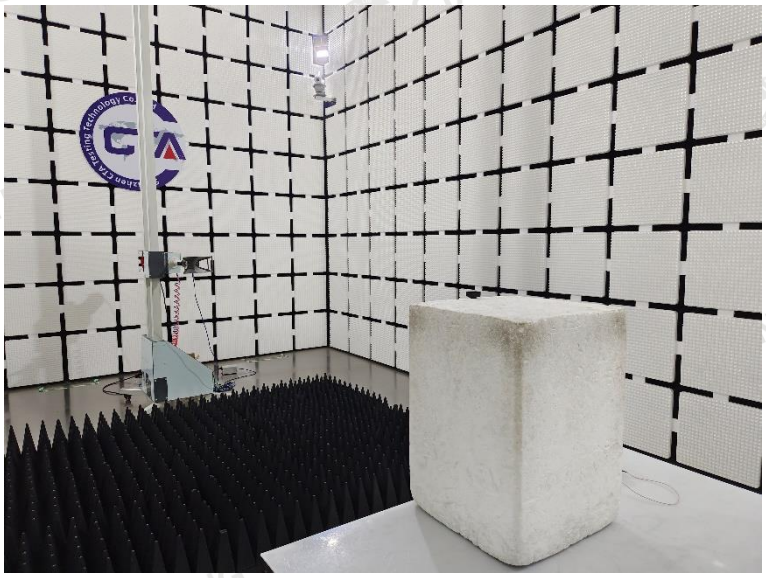

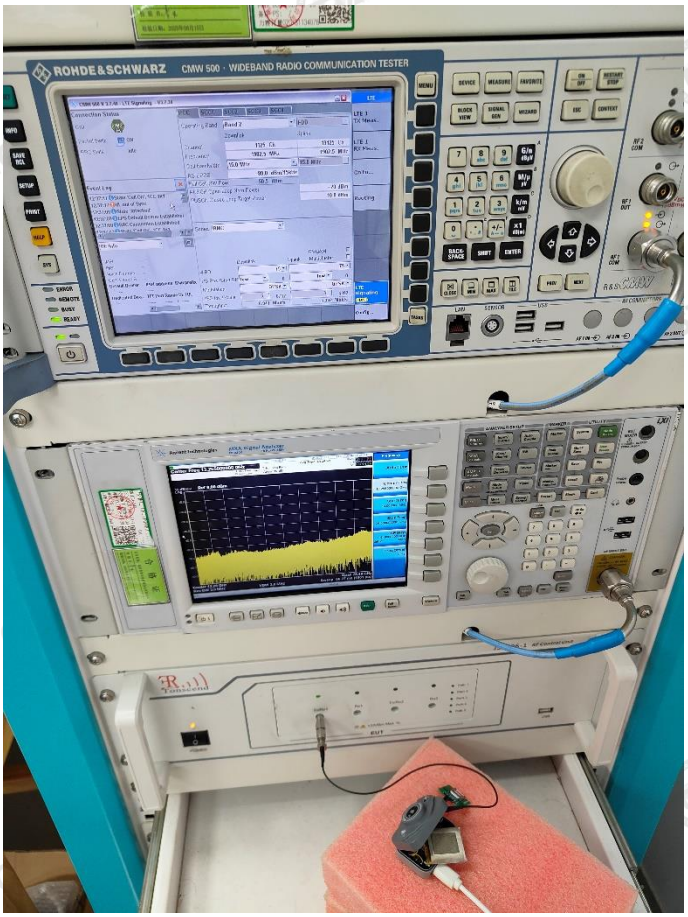

5 Photos of the EUT

Reference to the test report No. CTA26062500301.

********** End of Report **********