VeydooMax

AI Riding System

V5 User Manual

Tips

1. Please read these instructions carefully.
2. This set is exclusively for motorcycle with negative grounding and 12V power supply.
3. Please turn off the power of motorcycle before finishing installation.
4. After choosing the best position,fixed the DVR parts on.
5. Do not use high-pressure water gun to flush the machine!
6. This product max support for 256GB Micro SD card, in order to make sure video recording normally, please must be use high speed Class 10 Micro SD card(Reading speed of 100Mb/s, writing speed of 60Mb/s).
7. When connecting cameras,please check the right camera with right mark.F (short wire) connect front camera, B(long wire) connect rear camera.
8. Cameras are fully sealed waterproof, but still need to avoid using Cleaning Naphtha, alcohol, and Solvents such as tar detergent come into contact with the lens to prevent damage. the waterproof layer.

Note: For storage speed and security, please clean the Micro SD car regularly.

01 Product Overview

This product is engineered for motorcycle use, seamlessly blending four advanced technologies to enhance both riding experience and safety:

1. Dual Ultra HD Cameras
Front and rear 1440P cameras support day-and-night recording with loop storage for incident footage. Starlight night vision maintains clarity in low-light conditions, ensuring every journey is captured clearly.

2. Smart Full-Scene Connectivity
Supports CarPlay, and Android Auto for seamless smartphone integration. Voice control enables hands-free navigation, music playback, and calling. Real-time traffic updates help maintain focus on the road.

3. Active Safety Features
BSD: Millimeter-wave radar warns of vehicles in blind zones up to 2 seconds in advance, reducing collision risks.
TPMS: Continuously monitors tire pressure and temperature, alerting riders to anomalies to help prevent accidents.

4. Rugged, All-Weather Design
Constructed with a durable metal frame and IP67 waterproof rating, it resists heavy rain, dust, and vibration-ideal for long-distance and extreme-weather riding.

02 Main Unit & Accessories

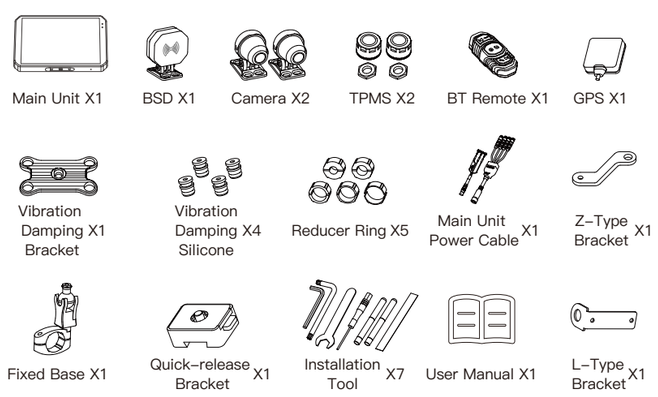

[Component Details]

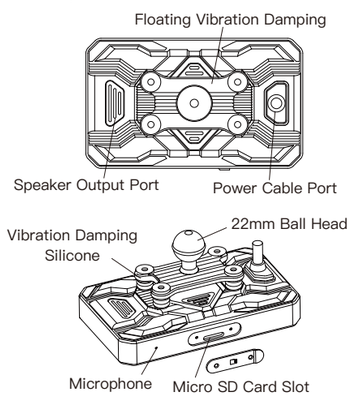

03 Installation Instructions

[Micro SD Card Installation]

1. The device has built-in storage and supports Micro SD cards.
2. It is recommended to use a high-speed Micro SD card (Class 10 or above), with a minimum capacity of 32GB and a maximum support of 256GB.
3. After installation, please format the Micro SD card for the first use — go to Device Settings > System Settings > About Device > Format.

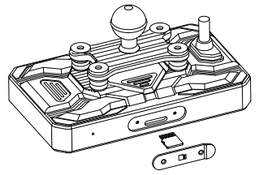

Micro SD card backs up collision videos. Format regularly for best performance.

[Ball Head Bracket Installation Instructions]

Select the appropriate size adapter ring based on the handlebar diameter.

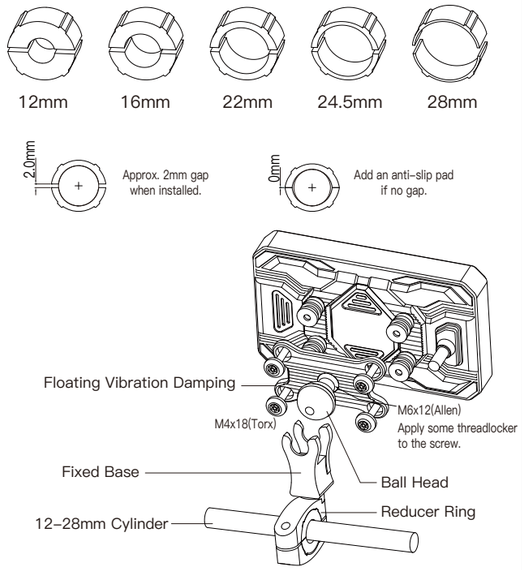

[L-Bracket Installation for Bluetooth Remote]

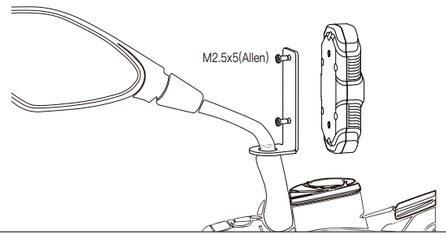

[Z-Bracket Installation Instructions]

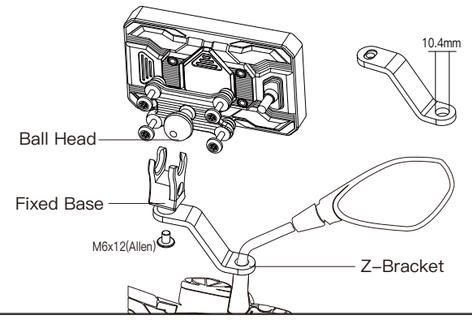

[Wiring Instructions]

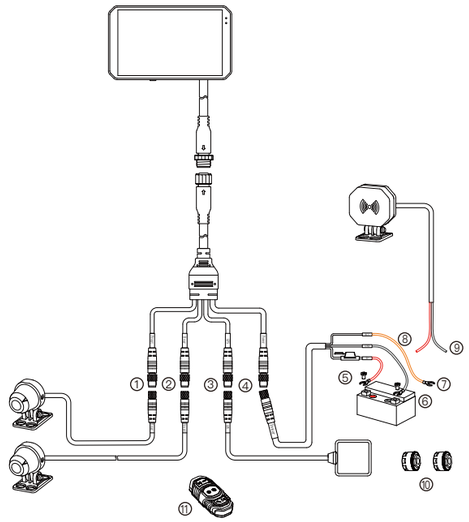

① Rear cable connects to the rear camera.
② Front cable connects to the front camera.
③ GPS cable connects to the GPS module.
④ Power cable connects to the main unit power line.
⑤ Power B+ cable connects to the battery positive terminal.
⑥ Power GND cable +⑨radar negative cable connects to the battery negative terminal.
⑦ Power ACC cable +⑧radar positive cable connects to the battery ACC line.
⑩ Front/Rear tire pressure sensors are installed at the respective tire valve positions.
⑪ Remote connects to the main unit via Bluetooth.

[Quick Release Bracket Installation/Removal]

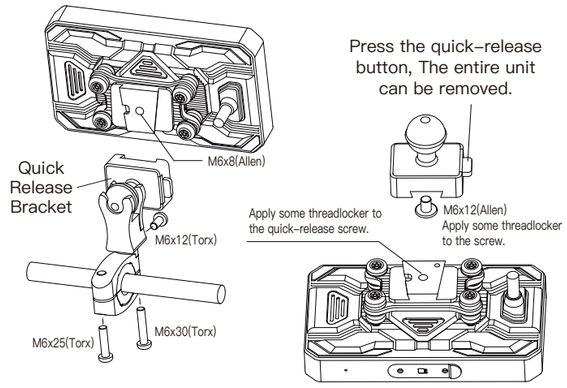

[GPS Installation Notes]

Peel off the 3M adhesive and mount the GPS inside the vehicle shell.
1. Do not install under carbon fiber material.
2. Avoid metal obstructions.
3. Keep away from cameras, camera cables, and the main unit as much as possible.
4. If GPS signal is not received, try repositioning it.
5. Note during installation: This Side Up
— keep the marked side facing up.

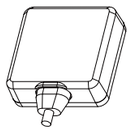

[Radar Installation Notes]

Remove the 3M adhesive and install the radar on the rear of the vehicle. The installation height should be between 60—90cm from the ground, and the radar should be installed vertically at 90° to the ground. If installed in reverse, loosen the screws and rotate the radar 180° forward and backward to adjust.

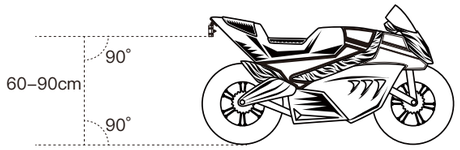

[Camera Installation Notes]

Remove the 3M adhesive and stick the front and rear cameras to the front and rear of the vehicle respectively.
1. Loosen the screws to rotate the camera 180° forward and backward.
2. Adjust the camera arrow indicator to face straight upward.
3. If installed upside down, rotate the camera 180° and adjust the angle accordingly.

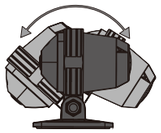

【Note】Before using the 3M adhesive, clean the mounting surface thoroughly. Press firmly for more than 10 seconds when applying, and let it sit undisturbed for 30 minutes to ensure optimal adhesion.

[Tire Pressure Sensor Installation Notes]

After the device is powered on, install the tire pressure sensors. Once paired, they enable real-time pressure monitoring and alert you when abnormal conditions occur.

A dedicated tool is available for battery replacement

Anti-theft cap

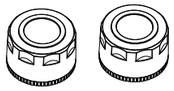

Battery life: 2 years
Dimensions: 21x15.6mm
Battery replacement: CR1632
Pressure monitoring range: 0 to 87psi (0 to 600kPa)
Temperature monitoring range: -40℃ to 85℃

04 Bluetooth Remote Instructions

1. Pairing Mode: Press and hold the leftmost and rightmost buttons simultaneously to enter pairing mode. The LED will flash red and blue alternately 5 times.
2. Battery Status: Blue light if battery > 2.85V; Red light if battery < 2.85V.

Button	Function	Short Press	Long Press (2s) Function triggered immediately after the second press	Double Press
	Answer Call Previous Track Video Lock	Incoming Call:Answer Call During Music Playback:Previous Track	Event recording	Lock /Unlock Screen
	Switch Pause/Play Music	Dashboard > PhoneLink > DVR Rear View > DVR Front View > DVR Rear and Front(small) > DVR Front amd Rear(small) > Dashboard	During Music Playback: Pause/Play Music	/
	End Call Next Track Take Photo	Incoming Call:Reject call During Call:End call During Music Playback:Next track	Take a Photo	Turn Screen On / Off

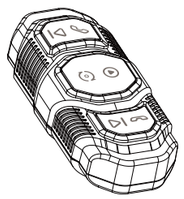

When using Motonavi, the remote cannot answer calls. Please use your headset or phone instead.

05 WiFi APP Software Download

Download the MotoNavi APP for real-time video viewing, playback of videos/photos, downloading files, and setting options for VeydooMax V5.

WiFi Name: VeydooMax_xxxxxx
Password: 12345678

Please scan to download and install

06 Product Features & Specifications

Model	VeydooMax V5
Dimensions	137.6*83.5*25.4mm
Display	5-inch, 1024×600, Brightness 1000 nit
CPU	Dual-core A55
Storage	128/256GB eMMC, up to 256GB Micro SD
Bluetooth	5.4
WiFi	5GHz for PhoneLink
GPS	Supports BDS/GPS/GLONASS/Galileo/QZSS
OS	Linux
PhoneLink	CarPlay, Android Auto, MotoNavi, WiFi Video
Wireless Remote	Supported
AI Anti-Shake	Supported
Loop Recording	Supported
Software Upgrade	SD-Card and OTA supported

Camera	Sensor：Sony IMX675
	Lens：F1.80±5%, 2G+4P+IR, FOV D:139° H:107° V:70°
	Resolution: 2K, 2560*1440@30fps
	Cable length：Front camera 1200mm+300mm Rear camera 2700mm+300mm
Sensors	Light sensor, 3-axis G-sensor
Tire Pressure	Supported
BSD Radar	24GHz BSD supported
Speaker	Supported，8Ω 1W
Battery	Super Capacitor
Quick Release	Supported
Operating Environment	Operating Voltage：9~32V
	Operating Temperature： -20°~70°
	Storage Temperature：-25°~80°
	Waterproof Rating：IP67

07 Frequently Asked Questions (FAQ)

1. Loop Recording Fails
Format Card: Format new or error-prone cards via device settings.
Check Feeds: Ensure cameras display correctly; signal errors block recording.
Replace Card: If formatting fails, use a new Micro SD.
2. No Image Display
Secure Links: Check for loose plugs or damaged cables.
Swap Ports: Cross-test front/rear connections to isolate the fault.
3. Lag or System Lag
Use Class 10: Only use high-speed brand cards. Low-quality cards cause lag, artifacts, or crashes.
4. Settings Not Saving
Power Loss: Ensure the device doesn't lose power abruptly after adjusting settings.

08 Disclaimer

To ensure video integrity, the device must remain in normal recording mode. Data loss or corruption may occur if:
Sudden Interruption: Removing the SD card or losing power during recording will damage the current file.
Physical Impact: Severe crashes or impacts that loosen the memory card can result in file loss.
Disclaimer: Recordings are for reference only. The company is not liable for data loss caused by abnormal operating conditions.

09 FCC WARNING

This device complies with part 15 of the FCC Rules. Operation is subject to the following two conditions: (1) This device may not cause harmful interference, and (2) this device must
accept any interference received, including interference that may cause undesired operation.
This equipment has been tested and found to comply with the limits for a Class B digital device, pursuant to Part 15 of the FCC Rules. These limits are designed to provide reasonable
protection against harmful interference in a residential installation. This equipment generates uses and can radiate radio frequency energy and, if not installed and used in accordance with the instructions, may cause harmful interference to rad io communications. However, there is no guarantee that interference will not occur in a particular installation. If this equipment does cause harmful interference to radio or television reception, which can be determined by turning the equip ment off and on, the user is encouraged to try to correct the interference by one or more of the following measures:
-- Reorient or relocate the receiving antenna.
-- Increase the separation between the equipment and receiver.
-- Connect the equipment into an outlet on a circuit different from that to which the receiver is connected.
-- Consult the dealer or an experienced radio/TV technician for help.
Any Changes or modifications not expressly approved by the party responsible for compliance could void the user's authority to operate the equipment.
This equipment complies with the FCC radiation exposure limits set forth for an uncontrolled environment, This transmitter must not be co-located or operating in conjunction with any other antenna or transmitter.
The device can be used in portable exposure conditions without restriction.