RF EXPOSURE Test Report

Product: MLB AND MQB KEY PROGRAMMER

Trade Mark: AUTEL

Model Number: APB300

FCC ID: 2BVGW-DC2521

Prepared for

NEREBELZHA VIETNAM CO., LTD

Lot B30, Land Plot CN4, An Duong Industrial Park, An Phong Ward, Hai Phong City, Vietnam

Prepared by

Shenzhen HongBiao Certification& Testing Co., Ltd

Room 102, 201, Building 2, Yuanwanggu RFID Industrial Park, Tongguan Road, Tianliao Community, Yutang Street, Guangming District, Shenzhen, China

Tel.: +86-755-2998 9321 Fax.: +86-755-2998 5110

Website: http://www.sz-hongbiao.com

Table of Contents

1 GENERAL DESCRIPTION 5

1.1 DESCRIPTION OF EUT 5
1.2 TEST MODE 5
1.3 TEST SETUP 5
1.4 ANCILLARY EQUIPMENT 5

2 TEST FACILITIES AND ACCREDITATIONS 6

2.1 TEST LABORATORY 6
2.2 ENVIRONMENTAL CONDITIONS 6
2.3 MEASUREMENT UNCERTAINTY 6
2.4 TEST SOFTWARE 6

3 LIST OF TEST EQUIPMENT 7

4 RF EXPOSURE 8

4.1 MAXIMUM PERMISSIBLE EXPOSURE 8
4.1.1. Limit 8
4.1.2. Test Procedures 8
4.1.3. Test Setup 8
4.1.4. Test Result 8

5 PHOTOGRAPHS OF THE TEST SETUP 10

TEST RESULT CERTIFICATION

Applicant's Name..... :	NEREBELZHA VIETNAM CO., LTD
Address ..... :	Lot B30, Land Plot CN4, An Duong Industrial Park, An Phong Ward, Hai Phong City, Vietnam
Manufacturer's Name ..... :	Autel Intelligent Technology Corp., Ltd.
Address ..... :	Floor 2, Caihong Keji Building, 36 Hi-tech North Six Road, Songpingshan Community, Xili, Nanshan, Shenzhen 518055, China

Product description

Product name ..... :	MLB AND MQB KEY PROGRAMMER
Model Number ..... :	APB300
Standards ..... :	FCC CFR 47 PART 1 , 1.1310
Test procedure..... :	KDB 680106 D01 Wireless Power Transfer v04

This device described above has been tested by Shenzhen HongBiao Certification& Testing Co., Ltd and the test results show that the equipment under test (EUT) is in compliance with the EMC requirements. And it is applicable only to the tested sample identified in the report.

Date of Test ..... :

Date (s) of performance of tests..... : Jan 13, 2025~ Jan 28, 2026

Test Result..... : **Pass**

Testing Engineer : Zoe Su

(Zoe Su)

Technical Manager : Ming Liu

(Ming Liu)

Authorized Signatory : Leo Su

(Leo Su)

Revision History

Revised No.	Date of Issue	Description
01	Jan 28, 2026	Original

1 General Description

1.1 Description of EUT

Product name:	MLB AND MQB KEY PROGRAMMER
Model name:	APB300
Series Model:	N/A
Different of series model:	N/A
Operation frequency:	125kHz
Modulation type:	ASK
Antenna type:	125kHz: Coil Antenna
Hardware version:	V2
Software version:	V1.0
Battery:	N/A
Power supply:	DC 5V/1A, DC 12V/0.5A
Adapter information:	N/A

1.2 Test Mode

Pretest Test Mode	Description of Mode
1	Near Field Communication Mode
2	/
3	/
4	/

1.3 Test Setup

See photographs of the test setup in the report for the actual setup and connections between EUT and support equipment.

1.4 Ancillary Equipment

Equipment	Model	S/N	Manufacturer
Battery	/	/	/
RFID Card	/	/	/
Phone	LE2120	8602840564 41073	Shenzhen Oneplus Technology Co., Ltd

2 Test Facilities and Accreditations

2.1 Test Laboratory

Test Site	Shenzhen HongBiao Certification& Testing Co., Ltd
Test Site Location	Room 102, 201, Building 2, Yuanwanggu RFID Industrial Park, Tongguan Road, Tianliao Community, Yutang Street, Guangming District, Shenzhen, China
Telephone:	(86-755) 2998 9321
Fax:	(86-755) 2998 5110
FCC Registration No.:	CN1341
A2LA Certificate No.:	6765.01

2.2 Environmental Conditions

During the measurement the environmental conditions were within the listed ranges:

Temperature:	15ºC~35ºC
Relative Humidity:	20%~75%
Air Pressure:	98kPa~101kPa

2.3 Measurement Uncertainty

The reported uncertainty of measurement y ± U, where expended uncertainty U is based on a standard uncertainty multiplied by a coverage factor of k=2, providing a level of confidence of approximately 95 %.
The data and results quoted in this document are true and accurate values, and uncertainties are not involved in the calculations.
In addition, components and mass production processes that are similar to testing equipment may introduce additional deviations, and the manufacturer is solely responsible for the continued compliance of the equipment.

Measurement Frequency Range	U, (dB)	Note
RF frequency	$2x\ 10^{-5}$	
E-field	± 1.06 dB	
H-field	± 0.7 dB	
Temperature	±1 degree	
Humidity	± 5 %	

2.4 Test Software

Software name	Manufacturer	Model	Version
EHP200-TS	Narda	EHP-200A	Rel 1.95

3 List of Test Equipment

Item	Equipment No.	Equipment name	Manufacturer	Model	Serial No.	Calibration date	Due date
1	HB-E073	Electric and Magnetic Field Analyzer	Narda	EHP-200A	180ZX11013	2025-05-10	2026-05-09

Note: the calibration interval of the above test instruments is 12 months and the calibrations are traceable to international system unit (SI).

4 RF Exposure

4.1 Maximum Permissible Exposure

4.1.1. Limit

Frequency range(MHz)	Electric field strength(V/m)	Magnetic field strength(A/m)	Power density(mW/cm2)	Averaging time(minutes)
(A) Limits for Occupational/Controlled Exposure				
0.3-3.0	614	1.63	*100	6
3.0-30	1842/f	4.89/f	$*900/f^2$	6
30-300	61.4	0.163	1.0 6	6
300-1500			f/300	6
1500-100000			5	6
(B) Limits for General Population/Uncontrolled Exposure				
0.3-1.34	614	1.63	*100	30
1.34-30	824/f	2.19/f	$*180/f^2$	30
30-300	27.5	0.073	0.2	30
300-1500			f/1500	30
1500-100000			1	30
f = frequency in MHz * = Plane-wave equivalent power density				

4.1.2. Test Procedures

E and H-field measurements should be made with the center of the probe at a distance of 20 cm surrounding the device and 20 cm above the top surface of the primary/client pair.
Record the test results.

4.1.3. Test Setup

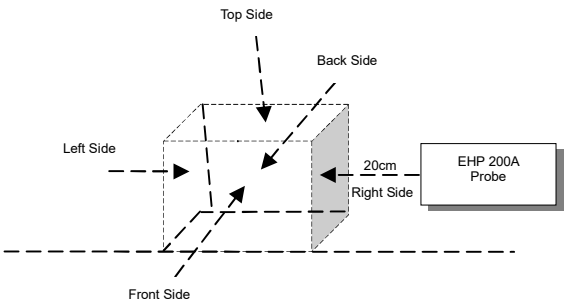

4.1.4. Test Result

Test condition: Mode 1 operating mode with client device

Maximum permissible Exposure			
Test sides	Test distance(cm)	E –field(V/m)	H–field(A/m)
Top	20	4.4558	0.0921
Left	20	3.3125	0.0498
Right	20	2.4625	0.0503
Front	20	1.5624	0.0465
Back	20	1.3405	0.0472
Limit		614	1.63
Margin Limit (%)		0.73%	5.65%

5 Photographs of the Test Setup

MPE

****** END OF REPORT ******