PURPLE LEAF

est. 2013

Strip Lights for 12' × 14'/12' × 16' PERGOLA

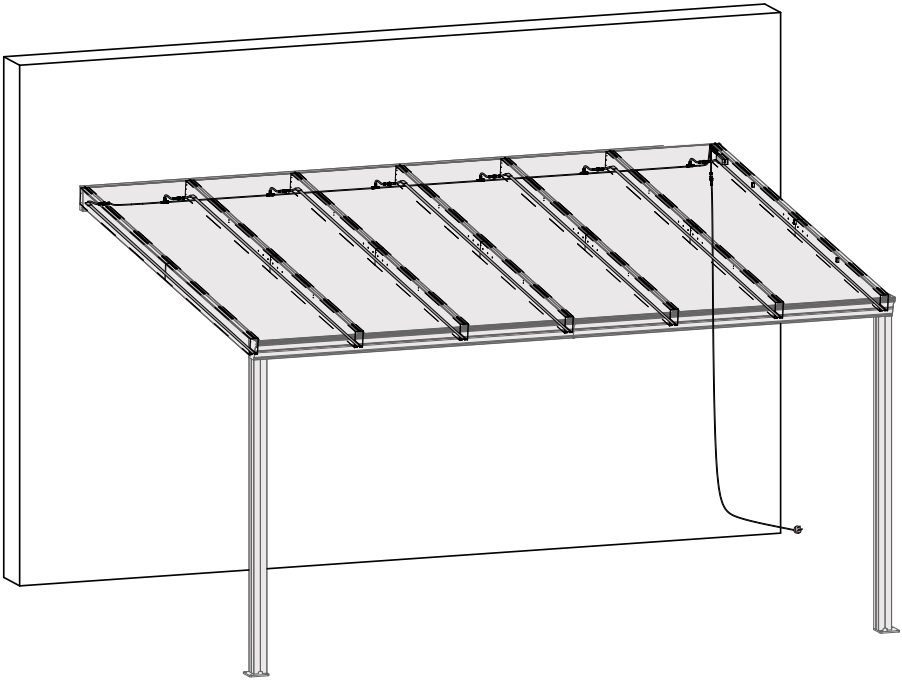

Assembly Manual

©Copyright 2013-2026 Purple Leaf Inc. All Rights Reserved

CHECK LIST

aa X1

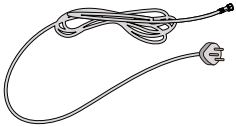

bb X7
(3.55*0.3m)

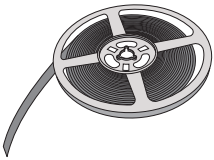

cc X1

dd X1

ee X1

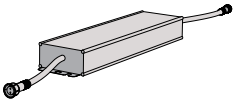

ff X1

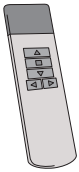

hh X4
(M3.2×10mm)

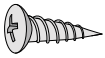

gg X14
(1.776m)

ee × 1

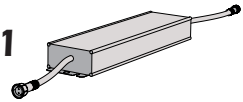

hh × 4

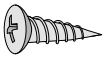

(M3.2×10mm)

Note: There are no pre-drilled holes on the pergola beams for part ee. To install, position the part and secure it directly by driving in the provided self-tapping screws (Screw hh).

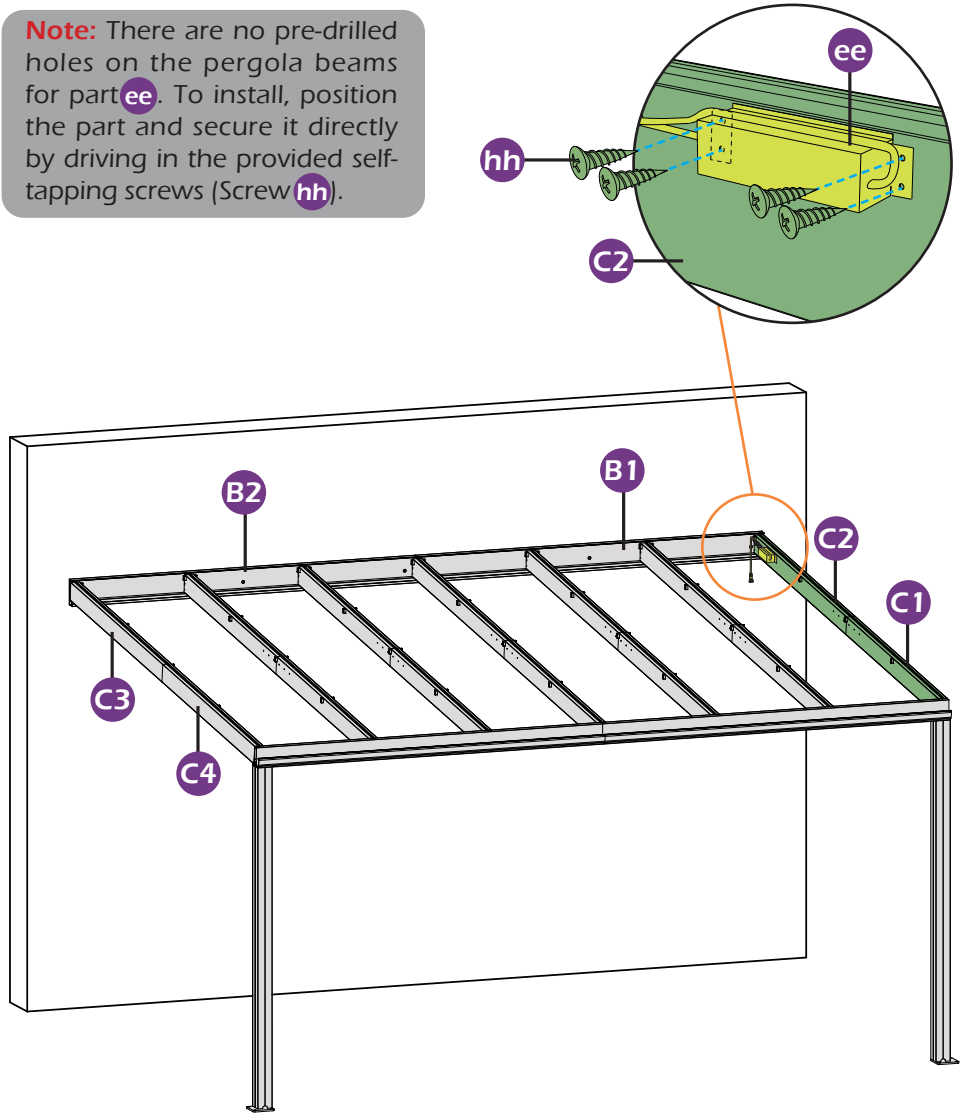

STEP 1

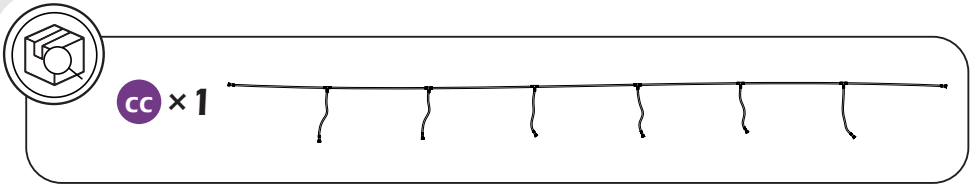

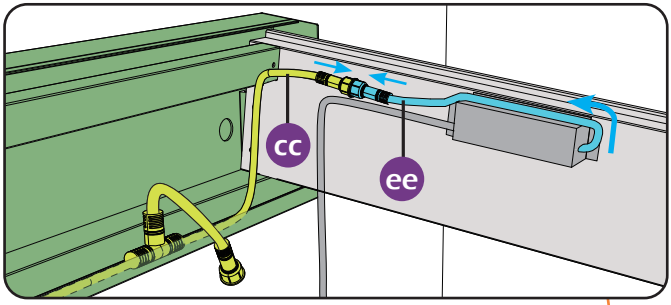

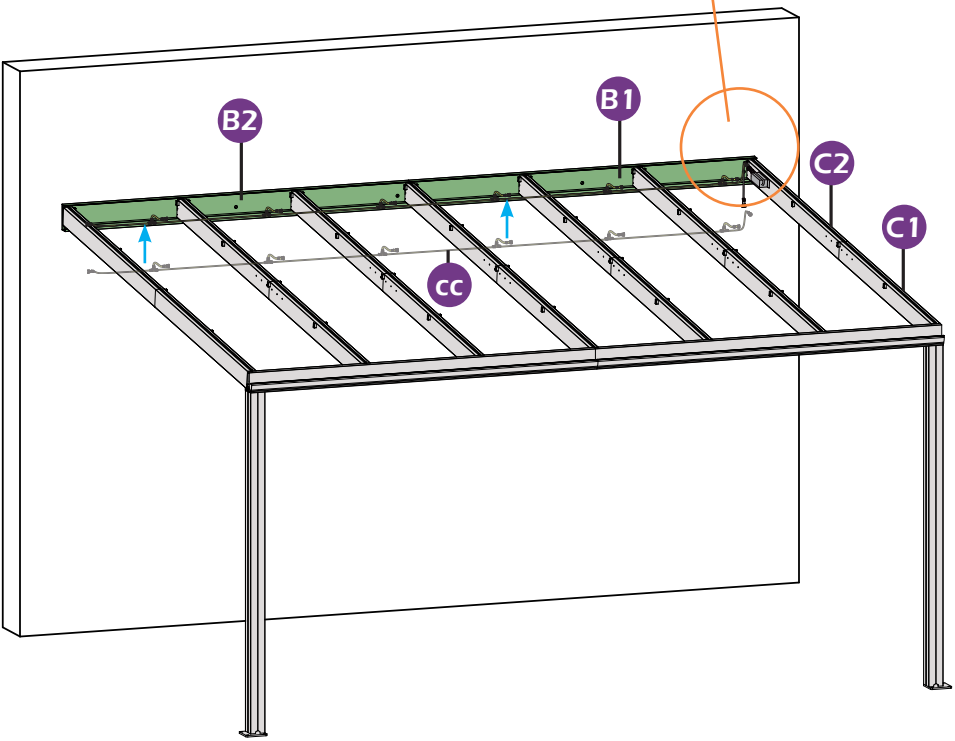

STEP 2

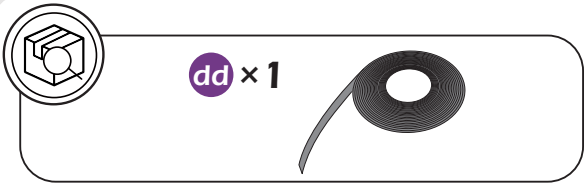

First paste the double-sided adhesive tape in the lamp tank.

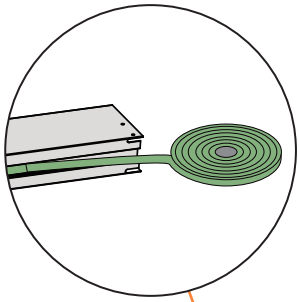

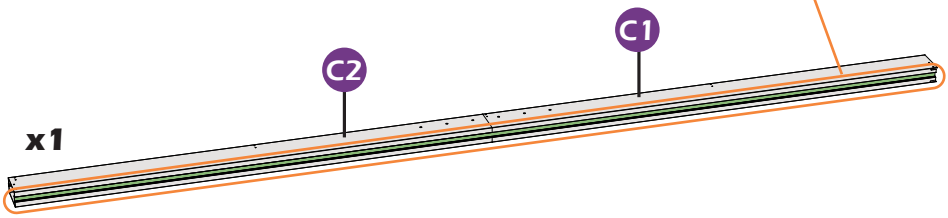

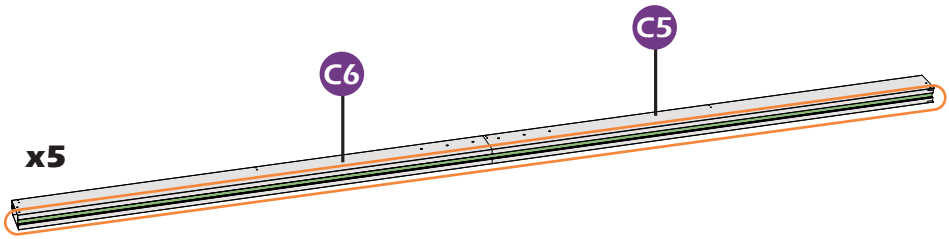

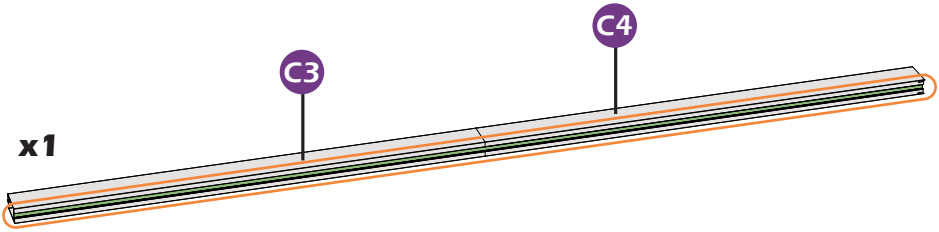

STEP 3

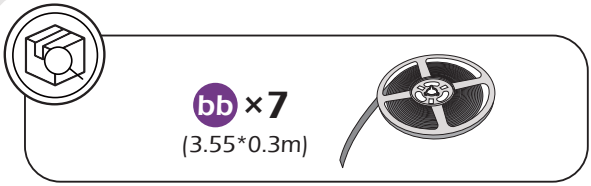

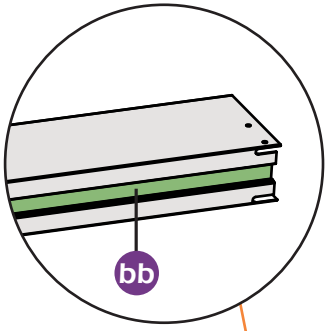

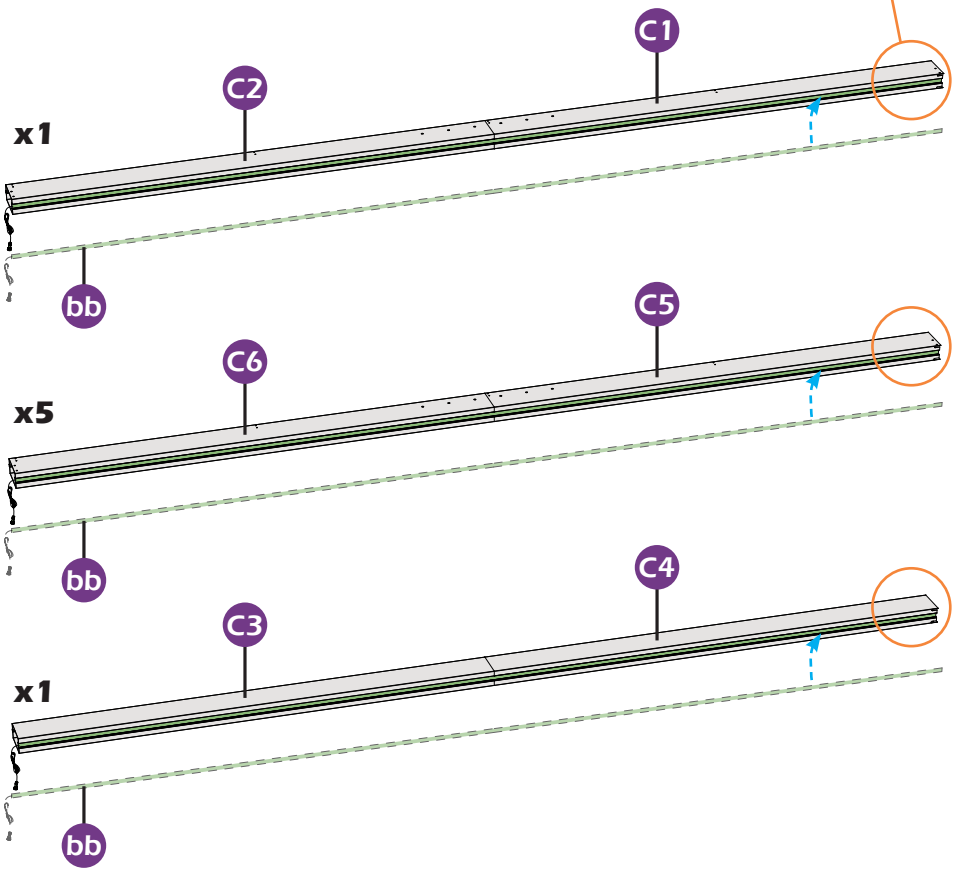

STEP 3

gg × 14
(1.776m)

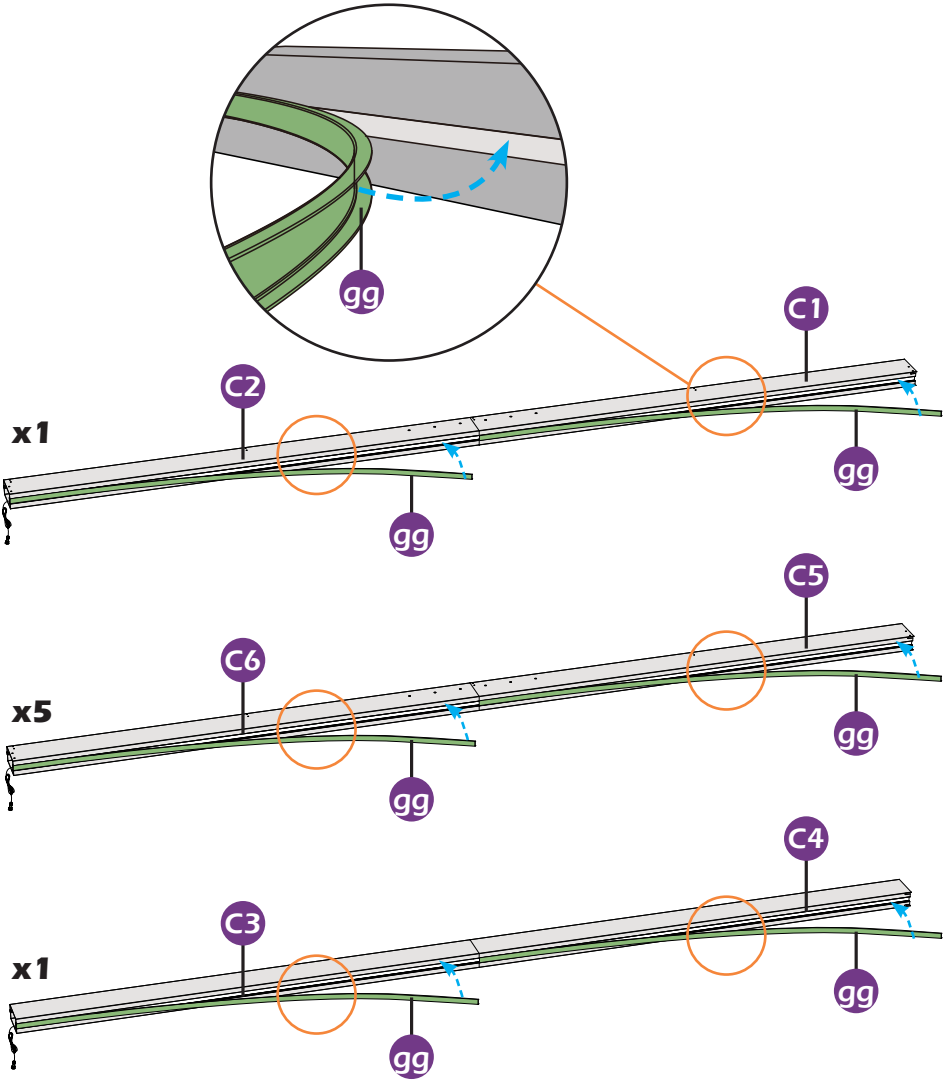

STEP 3

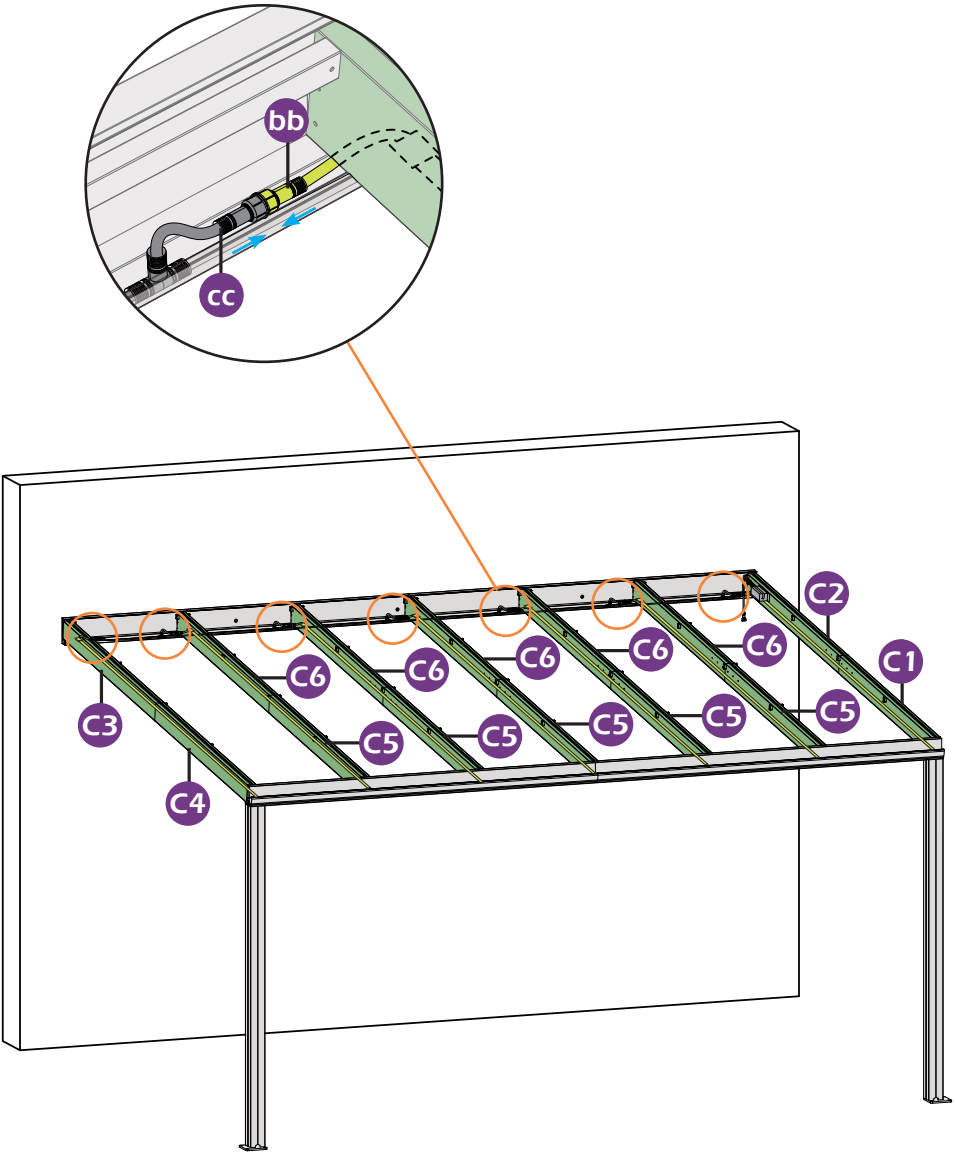

STEP 3

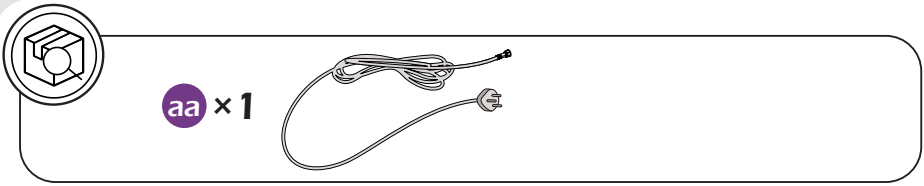

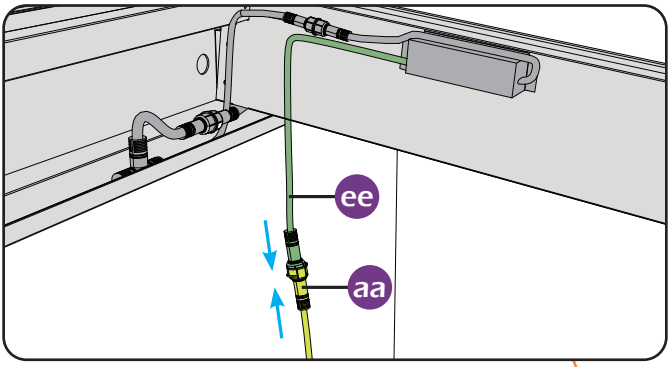

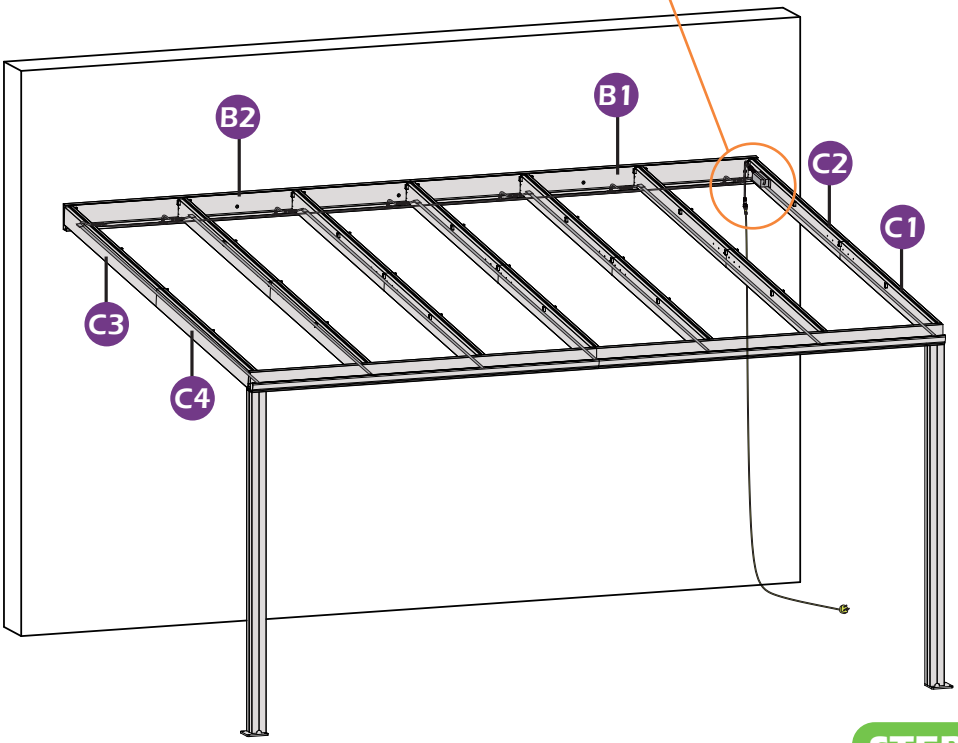

STEP 4

Remote Control Instructions

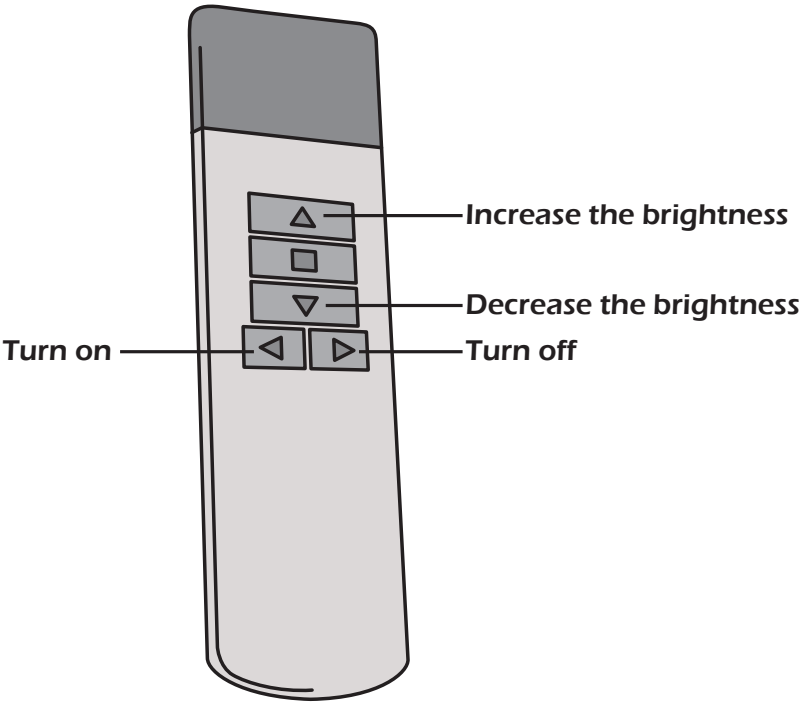

* Single-color light strip, with 5 brightness levels.

Warranty

Bolts & Nuts

Bolts and nuts are warranted to be free from defects in material and workmanship for 1 year from item purchased. Damage from exposure to chemicals (including not only oils, spills, fluids) won't be covered by this warranty.

Warranty Limitation

This warranty is for the original purchase order only. (Order number required). This warranty is non-transferable. Purple Leaf is responsible for the free replacement part including shipping charges for the 1 year warranty.

Warranty Exclusion

This warranty does not cover products subject to negligence, abuse usage, inappropriate installation. Purple Leaf reserves the right to explain warranty exclusions. When the replacement item is applied, the 1 year warranty automatically expires. Please feel free to contact us to apply for a warranty.

Purple Leaf Inc.
15950 Boyle Avenue, Fontana
CA, 92337, US
pergola@purpleleafgarden.com
©Copyright 2013-2026 Purple Leaf Inc.
All Rights Reserved.V.1

FCC Warnning:

This equipment has been tested and found to comply with the limits for a Class B digital device, pursuant to part 15 of the FCC Rules. These limits are designed to provide reasonable protection against harmful interference in a residential installation. This equipment generates, uses and can radiate radio frequency energy and, if not installed and used in accordance with the instructions, may cause harmful interference to radio communications. However, there is no guarantee that interference will not occur in a particular installation. If this equipment does cause harmful interference to radio or television reception, which can be determined by turning the equipment off and on, the user is encouraged to try to correct the interference by one or more of the following measures:

- Reorient or relocate the receiving antenna.
- Increase the separation between the equipment and receiver.
- Connect the equipment into an outlet on a circuit different from that to which the receiver is connected.
- Consult the dealer or an experienced radio/TV technician for help.

Caution: Any changes or modifications to this device not explicitly approved by manufacturer could void your authority to operate this equipment.

This device complies with part 15 of the FCC Rules. Operation is subject to the following two conditions:

(1)This device may not cause harmful interference, and (2) this device must accept any interference received, including interference that may cause undesired operation.

This equipment complies with FCC radiation exposure limits set forth for an uncontrolled environment. This equipment should be installed and operated with minimum distance 0cm between the radiator and your body.