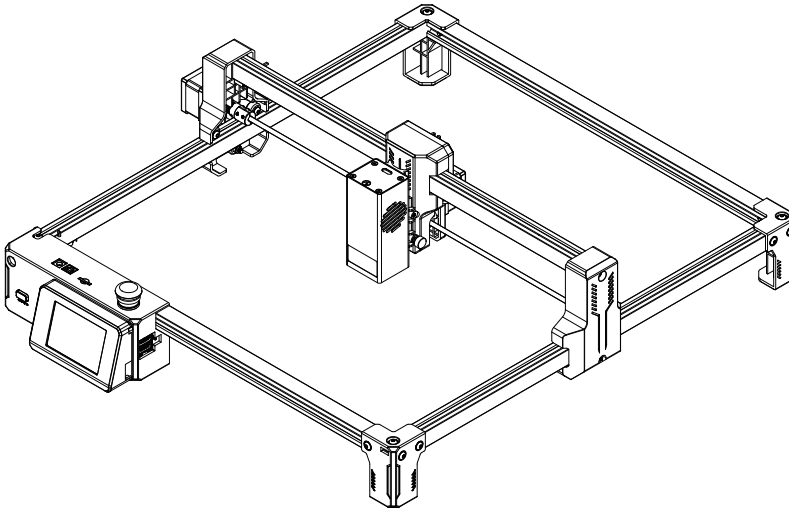

LASER ENGRAVER Prex

Table of Contents

1.FCC Requirement 1

2.Laser Engraver Introduction 5

3.Packing List 6

4.Assembly Steps 11

5.Machine Calibration 22

6.Machine Testing 24

FCC Requirement

Any changes or modifications not expressly approved by the party responsible for compliance could void the user' s authority to operate the equipment.
This device complies with Part 15 of the FCC Rules. Operation is subject to the following two conditions:
(1) this device may not cause harmful interference, and
(2) this device must accept any interference received, including interference that may cause undesired operation.
Note:
This equipment has been tested and found to comply with the limits for a Class B digital device, pursuant to Part 15 of the FCC Rules. These limits are designed to provide reasonable protection against harmful interference in a residential installation. This equipment generates, uses, and can radiate radio frequency energy, and if not installed and used in accordance with the instructions, may cause harmful interference to radio communications. However, there is no guarantee that interference will not occur in a particular installation. If this equipment does cause harmful interference to radio or television reception, which can be determined by turning the equipment off and on, the user is encouraged to try to correct the interference by one or more of the following measures:
– Reorient or relocate the receiving antenna.
– Increase the separation between the equipment and receiver.
– Connect the equipment into an outlet on a circuit different from that to which the receiver is connected.
– Consult the dealer or an experienced radio/TV technician for help.

FCC Radiation Exposure Statement:
This equipment complies with FCC radiation exposure limits set forth for an uncontrolled environment. This equipment should be installed and operated with minimum distance 20 cm between the radiator & your body.

! CAUTION !

1. Prex engraves and cuts materials through a high-energy diode laser beam. Hazards associated with high-energy diode laser beams include causing fires, generating harmful and/or irritating toxic smoke, but more importantly, damage to the eyes and skin.

2. Laser engravers are classified into several internationally recognized categories based on their performance and injury risk. Prex belongs to Class IV (IEC standard Class 4 focuses on US FDA classification).

Laser Class	Class Definition
Class I	Class I laser radiation levels are not considered hazardous.
Class IIa	Class IIa laser radiation levels are not considered hazardous for viewing times less than or equal to 1×10^3 seconds, but are considered chronic viewing hazards for viewing times greater than 1×10^3 seconds.
Class II	Class II laser radiation levels are considered chronic viewing hazards.
Class IIIa	Class IIIa laser radiation levels, depending on irradiance, may be acute beam-in-the-eye viewing hazards or chronic viewing hazards; if viewed directly with optical instruments, they are acute viewing hazards.
Class IIIb	Class IIIb laser radiation levels are considered acute direct radiation hazards to the skin and eyes.
Class IV	Class IV laser radiation levels are considered acute direct and scattered radiation hazards to the skin and eyes, as well as direct and scattered radiation hazards to the skin and eyes.

3. High-energy laser beams can cause serious eye injuries, including blindness, and severe skin burns.

4. Improper use of control devices or modification of safety functions may result in serious eye injuries and burns.

Please wear personal protective equipment (PPE. Safety glasses are designed to filter specific wavelengths of laser. The provided Prex safety glasses are specifically designed for the laser module) when using the engraver.

Do not stare directly at the laser beam;
Do not aim the laser beam at reflective surfaces;
Do not operate the laser near the Prex without wearing PPE;
Do not allow unsupervised access to the Prex by children;
Do not let pets approach the Prex;
Do not modify or disable any safety features of the laser system;
Do not touch the high-energy laser beam.

5. We strongly recommend placing the machine in a well-ventilated room with a sealed door and curtains on windows to effectively avoid direct viewing of the laser beam as well as smoke, steam, particles, and other highly toxic substances.

6. The high-energy diode laser beam generates extremely high temperatures and a large amount of heat due to material combustion during engraving and cutting. Certain materials are prone to ignition during cutting operations, producing flames, smoke, and steam.

7. Although Prex has built-in flame sensors, this technology should not be considered 100% accurate and should only be used as a warning system.

8. During Prex operation, if flames are detected, the machine will stop the laser and sound an alarm for abnormal conditions. Please pay attention to the machine's operating status.

9. During operation, ensure that any flash fire/flame is properly controlled and extinguished.

Laser Engraver Introduction

1. Y-axis motor
2. X-axis frame
3. Laser module
4. Touch screen
5. Synchronous shaft
6. Support feet
7. Left frame
8. Rear frame
9. X-axis motor
10. Laser bracket
11. Power port
12. USB port
13. TF card port
14. Emergency stop
15. Front frame
16. Right frame
17. Power switch

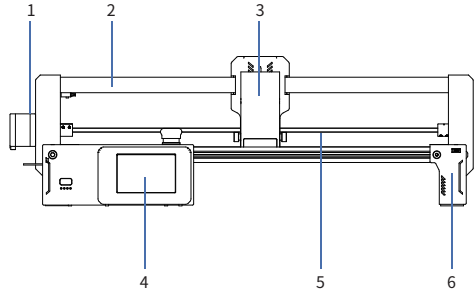

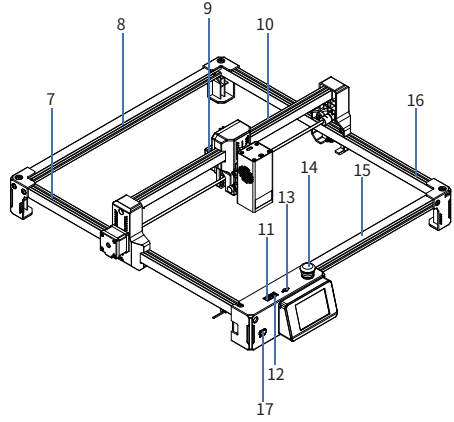

Packing List

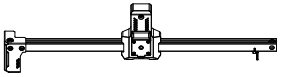

Left frame module

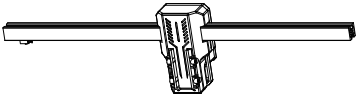

Laser bracket module

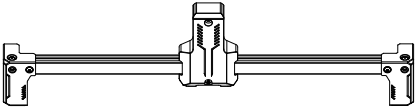

Right frame module

Front frame

Rear frame

Synchronous shaft

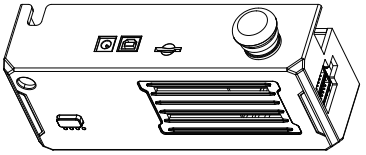

Control box with wire

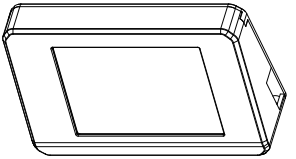

Touch screen with wire

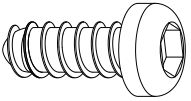

M3X8 self-tapping screws X2

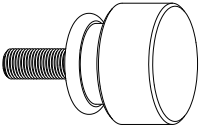

M3X10 thumb screws X2

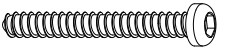

M3X25 self-tapping screws X2

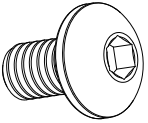

M5X8 screws X3

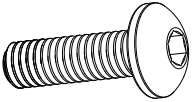

M5X16 screws X3

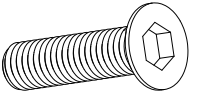

M5X20 countersunk screws X1

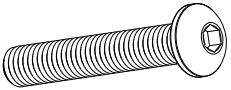

M5X30 screws X3

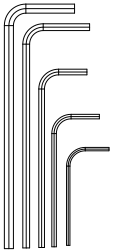

Wrench kit

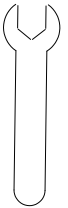

Open-end wrench

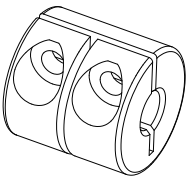

Couplings X2

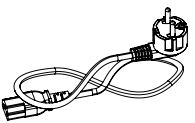

Power cord

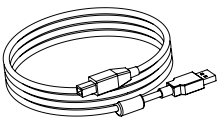

Data cable

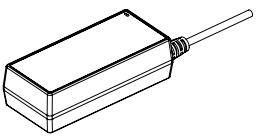

Power adapter

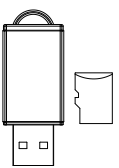

TF card

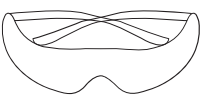

Safety goggles

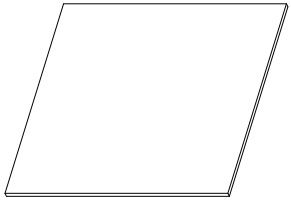

Acrylic sheets X2

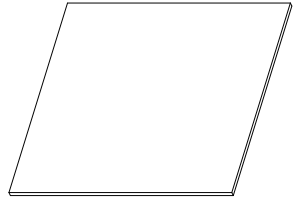

Plywood X2

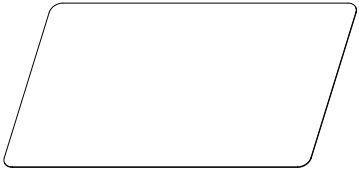

Aluminum sheets X4

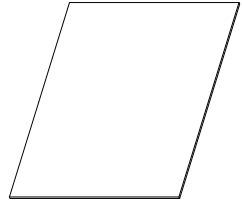

Kraft cardstock X4

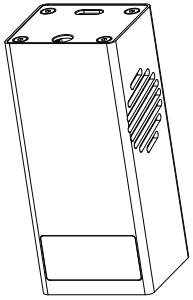

20W Laser Head

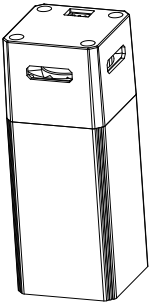

10W Laser Head

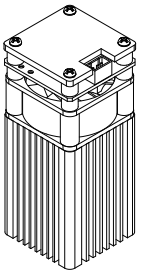

5W Laser Head

(Provided according to model)

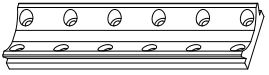

5W/10W Laser Head
Mounting Block and Screws

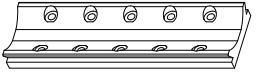

20W Laser Head
Mounting Block and Screws

(Provided according to model)

Assembly Steps

1. Assemble the left frame module with the front frame, rear frame, and laser bracket.

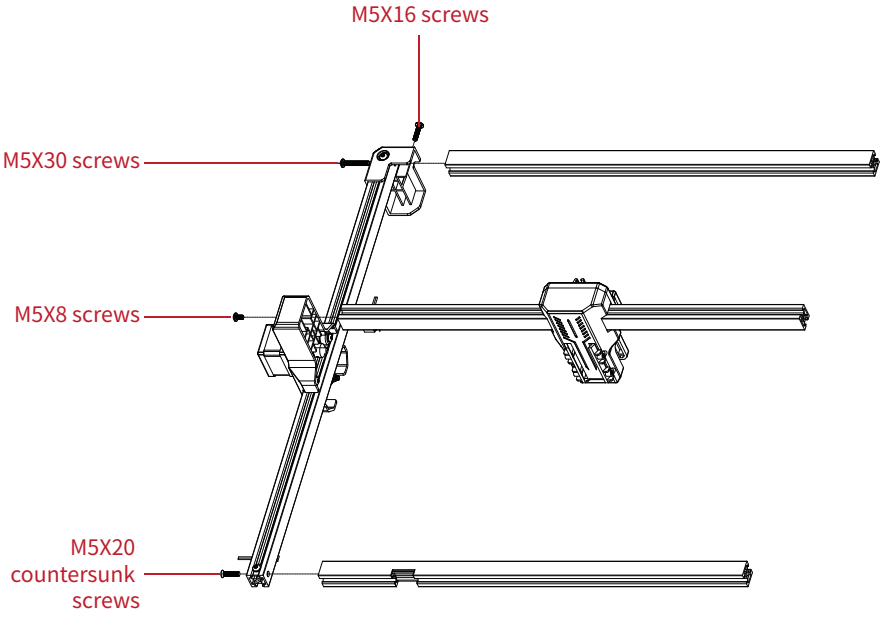

2. Assemble the right frame module with the front frame, rear frame, and laser bracket.

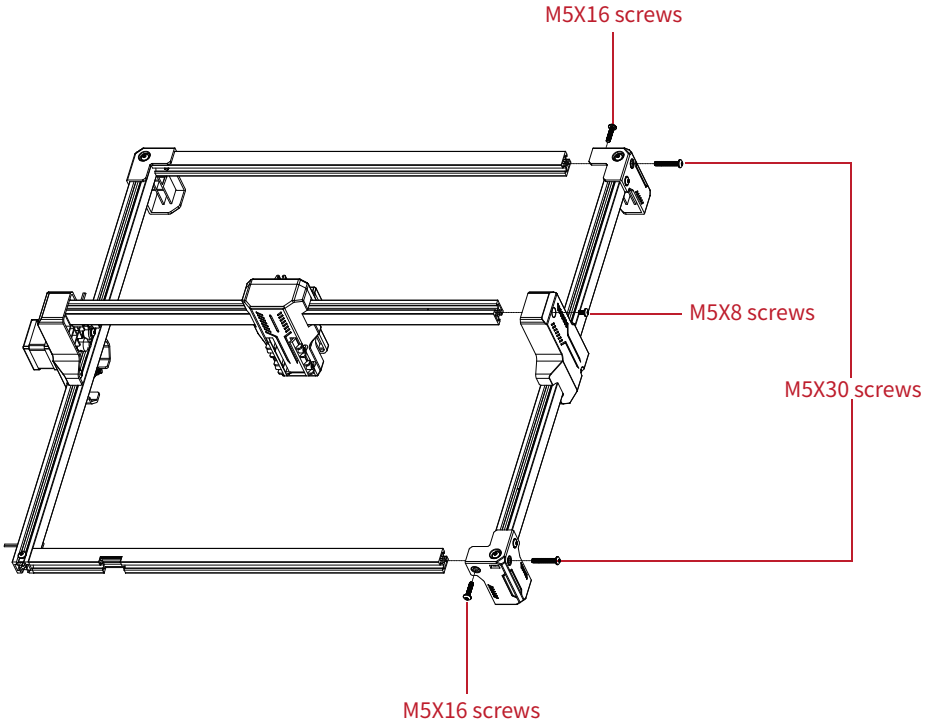

3. Assemble the control box with the front frame.

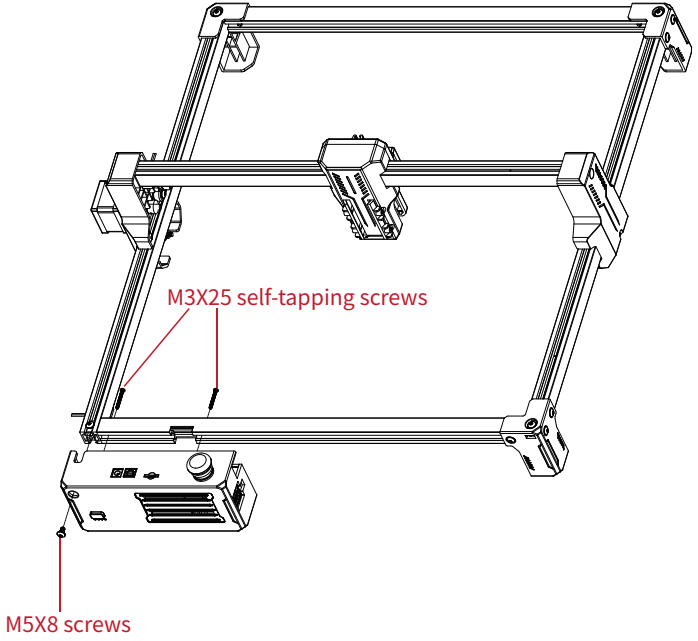

4. Hang the hook on the back of the screen on the control box louver.

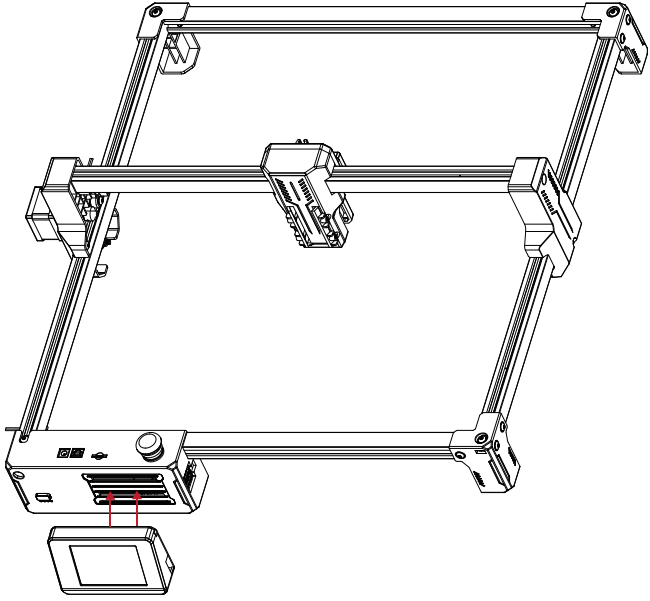

5. Synchronous shaft assembly.

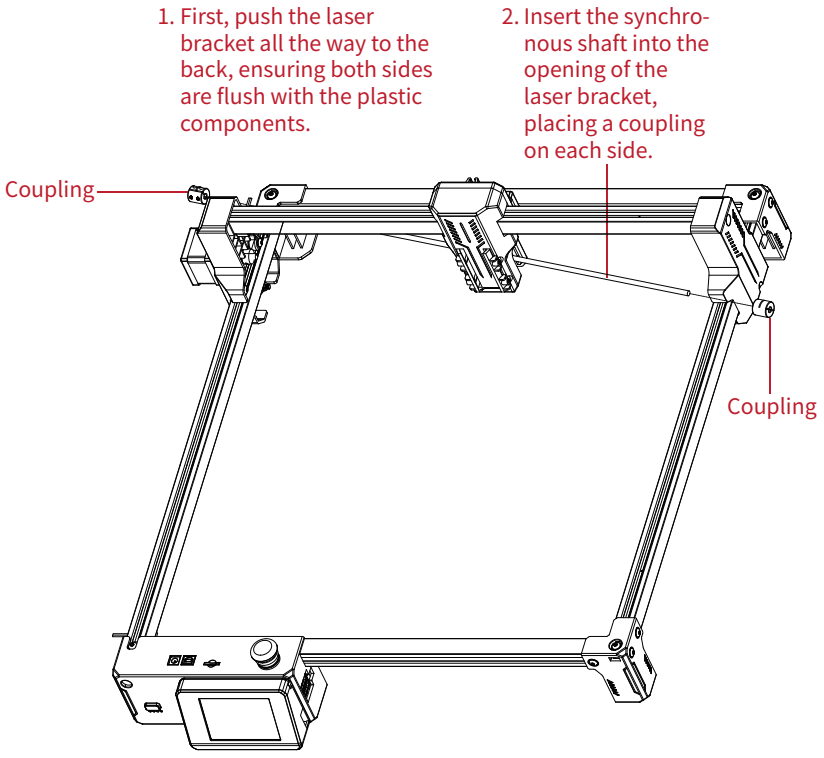

Push both couplings inward and rotate the synchronous shaft so that it is parallel to the laser bracket.

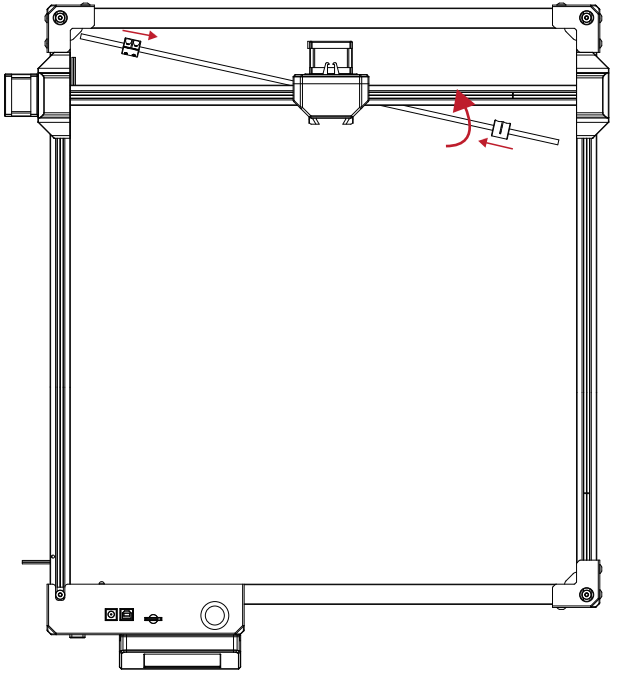

Push both couplings outward so that the couplings fit over the shafts on both sides, then tighten the couplings with a wrench.

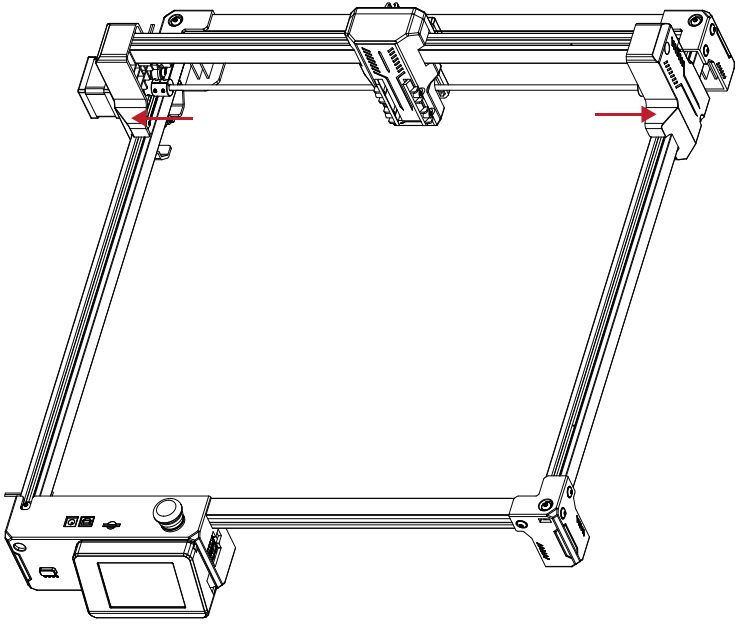

6. Laser head assembly.

Secure the laser head backplate
with the provided M3 screws.

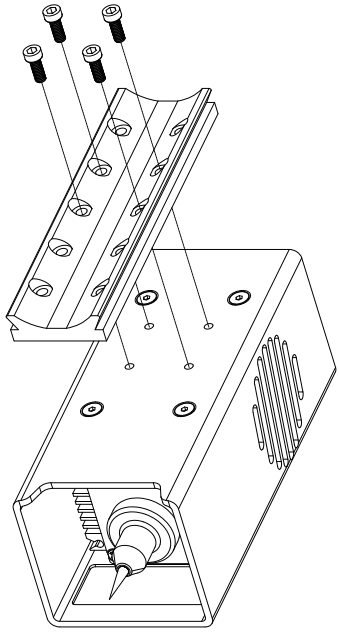

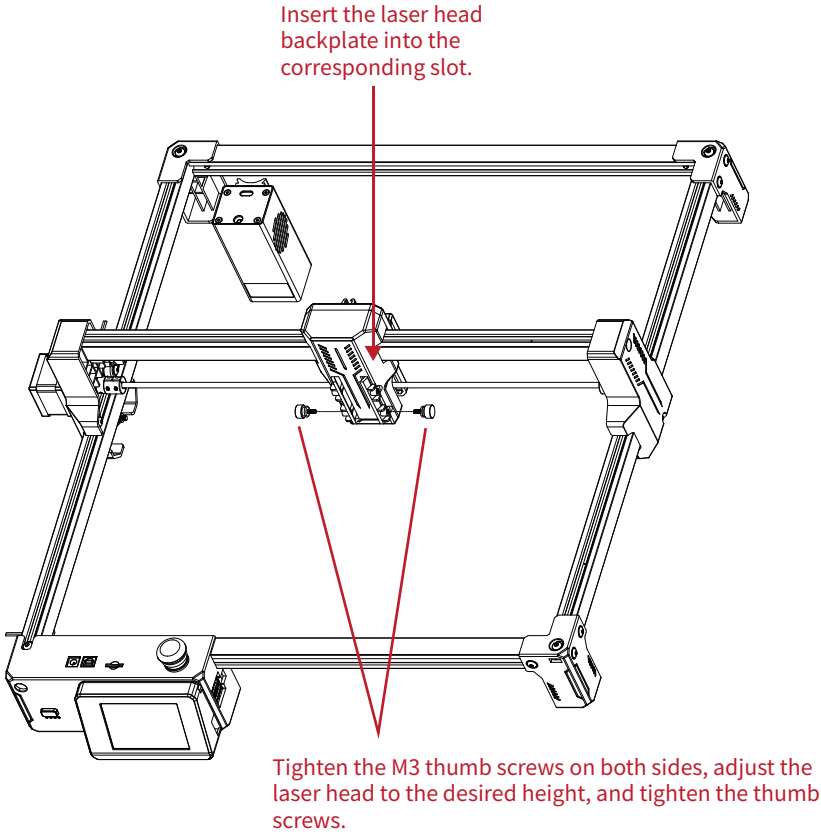
Insert the laser head backplate into the corresponding slot.
Tighten the M3 thumb screws on both sides, adjust the laser head to the desired height, and tighten the thumb screws.

7. Wire harness Mylar sheet assembly

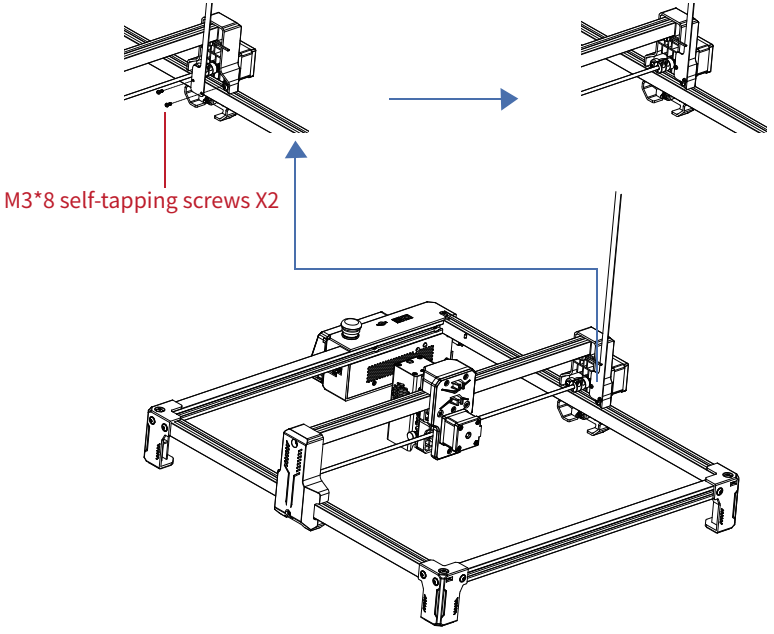

8. Wiring

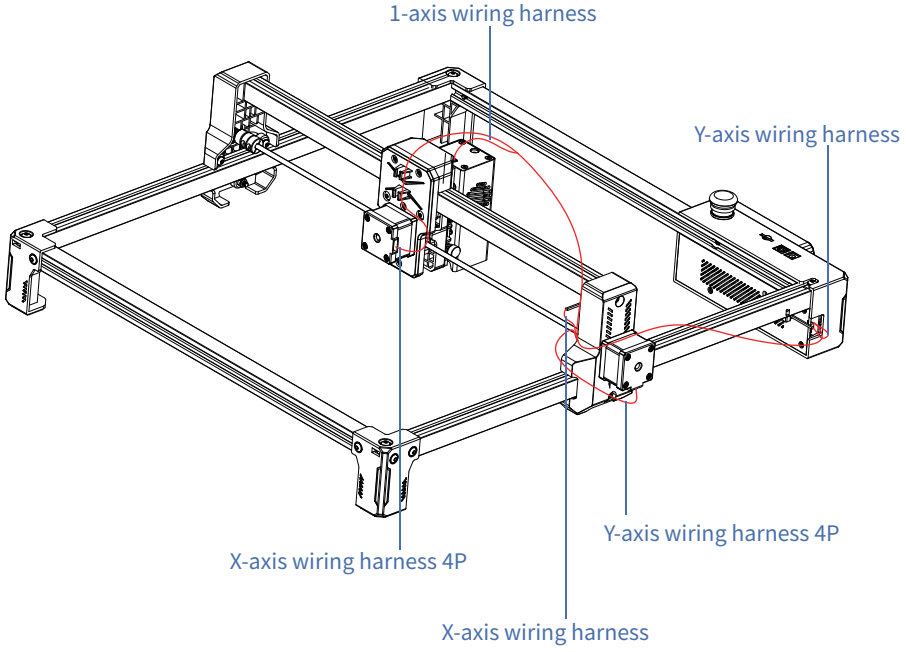
1-axis wiring harness
Y-axis wiring harness
Y-axis wiring harness 4P
X-axis wiring harness 4P
X-axis wiring harness

1. Adjusting Eccentric Nuts

Check whether the POM wheels of the left and right frames and laser bracket match the aluminum profiles, and whether the movement is smooth without jamming.

Notes:

1. Optimal condition: When rotating the POM wheel, you should feel slight friction between the POM wheel and the aluminum profile.
2. If the wheel rotates in the air without contacting the aluminum profile, use an open-end wrench to adjust the eccentric nut.

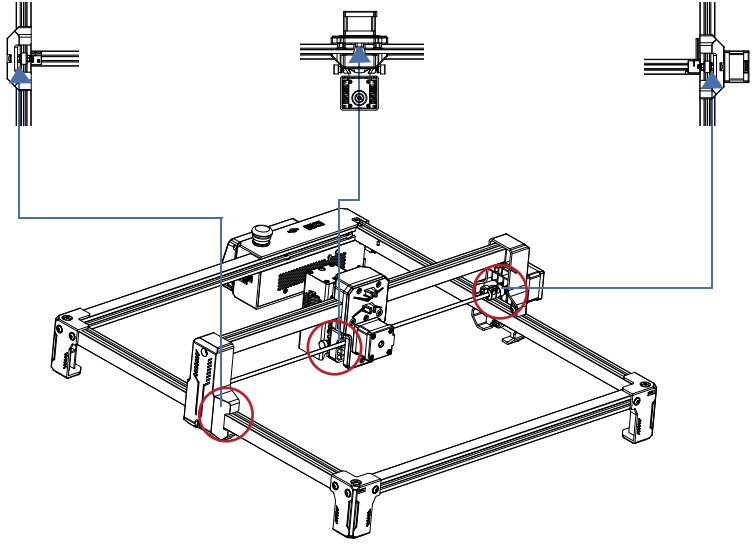

2. Laser Module Focusing

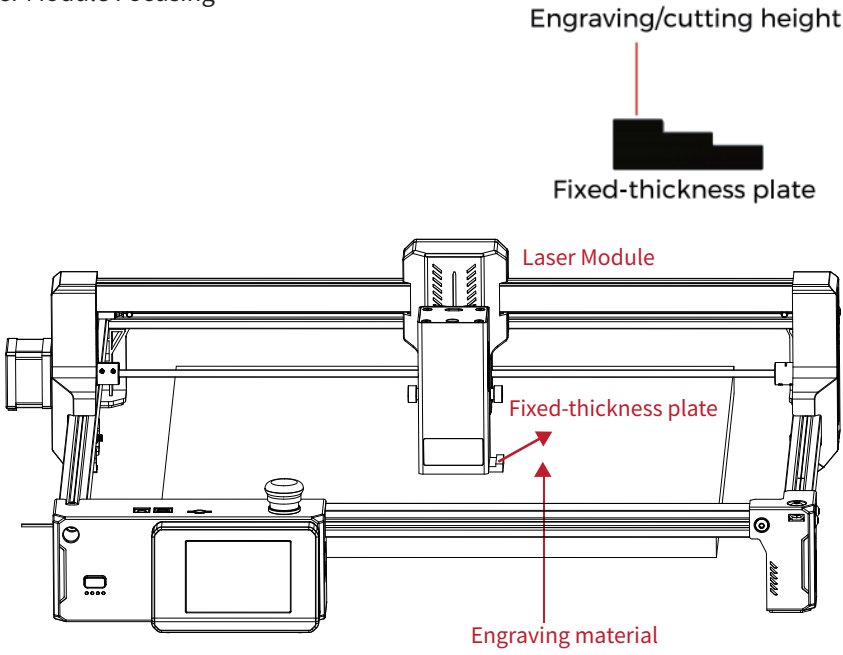

Machine Testing

1. Software Download

LaserGRBL is one of the most popular DIY laser engraving software currently available, downloadable from the LaserGRBL website http://lasergrbl.com/download (installation packages are also available on the manufacturer-provided TF card or USB drive).

Introduction: LaserGRBL is easy to use. However, LaserGRBL only supports Windows systems (WinXP/Win7/Win8/Win10). For Mac users, you can also choose LightBurn, which is also an impressive engraving software, but it is not free. This software also supports Windows systems.

2. Software Installation

Double-click the software installation package to begin software installation, then click "Next" until installation is complete.

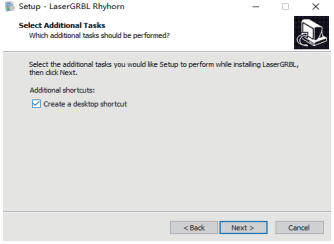

3. Language

Click "Language" at the top menu and select your preferred language.

4. CH340 Driver Installation

Method 1: Click "Tools" in the menu to install the CH340 driver (this feature is not available in some software versions).

Method 2: Copy the "CH340SER" file from the TF card to your computer and install it.

5. Power-On Self-Test

5.1 Connect the power cord to the DC port of the motherboard.

5.2 Press the power button to turn on the machine. Press the power button briefly 3 times, and the machine will run a test program (after returning to the origin, it will traverse the maximum engraving area twice).

6. Connecting to Computer

1. Connect the machine to the computer with a data cable.
2. Open LaserGRBL on the computer.
3. Select the specific port number and baud rate - 115200 (Figure A).
4. Click the green plug icon (Figure B). When the direction indicator lights up, it indicates a successful connection (Figure C). Generally, there is no need to manually select the COM port unless multiple serial devices are connected to the computer. You can find the computer's port in the Windows Device Manager (as shown in Figure D). A simpler method is to try the displayed port numbers one by one.

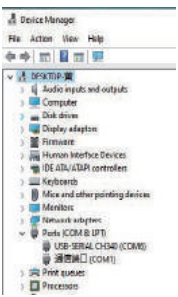

Figure D

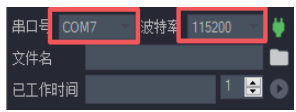

Figure A

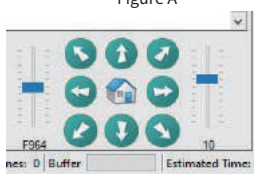

Figure C

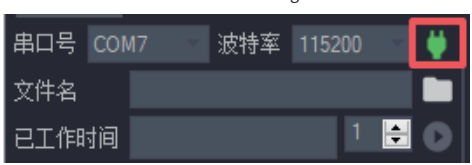

Figure B

7. Loading Engraving Files

Click "File" and then "Open File" sequentially, as shown in the figure, then select the graphic to be engraved. LaserGRBL supports files in NC, BMP, JPG, PNG, and other formats.

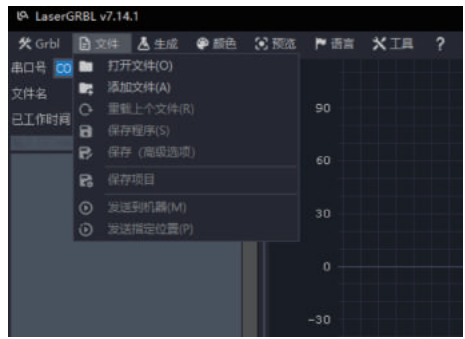

8. Setting Image Parameters, Engraving Mode, and Engraving Quality

1. LaserGRBL can adjust sharpness, brightness, contrast, highlights, and other properties of the target image. We can preview the window effect during adjustment and fine-tune to achieve satisfactory results.
2. In engraving mode, you can typically choose between "Line To Line Tracing" and "1bit Bw Dithering". "1bit Bw Dithering" is more suitable for engraving grayscale images. For cutting, please select "Vectorize" or "Centerline".
3. Engraving line width primarily refers to the laser scanning line width. This parameter mainly depends on the size of the engraving machine's laser spot. Note: The recommended engraving quality range is 12-15. Different materials react differently to laser irradiation, so specific values depend on the specific engraving material.
4. At the bottom of the preview window, you can also rotate, mirror, cut, and perform other operations on the graphics. After completing the above settings, click next to enter the settings for engraving speed, engraving power, and engraving size.

Color adjustment; Intensity adjustment

Select engraving mode

Quality: 12-15 (Recommended)

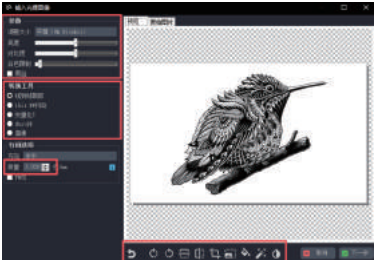

Direction adjustment; Pattern cutting

9. Setting Engraving Speed, Engraving Power, and Engraving Size

1. The recommended engraving speed is 8000, which is considered relatively appropriate after repeated experiments. Of course, you can increase or decrease this speed according to your preferences. Faster engraving speeds save time but lead to reduced engraving quality.
2. In laser mode, there are two commands: M3 and M4. If your laser only has the M3 command, please check whether this laser mode is used for GRBL configuration. For GRBL configuration, please refer to the official LaserGRBL instructions.
3. Engraving power selection. Choose according to different materials.
4. Finally, set the dimensions and click the "Create" button to complete all engraving parameter settings.

Default engraving speed is 1000, adjustable as needed

Set power value - excessive power affects engraving quality

Enter the dimensions of the graphic to be engraved

10. Starting Engraving

After returning to the main interface, click the Start button as shown to begin engraving.

TEL：+1-888-909-8850
Email：OfficeProducts@nbdeli.com