ZENTRON

MEGA

Thermal imaging device

MEGA SERIES (Multi-function Thermal Imaging Device)

User Manual

MODEL:CQ25R

FCC ID:2BVLG-MEGA-CQ25R

Table of Contents

1. Important Safety Information 2
2. Specifications 2
3. In The Box 4
4. Features 5
5. Components and Controls 5
6. Button Operation 6
7. Battery Charging Instructions 6
8. Installation 7
9. Startup & Standby 9
10. Focusing 9
11. Status Bar Overview 10
12. Zeroing 10
13. Calibration 11
14. Photographing & Video Recording 12
15. Measure Distance 13
16. Ballistic Calculation 14
17. Quick Menu 16
18. Main Menu 16
    - Operation Mode 16
    - Wi-Fi 18
    - Bluetooth 19
    - Palettes 19
    - Display Settings 19
    - Scene Mode 20
    - Profile 21
    - Media 22
    - NUC Shutter 22
    - MIC 22
    - Menu Sorting 23
    - Compass Calibration 23
    - Prerecord 23
    - Auto Sleep 24
    - Pixel Correction 24
    - Time/Date 25
    - Language 25
    - Reset Settings 25
    - Erase Media 25
    - About 25
19. Connecting to ZEN LINK App 25
20. Firmware Upgrade 26
21. File Transfer to PC 27
22. Maintenance & Cleaning 28
23. Troubleshooting (FAQ) 28
24. Legal & Compliance 28
25. Caution 29
26. Contact & Support 30

1. Important Safety Information

1.1 Environmental Warnings

- Avoid direct exposure of lens to intense light sources such as the sun or lasers.
- Operating temperature: -20°C to +50°C
- Do not store at extreme temperatures.
- When used in extremely cold environments, the battery life of the device will be reduced. This is normal and does not indicate a malfunction of the device.

1.2 Ergonomics and Handling

- Take breaks during extended use to avoid eye fatigue.
- Keep out of reach of children – small parts may be hazardous.
- After using the device, please close the lens cover of the device to prevent sharp objects from scratching the lens of the device.
- Disassembling or repairing equipment through unofficial channels will invalidate the repair warranty.

1.3 Battery and Charging Safety

- Use only with manufacturer-approved 18650 batteries.
- Do not reverse battery polarity.
- Only charge between 0°C and 50°C.
- Never leave batteries unattended during charging.
- When the device is idle for a long time, the battery should be removed.
- Do not use 18650 batteries with USB charging interface, as it will damage the device charging compartment.

2. Specifications

Series	MEGA
Product	CQ25R
Detector Type	VOx Uncooled
Resolution	640 x 512
Pixel Size	12µm
Framerate	50Hz
Spectral Range	8~14µm

NETD	≤18mK
Safety class for laser	Class 1
Wavelength	905nm
Max. measuring range	1200m(1312 yards)
Measurement accuracy	±1
Min. measuring range	5m(5.47 yards)
Objective Lens	25mm,F0.9
Field of View	17.5°(H) x 14°(V)
Close-up Range	5m(5.47 yards)
Detection Range	1500m (1640 yards)
Optical Magnification	Monocular mode: 1.7× Scope mode: 1.4× Helmet mode: 1.1× Clip-on mode: 1×

E-Zoom	Monocular mode: 1.7~13.6× Scope mode: 1.4~11.2× Helmet mode: 1.1~8.8× Clip-on mode: 1×
Palettes	White hot/Black hot/Iron red/Tint...
Start-up Time	<5 seconds
WiFi, Bluetooth & Mic	Support
Sensors	Built-in accelerometer and digital compass
Built-in Memory	64GB
Display Type	OLED
Display Resolution	2560*2560
Battery	1*18650
Max. Battery Life	8 hours
USB Interface	Type-C

Size	153.5 x 76.5 x 50mm(6 x 3 x 2 inch)
Weight	365g(12.87 oz)
Housing Material	Magnesium
Protection Level	IP67
Operating Temp	-20°C~50°C (-4°F~122°F)
Storage Temp	-40°C~50°C (-40°F~122°F)
Max. Recoil	1000g/0.4ms

3. In The Box

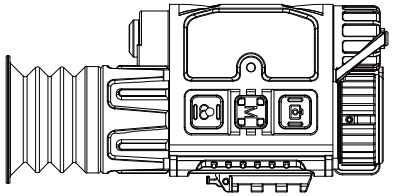

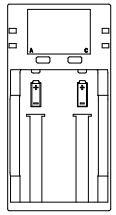

Battery Charger

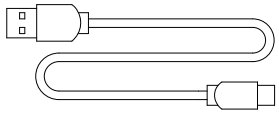

USB Type C Cable

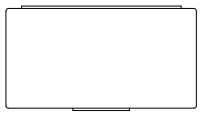

Battery case

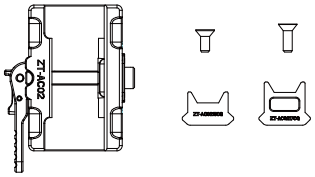

Quick-release Picatinny mount

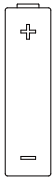

18650 Battery×2(70mm length)

Lens Cloth

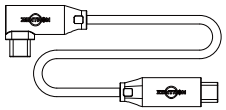

Type C Cable

Battery cap

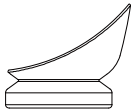

Angled helmet eye visor

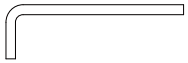

T20 Torx key

T25 Torx key

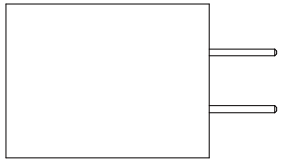

Power adapter

4. Features

- High-sensitivity thermal sensor
- Multi-Role Capability
- AMOLED display with adjustable brightness
- Multiple thermal palettes
- Built-in microphone and video recorder
- Prerecord
- Multiple zero profiles
- Pixel correction utility
- Wi-Fi & Bluetooth enabled

5. Components and Controls

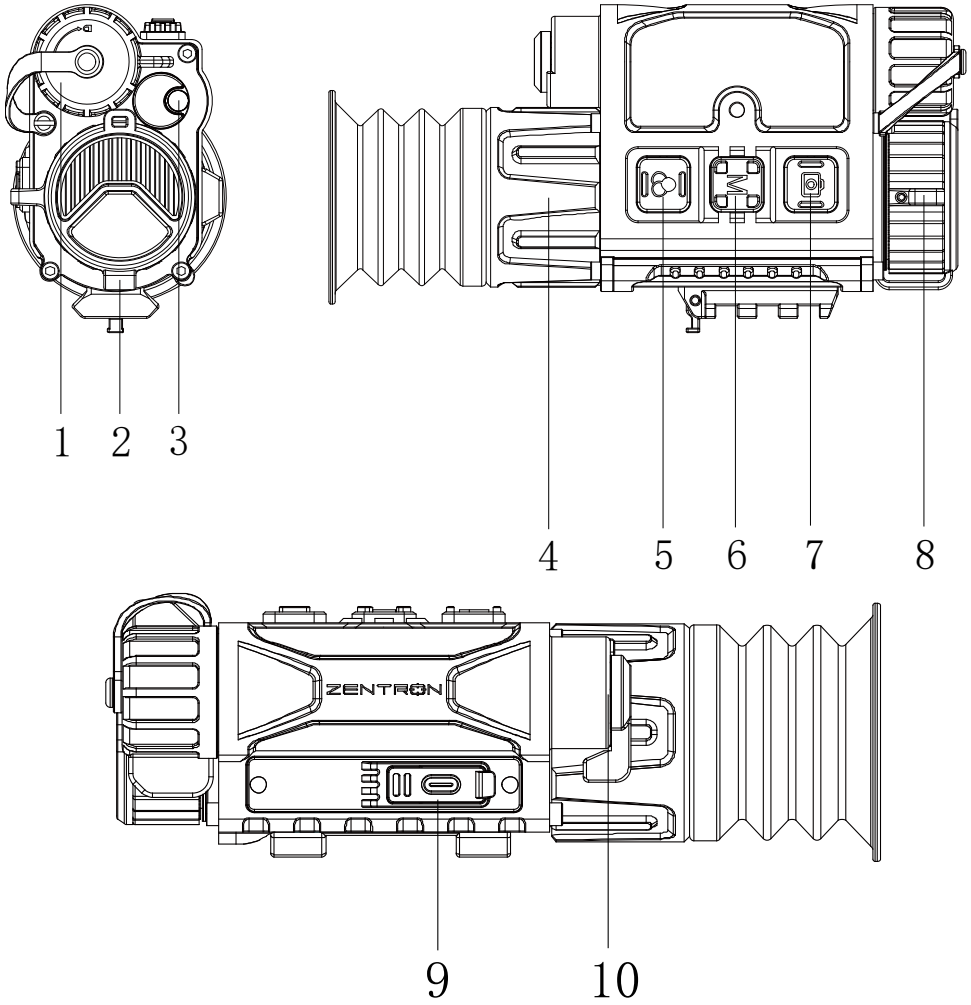

No.	Component
1	Battery cover
2	Lens focus knob
3	Laser rangefinder
4	Eyepiece
5	Palettes button
6	Menu button
7	Capture button
8	Objective lens
9	USB-C port
10	Power button

6. Button Operation

CQ25R		
Button	**Short Press**	**Long Press**
M	Quick menu	Main menu
	Measure distance	Clipon： Switching palettes Scope,Helmet, Monocular: Zoom
	Take a picture	Start/stop recording video
+M		NUC

7. Battery Charging Instructions

Compatible Battery:

Supports only manufacturer-approved **18650 lithium-ion rechargeable batteries**.

Ⓐ Ⓑ control the charging power to enable fast charging.

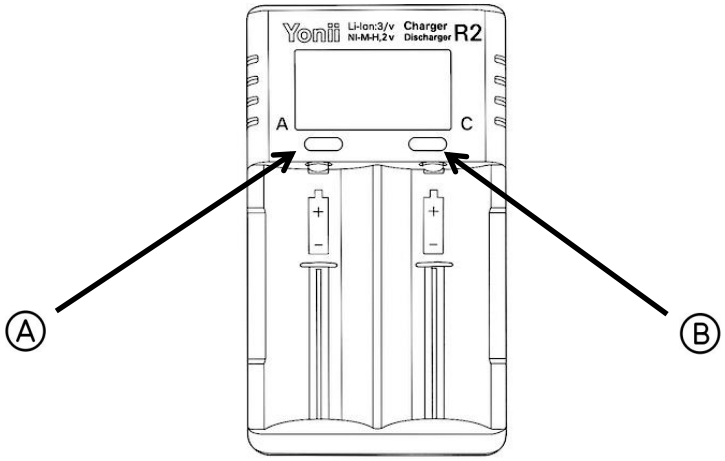

Charging Steps:

1. **Insert Batteries:**
   Place the 18650 batteries into the charger, matching the correct polarity (+/−) as indicated.

2. **Power On:**
   Connect the charger to a USB power source using the included

USB-C cable.

3. **Monitor Charging:**
   Charging status and battery level are displayed on the **LCD screen**. The screen shows real-time voltage, charging progress, and battery condition.

4. **Important Notes:**
   - Do not reverse battery polarity.
   - Do not use 18650 batteries with a built-in USB port.
   - Only charge between **0°C and 50°C**.
   - Remove batteries when not in use for extended periods to maintain battery life.
   - Avoid overcharging or leaving the charger unattended.

8. Installation

Installation Method 1:
Helmet Mode requires the installation of an optional helmet-mounted Picatinny rail on the device.

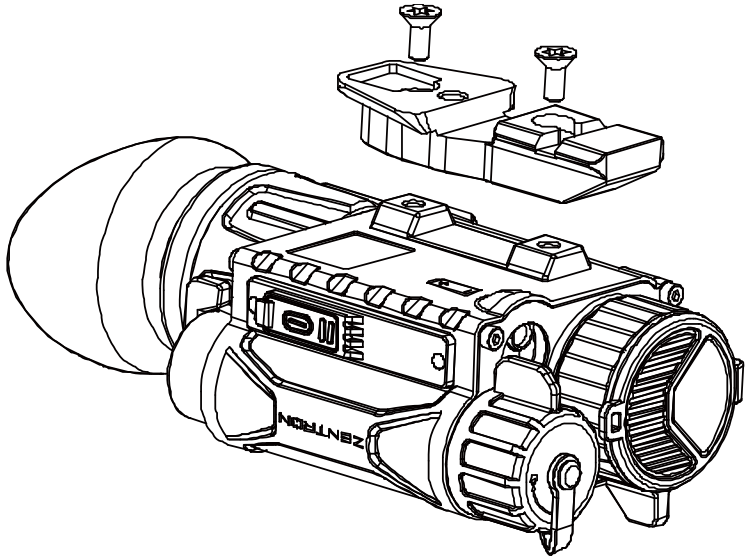

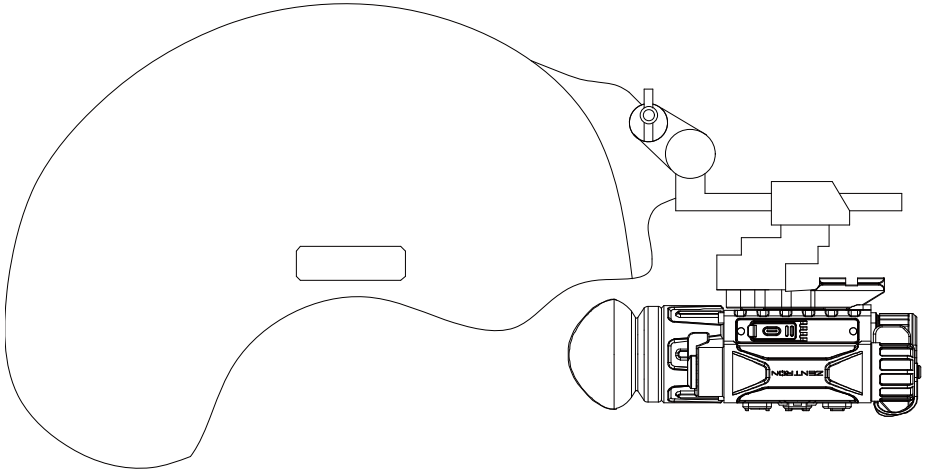

Installation Method 2:
Before installation, clean the base of the device and the mount for the MEGA Series using a lint-free cloth.
The MEGA Series mounts are available in two height options: 1.5 inches and 1.7 inches, with part numbers ZT-AC0215 and ZT-AC0217, respectively.

The part number for the Quick Release Mount is ZT-AC02.

- Align the mounting holes on the device and the mount for the MEGA Series.

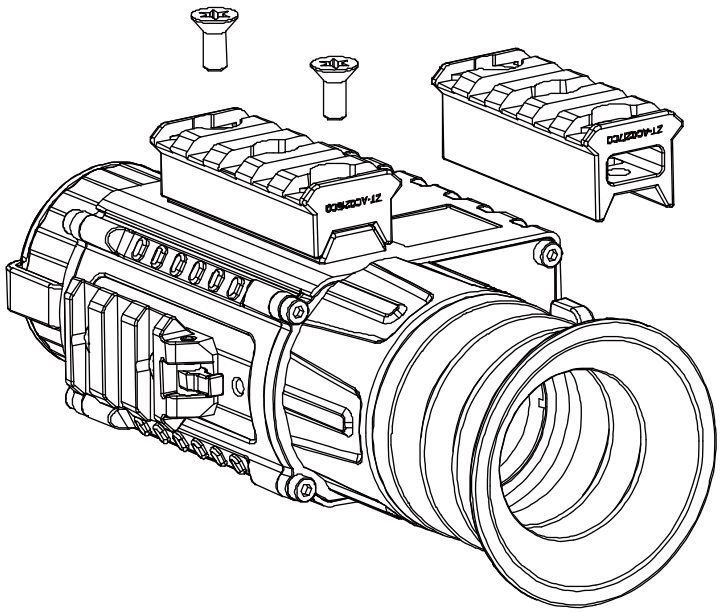

- Insert and tighten the screws.

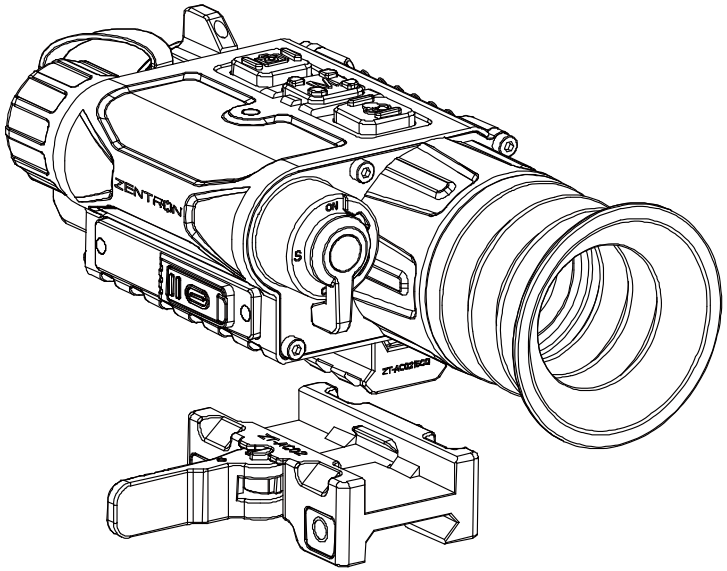

- Mount the device onto the Quick Release Mounts and close the latch.
- Tighten the screws.

The final result is shown in the image below:

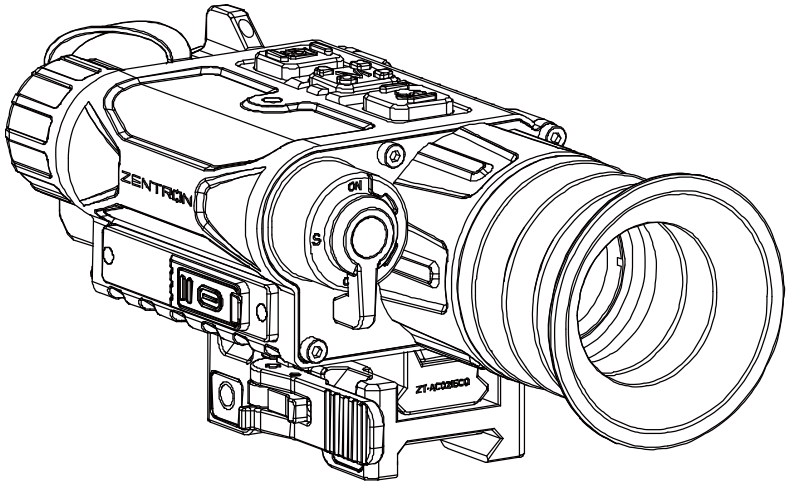

9. Startup & Standby

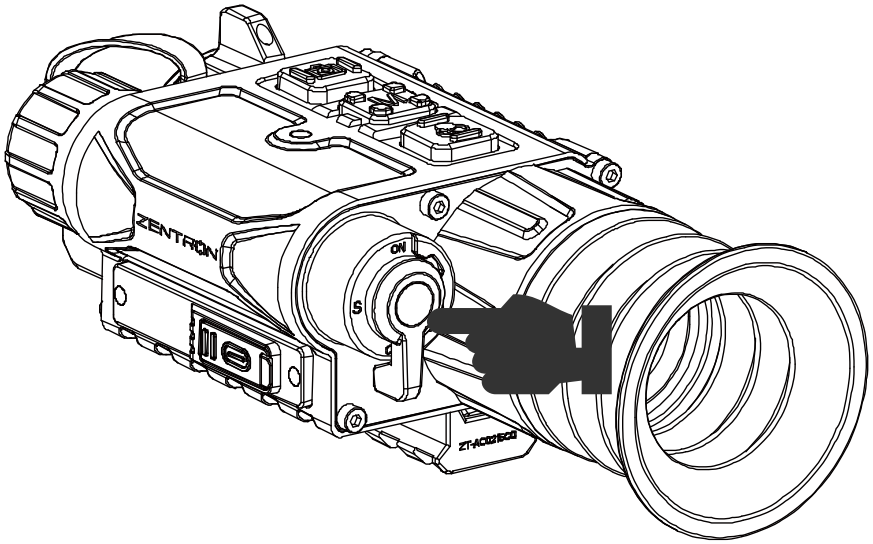

Powering On:

- Set the DIP switch to the “ON” position.

Powering Off:

- Set the DIP switch to the “OFF” position.

Standby Mode:

- Set the DIP switch to the “S” position.
- Auto standby available in menu settings (3–10 min).

10. Focusing

Objective Lens Focus:

- Rotate the focusing lever until the target image is sharp. Refocus as the target distance changes.

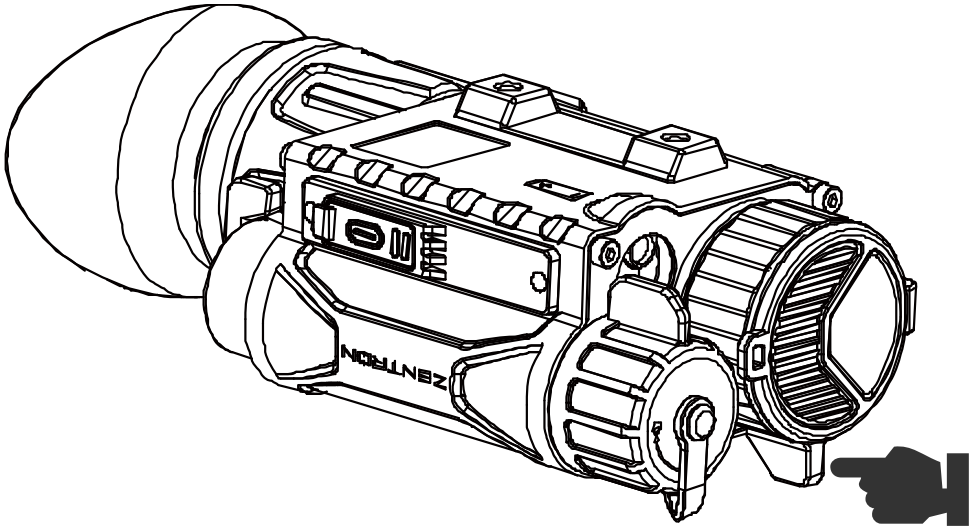

11. Status Bar Overview

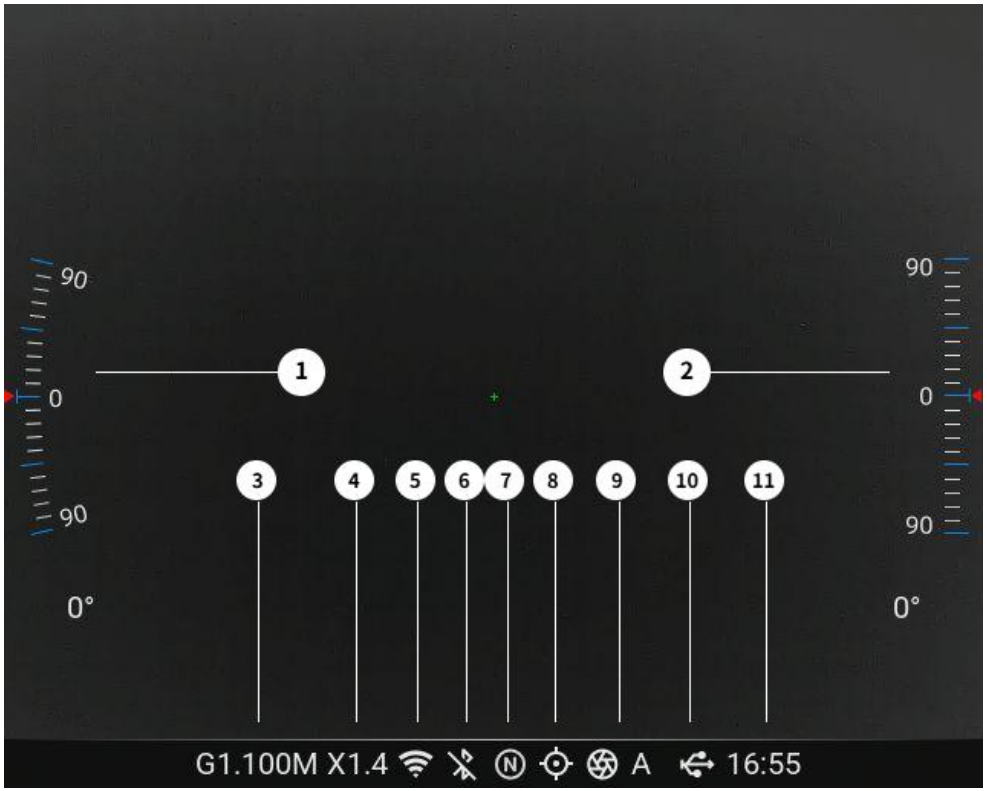

NO.	Description
1	Tilt Angle
2	Pitch Angle
3	Profile
4	Zoom Ratio
5	Wi-Fi
6	Bluetooth
7	Scene Mode
8	Operation Mode
9	NUC Shutter
10	Power Supply Mode
11	Time

12. Zeroing

MEGA series features a unique “Freeze” zeroing method. The steps are as follows:

- In the main menu screen, choose profile.

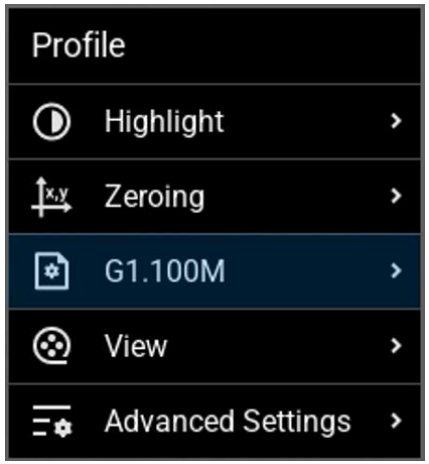

- Select the zeroing function to enter the zeroing screen. The coordinate position of the reticle (X axis, Y axis) is displayed in the center of the screen.

- Set Up a Stable Shooting Position: Find a stable shooting position, such as a shooting bench or sandbags, to rest rifle on. Consistency is key for accuracy.

- Fire a Shot: Fire a single shot at a chosen target. Aim for the center.

- If the bullet hole and the aiming point (the center point of the reticle) dose not match with each other, keep the aiming position still. Do not move the reticle.

- Make sure the center of the reticle is on the aiming point. Then press “Freeze” to freeze the screen.

- Press the menu button to toggle between the x and y axes, then use the up and down buttons to align the crosshair with the bullet hole from their shot.

- Press and hold the menu button again to exit the main menu and save the setting.

- Shoot Again: Fire another shot at the same target after adjusting.

- Confirm Zero: Consistently hit the target at the desired distance, to make sure thermal scope is zeroed. shoot a few more rounds to ensure accuracy and consistency are achieved.

13. Calibration

NUC (Non-Uniformity Correction):

- **Auto**: Triggered regularly by device.

- **Manual**: Long press Palettes button.

- **External**: Close lens cap, long press Palettes button.

14. Photographing & Video Recording

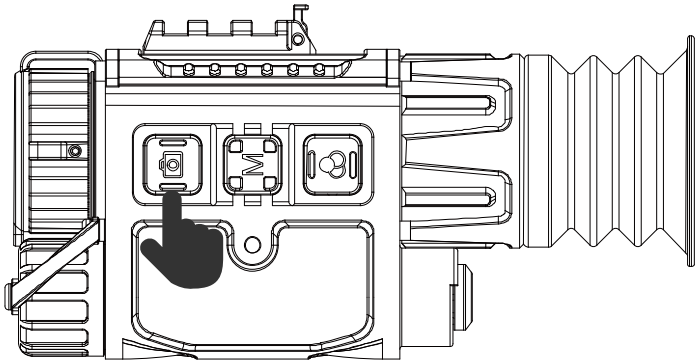

Take Photo:

- Short press the shutter button → brief freeze with photo icon.

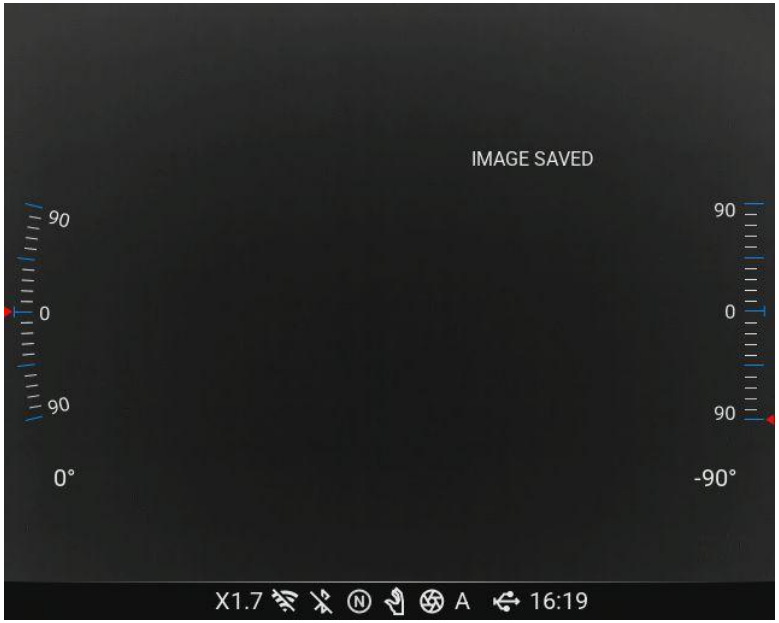

Note:

Make sure the device is properly zeroed before activating the virtual reticle function.

Record Video:

- Long press Capture button → recording icon and timer.
- Press again to stop.

RAV Mode:

- Automatically records 10 to 30 seconds before and 10 to 30 seconds after a recoil event.

All media saved in internal 64GB memory.

15. Measure Distance

Certain models in the MEGA Series are equipped with an integrated LRF module for measuring the distance to a target. When measuring distance, hold the device steady and avoid shaking to ensure accuracy.
This feature provides two distance measurement modes: Continuous and Single. Operation varies depending on the selected mode. You can switch modes via Main Menu > Advanced Settings > LRF.

Warning: Laser radiation emitted by this device can cause eye injuries, skin burns, or ignite flammable materials. Ensure no person or flammable material is positioned in front of the laser lens before activating the laser ranging function.
The device's battery is below 5%, LRF will be automatically disabled.

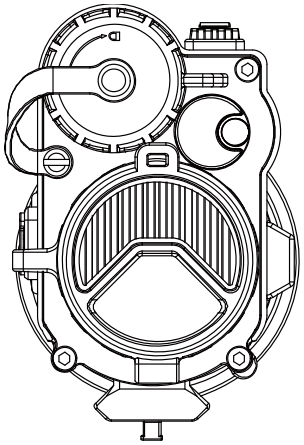

- Continuous: Short press the Palettes button to start measuring. The device will perform continuous measurements for a preset duration and then stop automatically. to stop earlier short press the Palettes button again.

- Single: Short press the Palettes button to perform a single distance measurement each time.
- Position：Top / Mid

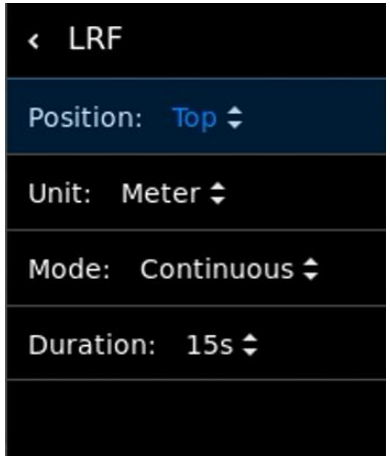

- Unit：Meter / Yard

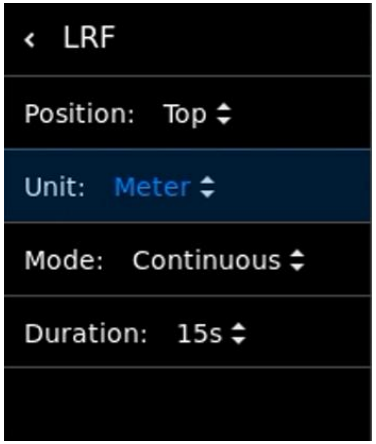

- Mode：Continuous / Single

- Duration：15, 30, 45, 60 sec

16. Ballistic Calculation

Before using this function, please note the following two points:

1. Ensure the rangefinding function is working properly. For detailed instructions on using the rangefinder, refer to the previous section.

2. Ballistic parameters must be set in the ZEN LINK App. The specific steps are as follows:

- Connect the MEGA Series device in the ZEN LINK App. Once connected, tap the Ballistic Calculation icon.

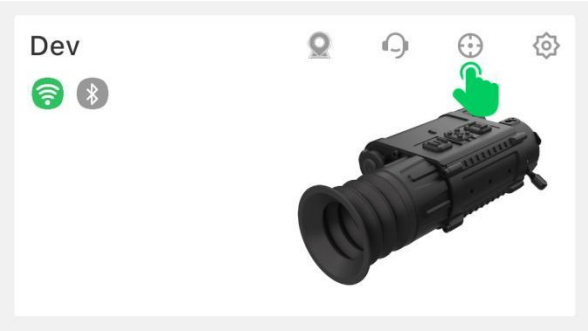

- On this page, select the corresponding Ballistic Profile, enter the parameters, and tap Save after completing the setup.

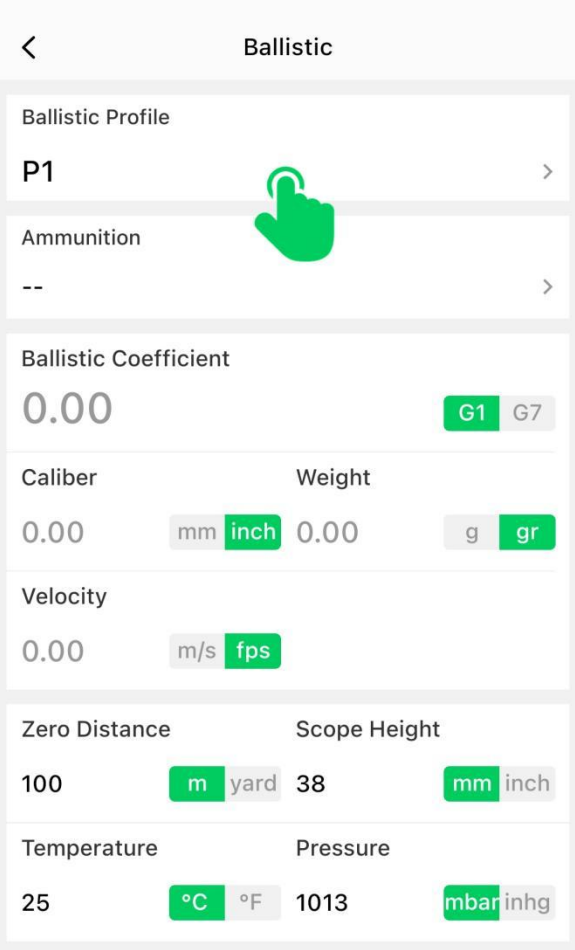

- After saving, the data will be automatically transmitted to and stored in the MEGA Series device. To modify the parameters in the Ballistic Profile, reconnect to the ZEN LINK App and repeat the above steps.

- Open the device's main menu to view or switch Ballistic Profiles in the Ballistic Calculation menu.

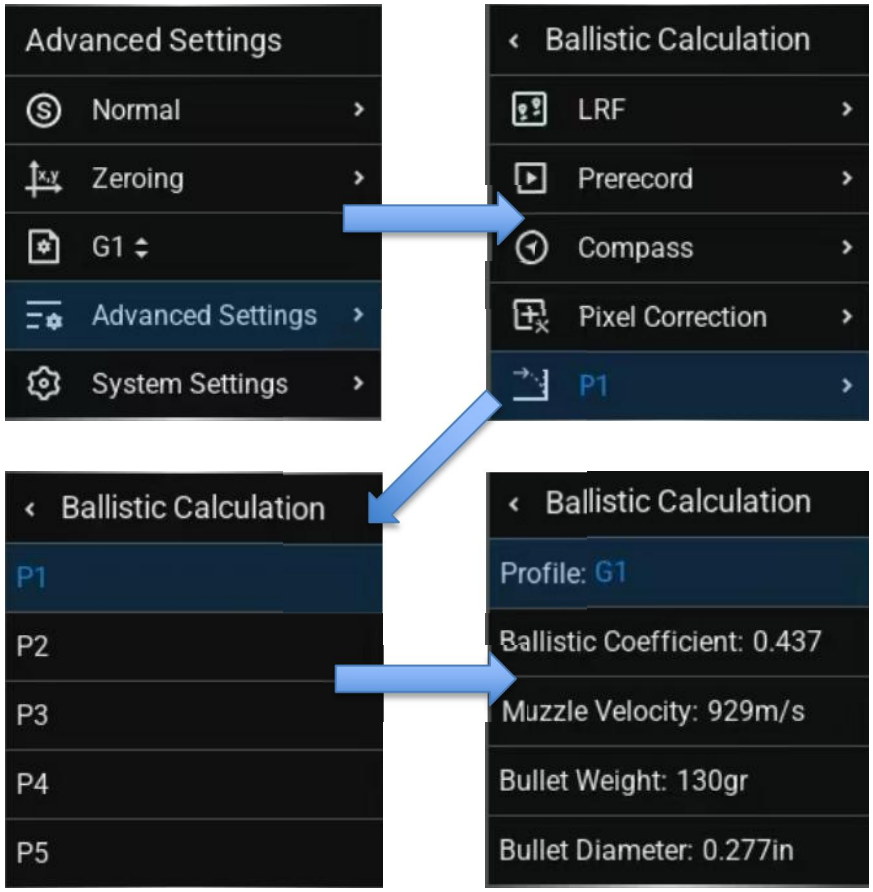

Once the above setup is complete, the Ballistic Calculation function is ready for use. Follow the steps below:

- Aim at a distant target. The function will not work at close range.
- Short press the Palettes button to start rangefinding. After a short moment, the screen will display the calculated ballistic data.
- Adjust the muzzle elevation according to the displayed data to accurately hit the target.
- Adjust the muzzle elevation according to the displayed data to hit the target accurately. For example, if the screen shows "3 MIL", use the reticle on the day scope as a reference and raise the muzzle by 3 MIL.
- Short press the Palettes button again to turn off the rangefinding and ballistic calculation functions.

17. Quick Menu

Press Menu briefly to enter:

- Palettes.
- Scene Mode.
- Screen Brightness (1–15).
- Contrast (1–5).

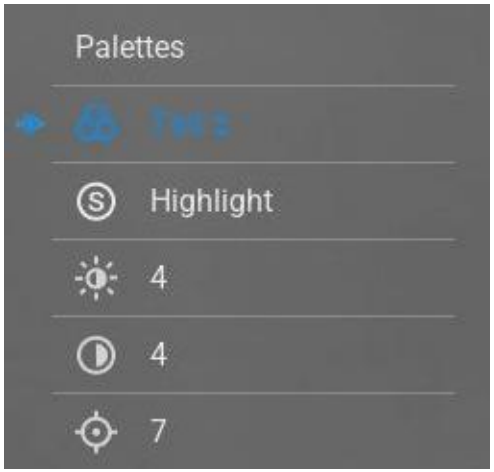

Use Palettes/Capture to navigate, Menu to modify, long press Menu to save and exit.

18. Main Menu

The Main Menu provides full control of all advanced settings. Access it by **long pressing the Menu button** on the home screen. Navigate with the **Palettes/Capture buttons**, short press the Menu button to edit or enter a submenu, and long press the Menu button to save and return to the previous level.

➢ Operation Mode

Switch between four display styles:

Clipon / Monocular / Scope / Helmet

- **Clipon**: Install in front of optic, maintaining zero while extending detection and engagement capability.

  Eyepiece Focus & Parallax Adjustment:

  1. Mount the device securely in front of the day scope.

  2. Look through the day scope and focus on the thermal display interface.

  3. Rotate the rear eyepiece adjustment ring until the display appears sharp and in focus.

  4. Once properly adjusted, the image and reticle are aligned on the same focal plane, eliminating parallax so that minor eye position changes will not affect reticle alignment.

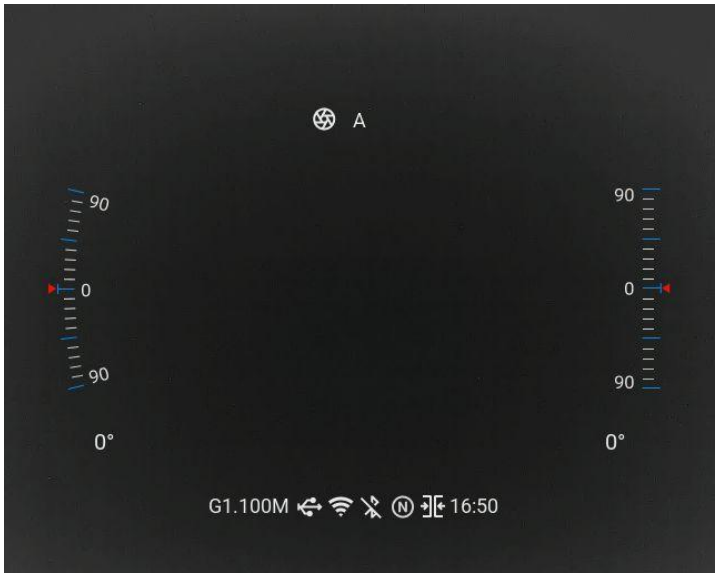

- **Monocular**: Switch to handheld mode to use the MEGA Series device as a portable thermal imager.

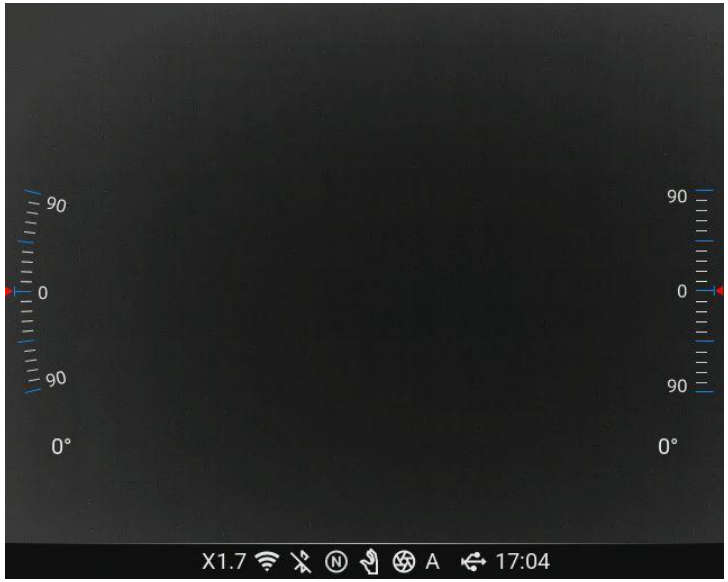

- **Scope**: Accurate thermal aiming for close to mid-range engagements.

- **Helmet**: Support mobility, navigation, and close-range engagements

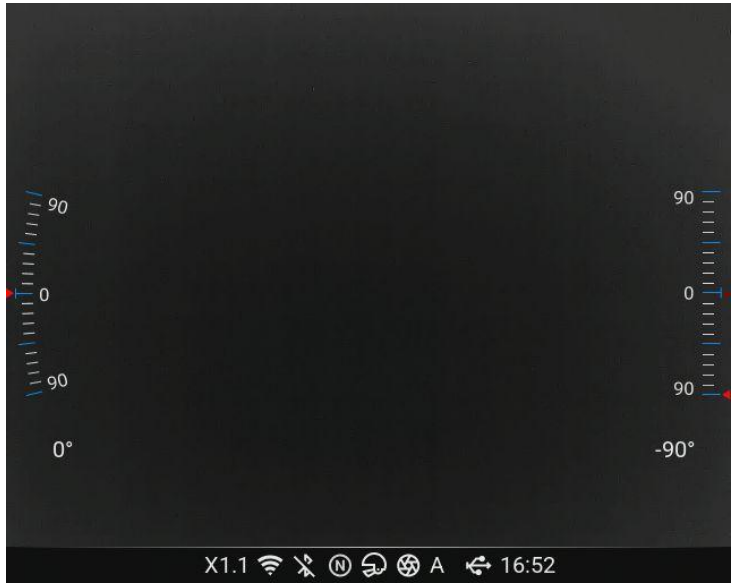

NOTE: Displays SSID on activation. Please check the Wi-Fi name (SSID) in Advanced Settings > Wi-Fi. The default password is 12345678. If forgotten, go to Advanced Settings > Wi-Fi > Reset PIN to reset the password.

➢ Wi-Fi

This option enables or disables Wi-Fi, allowing the device to connect to mobile apps (e.g., ZEN LINK) for remote control, image preview, and firmware updates. When enabled, the device will broadcast its SSID for connection.

Toggle wireless connection for app control and file transfers.

- On / Off.

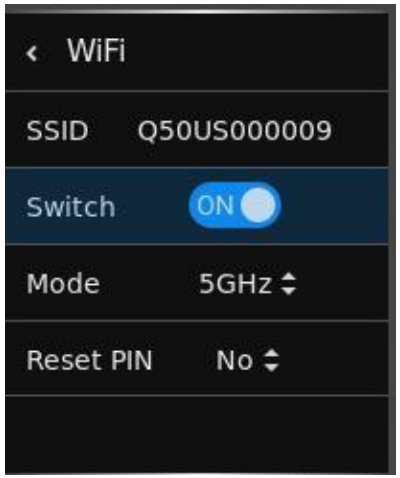

➢ Bluetooth

Bluetooth allows pairing with external accessories such as laser rangefinders or remote controls. Once paired, the device will recognize and show the connection status.

Pair with compatible external devices (e.g. rangefinder).

- On / Off.

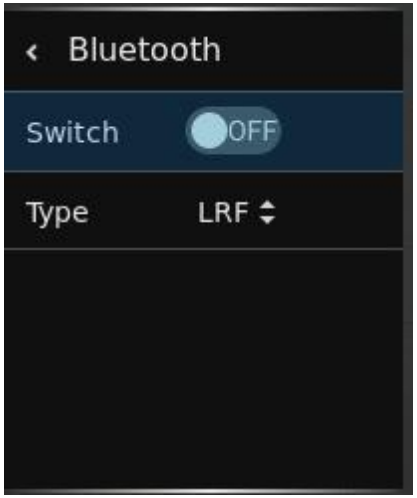

➢ Palettes

Thermal palettes control how the device translates heat differences into visual colors. Users can switch between various false-color schemes for better target visibility under different environmental conditions.

Change thermal display color schemes.

- White Hot / Black Hot / Red Mono / Rainbow / Arctic / Iron Red / Green White / Tint / Sepia / Fulgurite / Cold Green / White Highlight.

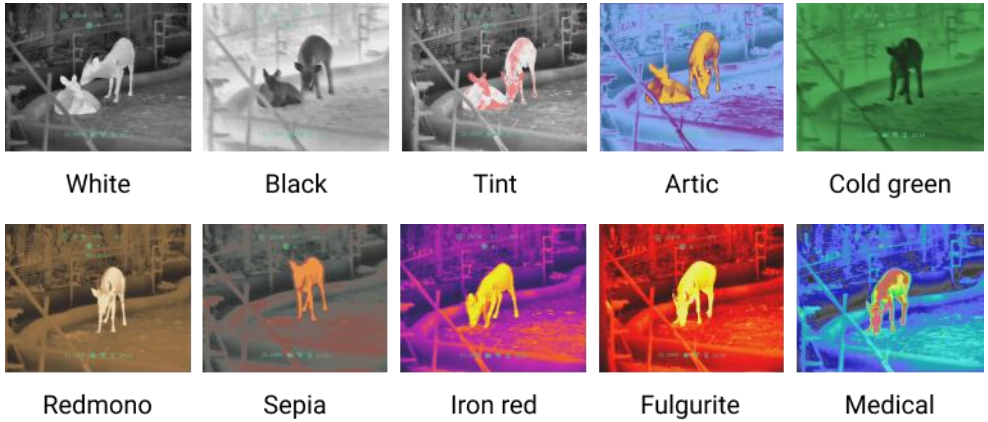

➢ Display Settings

Adjust screen brightness, menu scale, status bar visibility, and location to ensure optimal display readability across lighting environments.

Personalize display preferences.

- Brightness (1–15).

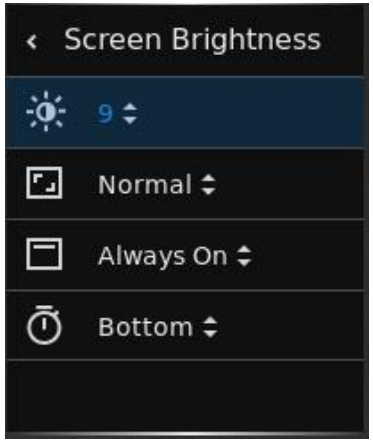

- Menu Size: Normal / Small.

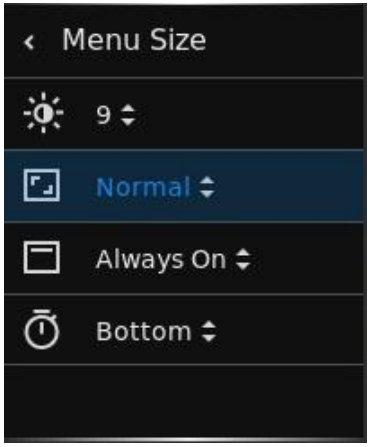

- Status Bar: Auto hide / Always On.

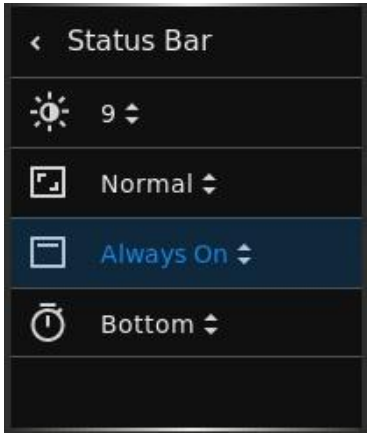

- Countdown Location: Top / Mid.

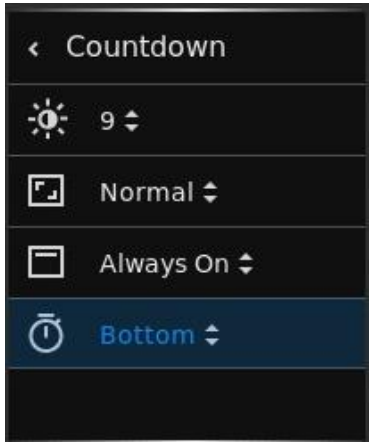

➢ Scene Mode

There are three scene modes that can be switched via the Quick menu. Users can customize the Display Settings for each mode, such as weather, denoise, and contrast, enabling fast and effective transitions between different environments for optimal viewing.

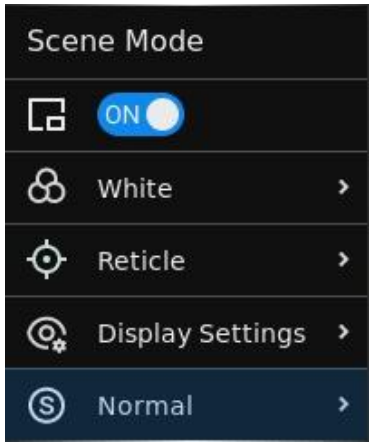

- Three Scene Modes: Normal / Highlight / Enhance.

- Editable parameters: Weather, De-noise, Contrast, Sharpness, Brightness.

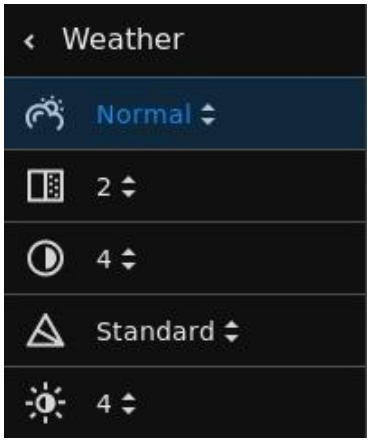

- Favorite: The selected scene mode can be switched via the Quick menu.

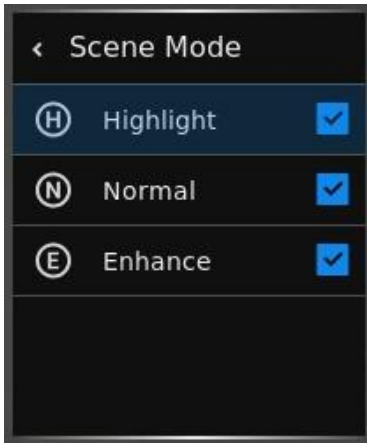

- Auto Highlight: On / Off.

  When this feature is enabled, the device automatically switches to Highlight mode after shooting, making it easier to detect and locate targets while eliminating the hassle of manually switching scene modes.

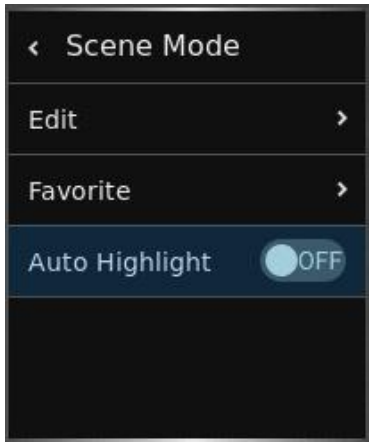

➢ Profile

Quickly switch between different zeroing profiles. Once the device is connected to the ZEN LINK App, rename profiles within the app to make selection easier.

- Profiles G1–G10 can be renamed in the app for easier identification.

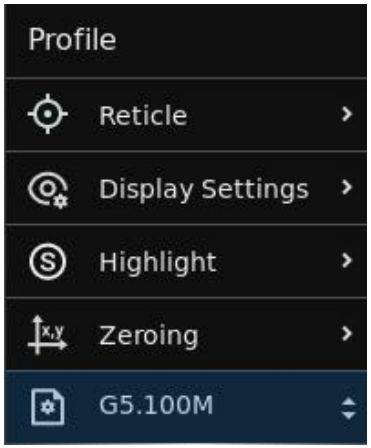

➢ Media

Browse and view stored photos and videos.

- Thumbnail grid, with album categorized by month.

➢ NUC Shutter

Control thermal sensor calibration.

When switched to Auto mode, the status bar displays an icon with the letter A; in Manual mode, it shows M; in External mode, it shows E.

- Auto / Manual / External.

- Auto: The device automatically triggers image calibration at regular intervals without user action.

- Manual: User initiates calibration manually by long pressing the Zoom button.

- External: Close the lens cap and long press the Zoom button to calibrate.

➢ MIC

Enable or disable ambient audio recording.

- On / Off.

- Gain: -5~5.

  Adjust microphone gain level

➢ Menu Sorting

Reorder items in Main Menu.

- Press the Menu button to switch menu items, and use the Up/Down buttons to move positions.

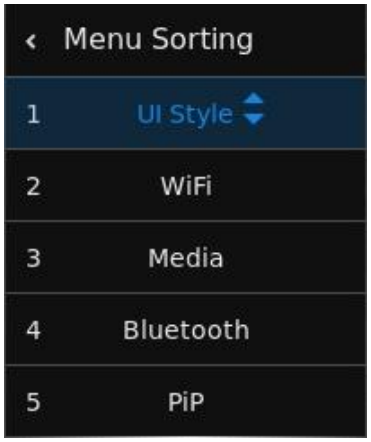

➢ Compass Calibration

Guide to recalibrate electronic compass.

- Requires manual motion in specific directions until green icon appears.

➢ Prerecord

Automatically captures video before and after recoil.

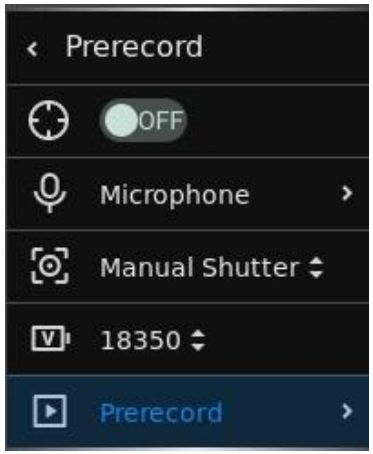

- Sensitivity: Low / Medium / High.
  Adjust the sensitivity of this feature.

- Duration: 10s/15s/20s/25s/30s (before & after).
  Set the time to start recording the video. For example, if set to 15 seconds (before shot), the video will start recording 15 seconds before the shot.

➢ Auto Sleep

When the device's pitch angle exceeds 65 degrees or the roll angle exceeds 45 degrees, it will enter standby mode after the preset period of inactivity.

- Delay: 3 / 5 / 10 min.

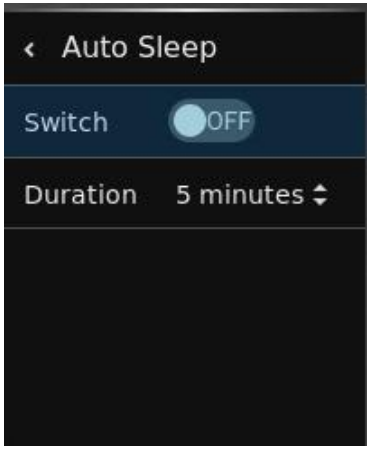

➢ Pixel Correction

Fix defective (hot/stuck) pixels manually.

- Press and hold the menu button to enter the main menu.

- Select the Pixel Correction function to enter the Pixel Correction screen and the coordinate position of the reticle (X axis, Y axis) will be displayed in the center of the screen.

- Find the bad pixels in the screen.

- Press the menu button to toggle the x and y axes and press the up and down buttons to adjust the position of the x and y axes. Press the menu button to calibrate the bad pixels.

- Repeat the above operations to continue selecting bad pixels.

- When the calibration is done, press and hold the menu button to exit the pixel correction.

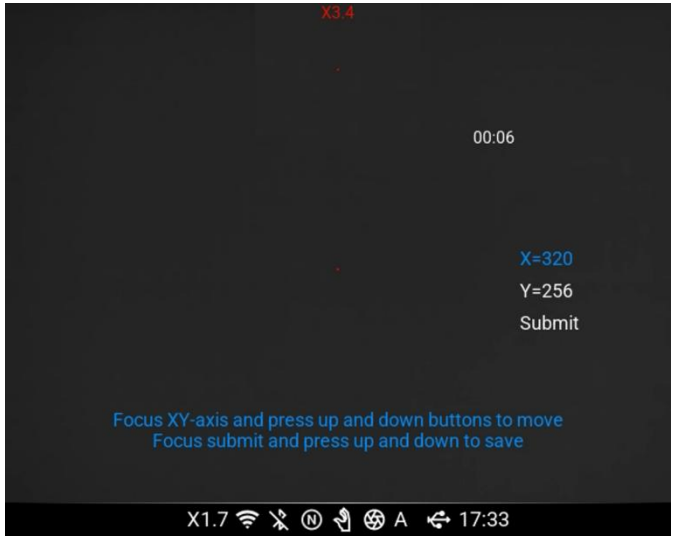

➢ Time/Date

Manually set time and date.

- Year, month, day, hour, minute, and second can be set individually.
- Used to display time in the status bar.
- Required for accurate file naming.

➢ Language

Choose device interface language.

- English / Deutsch / Italiano / Čeština / Magyar / Español / Français

➢ Reset Settings

Restore factory defaults (non-destructive).

- Confirmation required.

➢ Erase Media

Delete all saved photos and videos from internal storage.

- Confirmation required.

➢ About

View firmware version, serial number, and hardware ID.

19. Connecting to ZENLINK App

App Installation:

iOS

Android

- Download **ZENLINK** from App Store (iOS) or Google Play (Android).

Connecting:

1. Turn on device Wi-Fi (Main Menu > Wi-Fi > On).

2. Note SSID displayed in Main Menu > Advanced Settings > Wi-Fi.

3. On your phone, go to WLAN settings and connect to the same SSID.

   Default password: **12345678**

4. Open ZEN LINK App → Tap connected device → View real-time image or access media.

20. Firmware Upgrade

1. Connect mobile device to the unit via Wi-Fi.
2. Open **ZENLINK App** → Tap Settings ⚙.

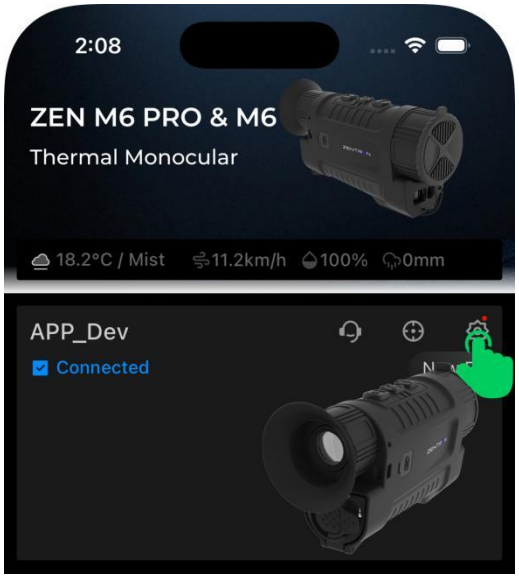

3. Select **Firmware update** → Tap **Download Now.**

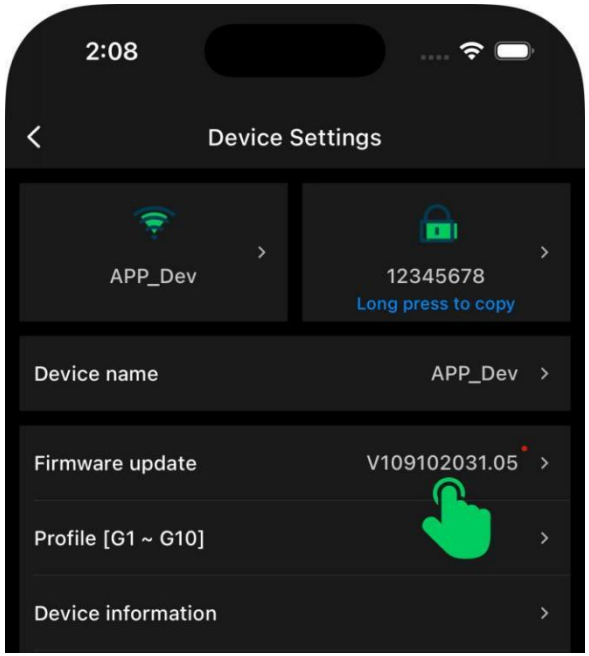

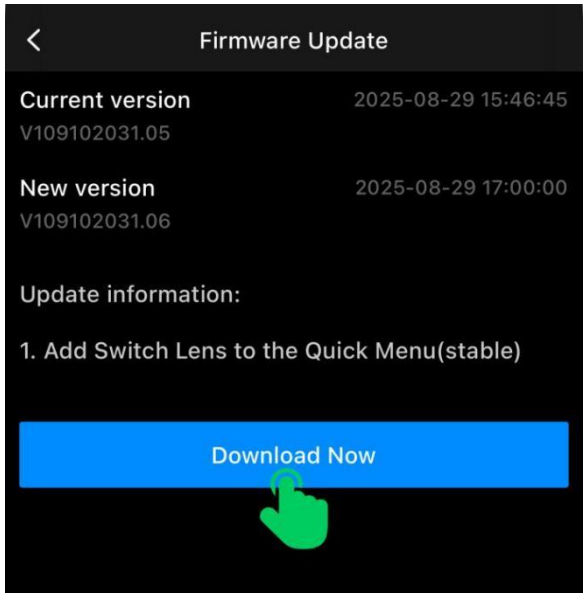

4. Follow prompts to complete installation.

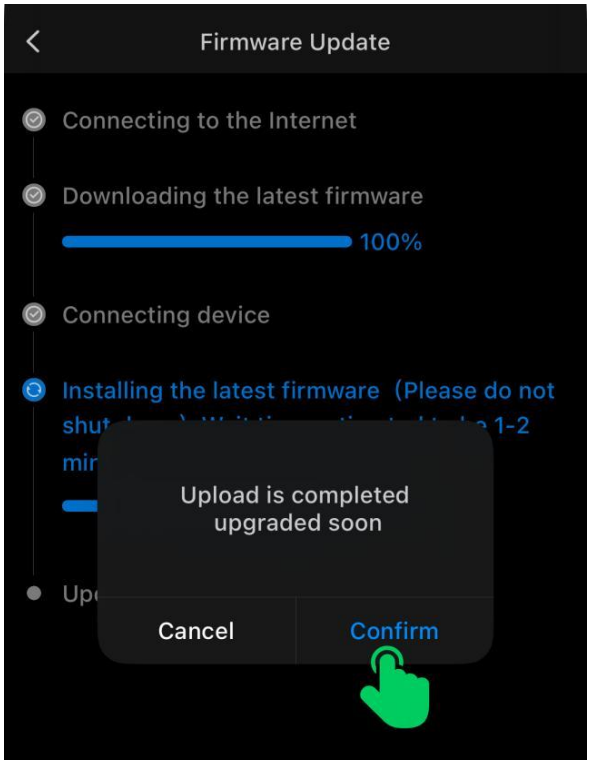

5. Device will automatically restart and apply updates.

Important: Do not disconnect during upgrade. Ensure battery >50% or connect external power.

21. File Transfer to PC

When connected via USB-C cable:

1. Power on the device.
2. Connect to a PC via cable.
3. Device will appear as a USB drive. Double-click to open and view files.
4. Open folders by date to view:
    - The device stores captured photos and videos in its USB drive.
    - Users can copy them to their computer.
    - Photos (.jpg).
    - Videos (.mp4).

The naming conventions for photos and videos are:

- zentron_image_YYYY_MM_DD_HH_mm_ss.jpg.
- zentron_video_YYYY_MM_DD_HH_mm_ss_auto.mp4.
- zentron_video_YYYY_MM_DD_HH_mm_ss_manual.mp4.
- auto.mp4 is the video automatically recorded by the Prerecord function.

- manual.mp4 is the manually recorded video.
- YYYY_MM_DD_HH_mm_ss represents year, month, day, hour, minute, and second.

22. Maintenance & Cleaning

- **Lens:** Use provided microfiber cloth. Do not use alcohol or coarse material.
- **Body:** Wipe with soft damp cloth. Avoid solvents.
- **Storage:** Keep dry, store in provided bag.
- **Charging Port:** Avoid dust buildup.
- **Battery:** Charge every 3 months during long-term storage. Avoid full depletion.

23. Troubleshooting (FAQ)

Issue	Possible Cause / Solution
Device won't turn on	Check battery orientation / charge level
Wi-Fi not visible	Ensure Wi-Fi is enabled in main menu
App fails to connect	Forget Wi-Fi, reconnect / Restart device
Image is blurry	Adjust lens focus / Eyepiece diopter
Reticle is misaligned	Perform zeroing again / Reset profile
Video not recording	Ensure sufficient storage space
Battery drains fast	Enable Auto Sleep, disable Wi-Fi and Bluetooth

24. Legal & Compliance

FCC ID: 2BVLG-MEGA-CQ25R

FCC Statement:

This equipment has been tested and found to comply with the limits for a Class B digital device, pursuant to part 15 of the FCC Rules. These limits are designed to provide reasonable protection against harmful interference in a residential installation. This equipment generates, uses and can radiate radio frequency energy and, if not installed and used in accordance with the instructions, may cause harmful interference to radio communications. However, there is no guarantee that interference will not occur in a particular installation. If this equipment does cause harmful interference

to radio or television reception, which can be determined by turning the equipment off and on, the user is encouraged to try to correct the interference by one or more of the following measures:

Reorient or relocate the receiving antenna.

Increase the separation between the equipment and receiver.

Connect the equipment into an outlet on a circuit different from that to which the receiver is connected.

Consult the dealer or an experienced radio/TV technician for help.

Caution: Any changes or modifications to this device not explicitly approved by manufacturer could void your authority to operate this equipment.

This device complies with part 15 of the FCC Rules. Operation is subject to the following two conditions: (1) This device may not cause harmful interference, and (2) this device must accept any interference received, including interference that may cause undesired operation.

RF Exposure Information

The device has been evaluated to meet general RF exposure requirement.

The device can be used in portable exposure condition, compliance with exposure requirements.

This equipment should be installed and operated with minimum distance 0 mm between the radiator & your body.

25. Caution

Use of controls or adjustments or performance of procedures other than those specified herein may result in hazardous radiation exposure.

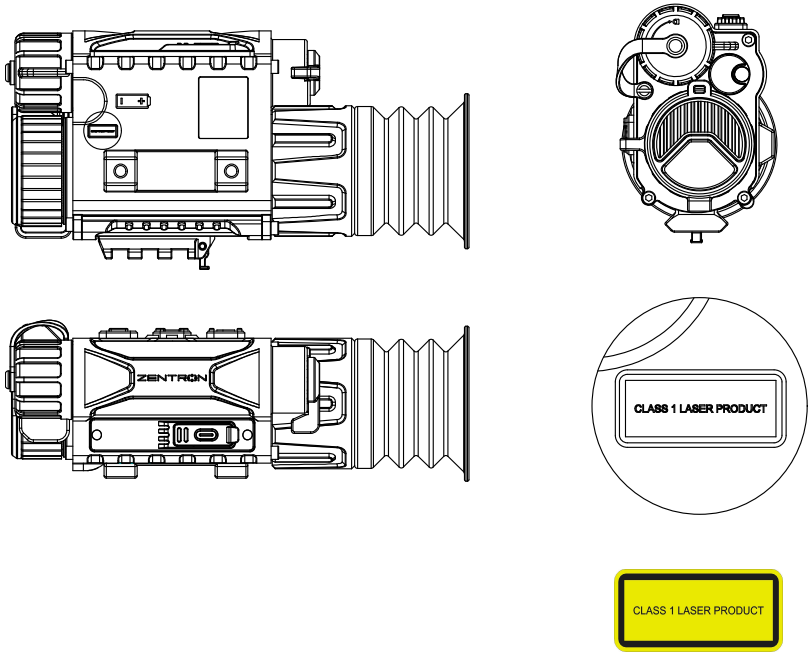

1. Laser safety levels are classified according to IEC 60825-1: 2014.
2. The laser module information is as follows :

- Wavelength: 905nm
- Maximum single pulse energy: 0
- Laser safety level：Class 1
- Pulse width：0
- Repetition frequency：1-5hz

Note：Semiconductor laser, without Maximum single pulse energy and Pulse width parameters.

26. Contact & Support

For technical support, warranty service, or general inquiries:

- Website: zentronoutdoor.com
- Email: info@zentronoutdoor.com

Users can also submit feedback and contact our agents through our ZENLINK app.

Step 1:
Connect device to the ZENLINK app, then navigate to the "About" page. Fin d the submenu "Feedback" under Support.

Step 2:

Tap on "Feedback" to report any issues encountered or to share valuable experience using our products. Our team is here to help and will respond promptly.

At Zentron, we value your experience. You're welcome to share any feedback regarding product usage, technical issues, or suggestions for improvement. Our professional technical support team is committed to responding within 24 hours.

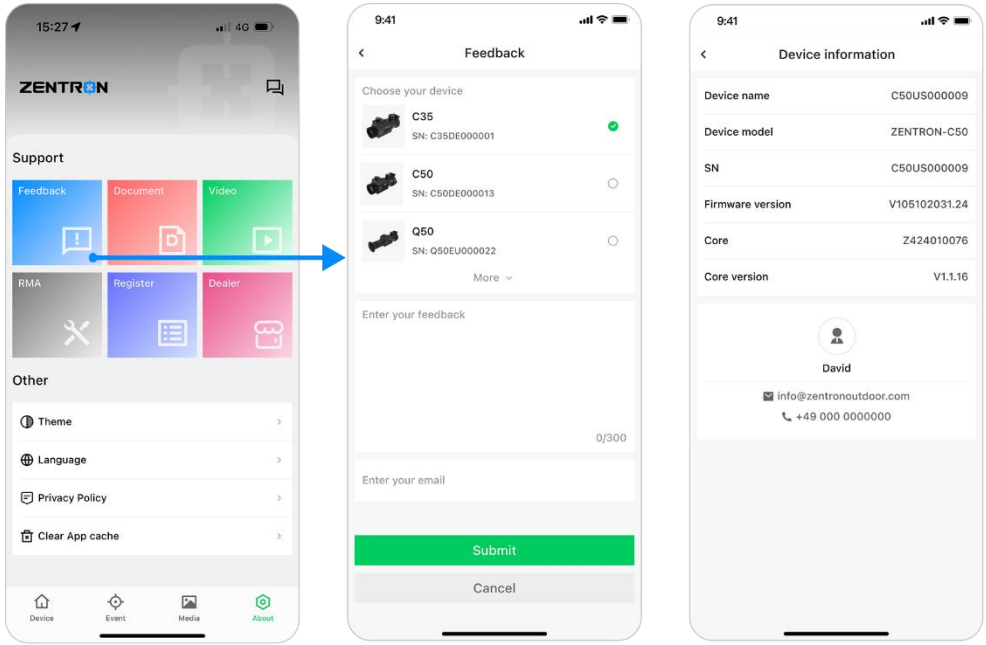

Step 1 Step 2

zentron global

zentron_global

ZENTRON

ZENTRON

info@zentronoutdoor.com

zentronoutdoor.com