QXX

Motorcycle Helmet
Bluetooth Intercom Headset Manual

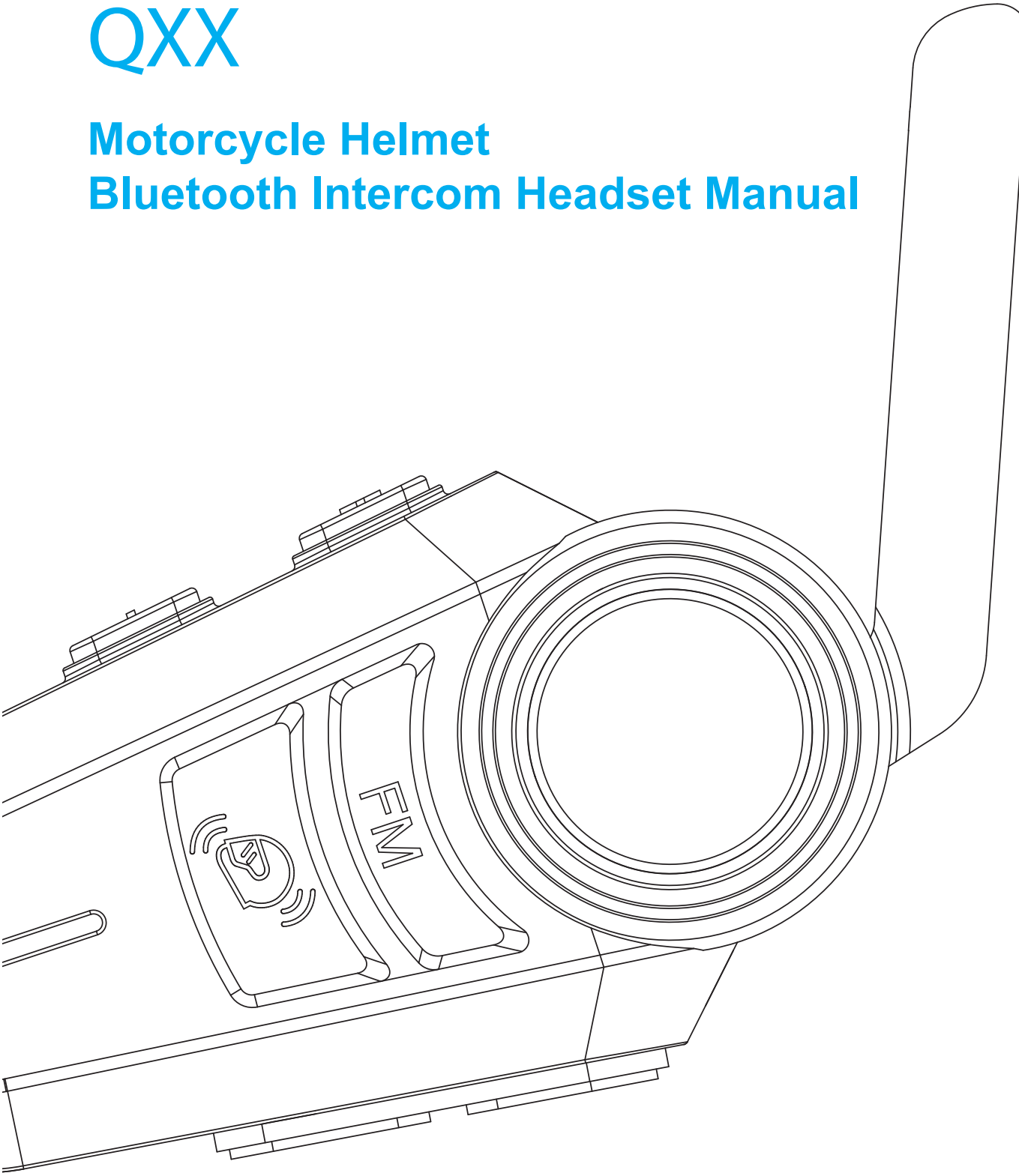

Ulinkal

Function Introduction

- Bluetooth 5.1
- Intelligent noise reduction system
- Hi-Fi high fidelity sound effect
- Windproof and noise reduction microphone
- Bluetooth fast pairing
- Mobile phone priority
- Waterproof grade: IP67
- The maximum effective intercom distance of 2 devices is 1000 meters
- Support the connection of 2-4 Q4X devices, and the best intercom distance of 4 people is 2500meters
- Hands-free calls (Can be set up)
- Ultra clear FM radio
- Music
- GPS navigation
- Voice prompt tone
- Voice assistant
- Bluetooth compatible with most devices
- Battery reminder
- OVP intelligent charging protection
- Type-C quick charge
- Type-C earphone
- Easy to use and operate
- Upgradeable

High standard composite diaphragm combined with perfect cavity design to achieve ultra-thin and high-definition speakers, so as to ensure excellent audio fidelity; The precise structure design of the original windbreak noise reduction microphone and the advanced noise reduction algorithm make the sound quality of the call clearer. The auto answer function can be set. It also comes with a 1000mAh battery that provides about 30 hours of music or 24 hours of intercom time for settings and about 300 hours of standby time. Suitable for most full helmets, half helmets, uncovered helmets, off-road helmets, etc.

Product Diagram

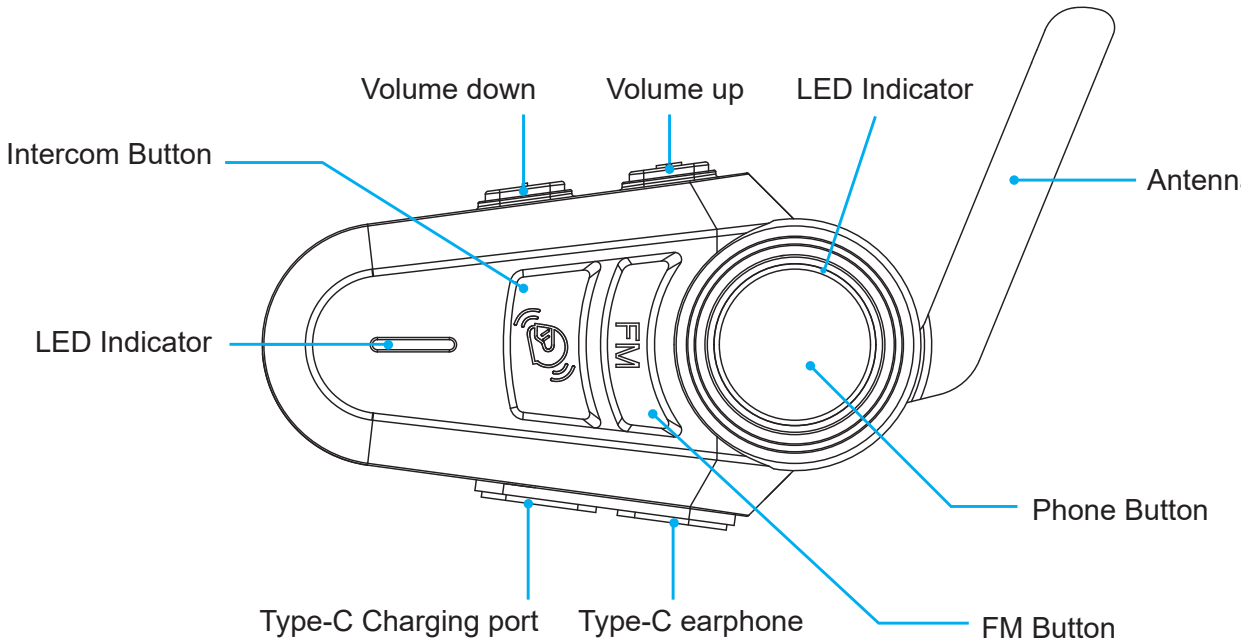

Tips: This picture is for reference only. If the physical appearance is different from the picture, please refer to the physical appearance

Packing List

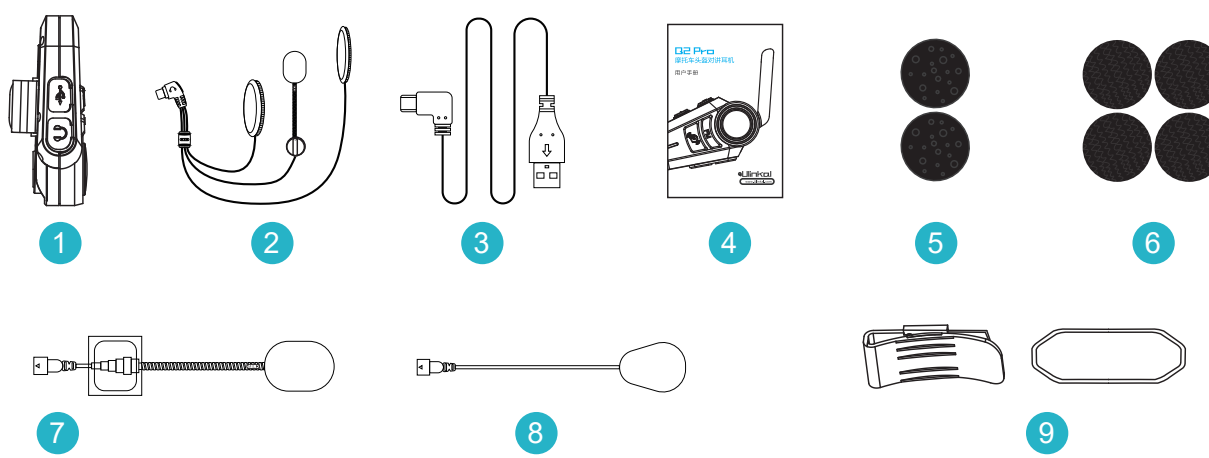

1. QXX series devices
2. 40mm HD slim headset * 1 set
3. Charging cable
4. Manual
5. Height adjusting sponge *2PCS
6. Velcro with a hairy surface*4PCS
7. Hard microphone * 1PCS
8. Soft microphone * 1PCS
9. Installation clip * 1 set

Installation

1 Clip the clip directly on the left side of the helmet or tear the sticker behind the clip and stick it on the left side of the helmet in the direction of the arrow on the clip

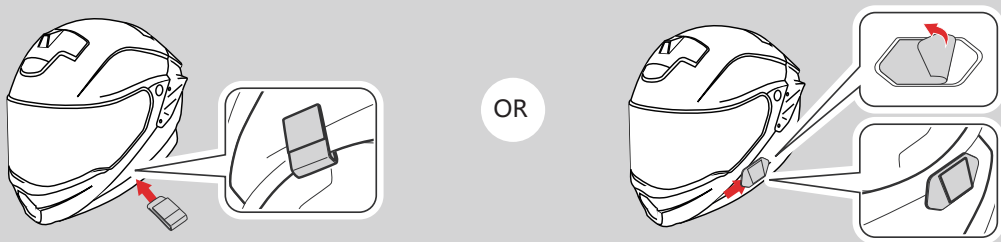

2 Face the front of the interphone to the outside, and push the clip down along the slot at the back of the interphone

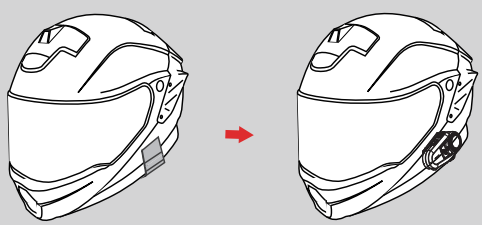

3 Tear off the white sticker on the label and stick the label on the left side of the helmet

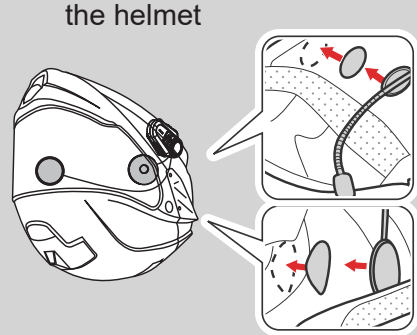

4 Put the extra wire of the headset around the helmet

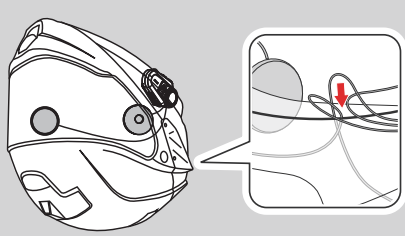

5 Turn on the antenna to the maximum

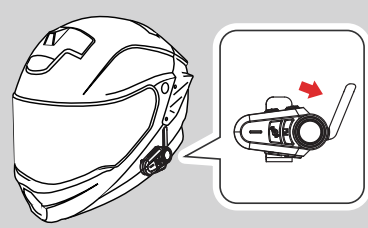

Mobile Phone Operations

Basic Operation Diagram

Single-tap | Double-tap | Long-press for 1s | Long-press for 3s | Simultaneously press for 5s

Operating Instructions (Please charge it before using)

Power ON / OFF

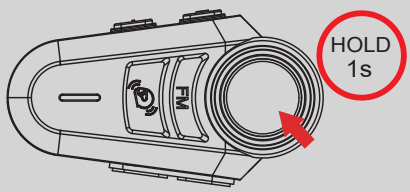

Power ON
Standby

"Welcome Ulinkal"
Blue light flashes slowly

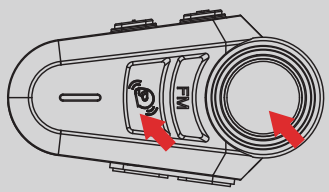

Power OFF
Tap the <Phone Button>and
< Intercom Buttons> simultaneously.

Battery Level

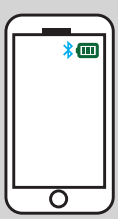

OR

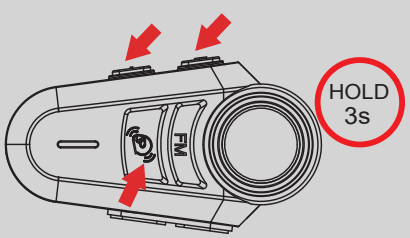

"High"
"Medium"
"Low Battery"

Low Battery Indication

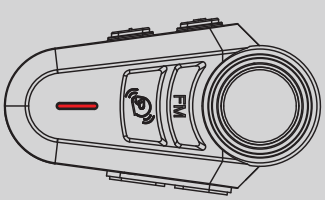

Red light quickly flashes twice
"Low Battery"

Charging Indication

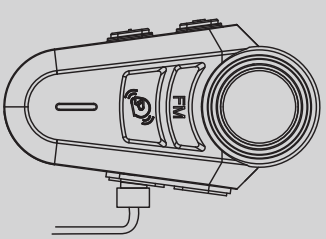

Charging — Red light always on
Full — Red light OFF

Restore Default Settings

Volume control

When intercom,mobile phone, music and FM are used separately

When using FM+ intercom at the same time

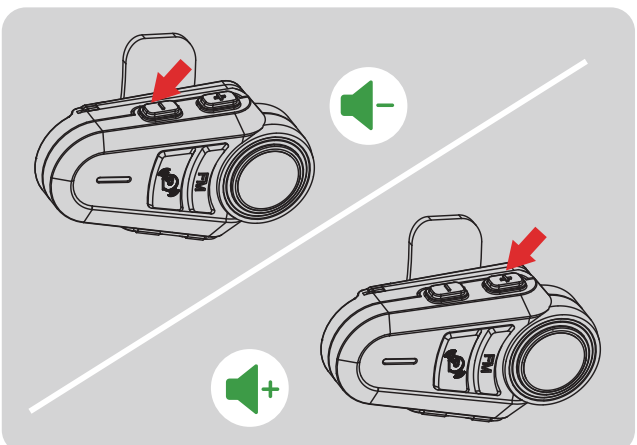

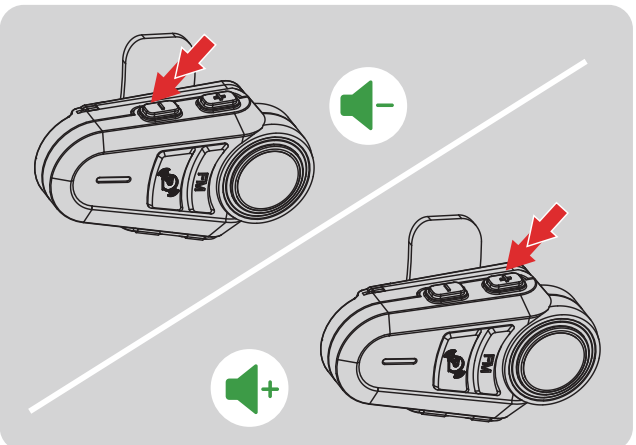

Intercom Pairing

Q2 * series device pairing method

（1) In standby mode, press and hold the device 1 and device 2<intercom button> for 5 seconds, and the red and blue lights of device 1 and device 2 will flash alternately, "Intercom Pairing".

（2）Start searching and automatically pair.

（3）Paired successfully. The blue light flashes slowly, "Pairing Successful".

（4）Connect successfully and start intercom. "Intercom Connected".

Q4 * series device pairing method

Step 1: Pair the Q4 * series devices of the two parties

（1) In standby mode, press and hold the device 1<intercom button>for 5 seconds, press and hold

the device 2<intercom button>+<volume decrease button for 5 seconds, and the red and blue lights of device 1 and device 2 will flash alternately, "Intercom Pairing".

（2）Start searching and automatically pair.

（3）Paired successfully. The blue light flashes slowly, "Pairing Successful".

（4）Connect successfully and start intercom. "Intercom Connected".

Note: If you only need to pair two Q4 * series devices, you only need to complete step 1, without further steps.

Step 2: The third-party Q4X series equipment is paired using the device 2 intercom button to pair the device 3 equipment

In standby mode, long press the device 2<intercom button> for 5 seconds, meanwhile long press the device 3 <intercom button>+<volume decrease button> for 5 seconds to enter the pairing state - start searching and automatically pair—— Paired successfully.

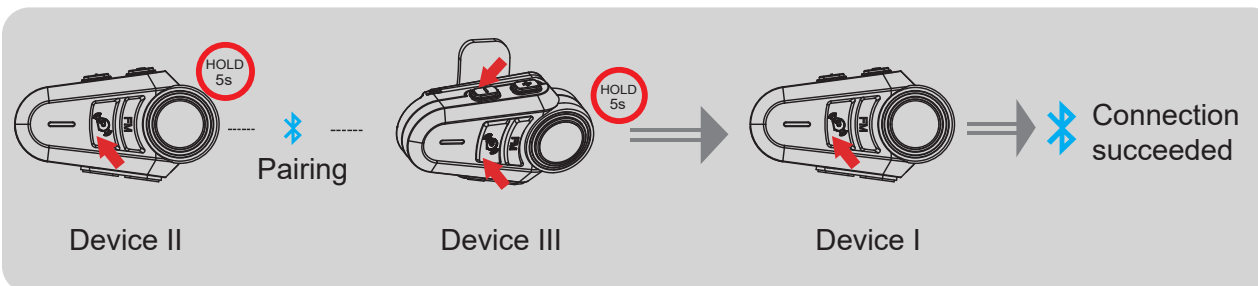

Then tap the<intercom button>on the device 1 to enter the intercom connection
—— Connect successfully and start intercom. "Intercom Connected".

Step 3: Multi-party Q4X series device pairing Use the device three intercom buttons to pair the device four pairs

In standby mode, long press the device 3<intercom button> for 5 seconds, meanwhile long press the device 4<intercom button>+<volume down button> for 5 seconds to enter the pairing state - start searching and automatically pair—— Paired successfully. The blue light flashes synchronously "Pairing Successful".

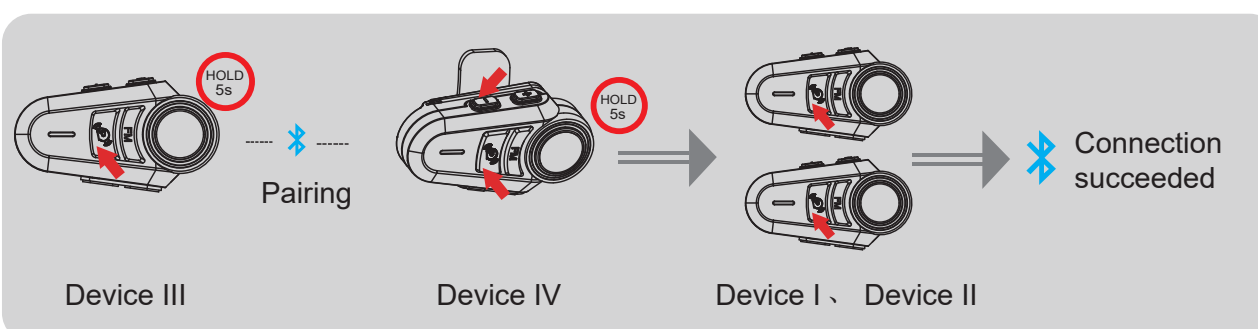

Tap the intercom button of device 1 and device 2 to enter the intercom connection
—— Connect successfully and start intercom. "Intercom Connected".

Intercom connection (take device 2 as an example)

To connect device 3, tap device 2<intercom button>.
To connect device 1, tap device 2<intercom button>+<volume down button>.

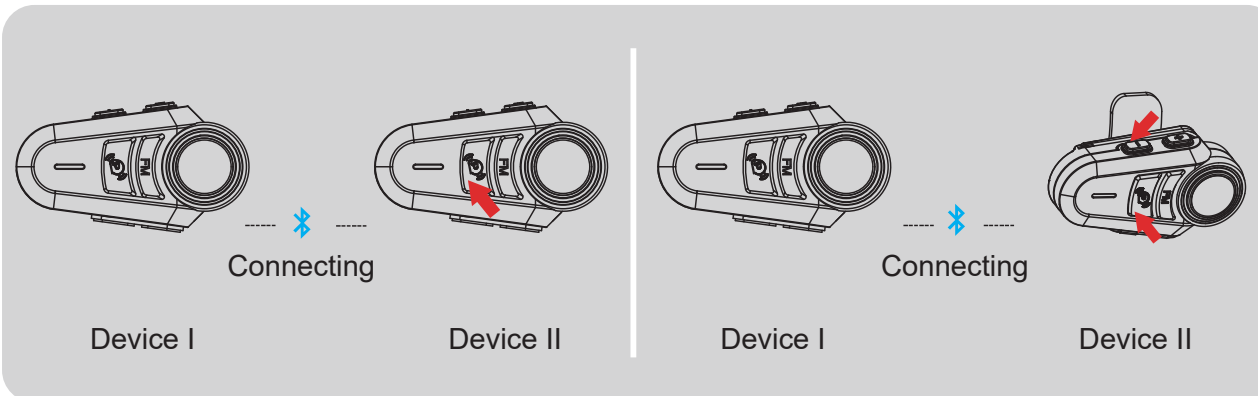

Intercom disconnection

Press and hold 1S<intercom button>or<intercom button>+<volume decrease button>.

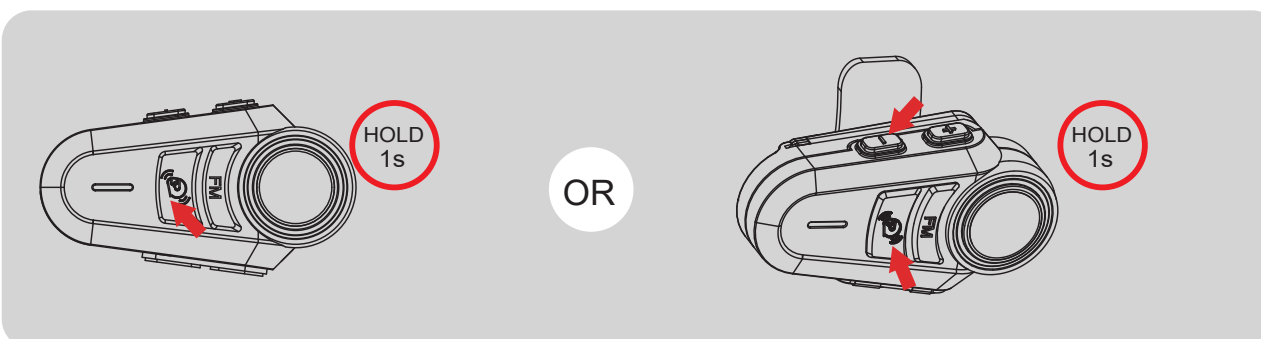

Paired headset or Bluetooth interphone of other brands

Active connection mode

（1） At the same time, press and hold the<intercom button>and<plus button>for 5 seconds, and the red and blue lights will flash alternately; “Intercom Pairing”.
（2） Other devices enter Bluetooth search mode.
（3） Tap<intercom button>Connect, "Intercom Search".
（4） "Intercom Pairing Successful".

Passive connection mode

（1） At the same time, press and hold the<Intercom button>and<Minus button>for 5 seconds, and the red and blue lights will flash alternately; “Intercom Pairing”.
（2） Other devices enter Bluetooth search mode.
（3） Tap<intercom button>Connect, "Intercom Search".
（4） "Intercom Pairing Successful".

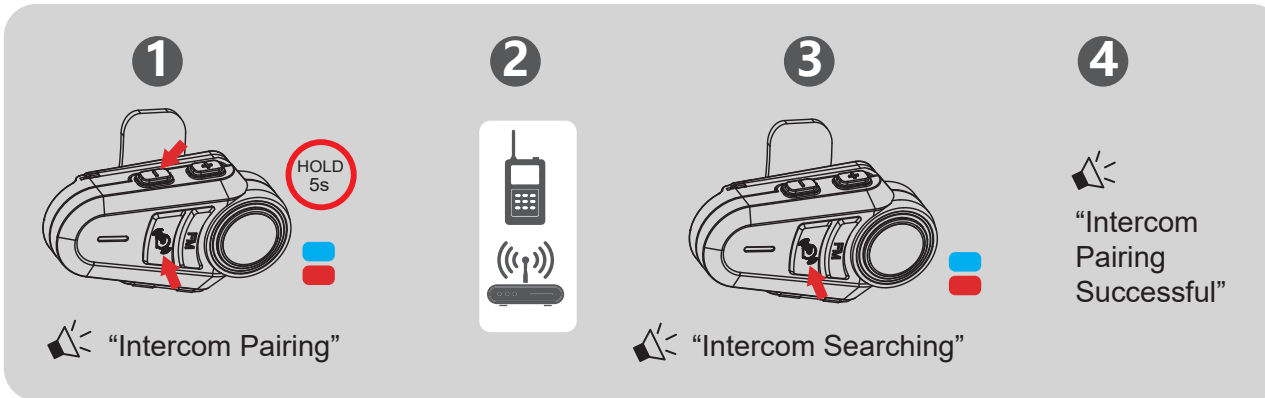

Note: This function does not guarantee compatibility with all Bluetooth headsets or Bluetooth interphones on the market.

Bluetooth Pairing

Mobile phone paring

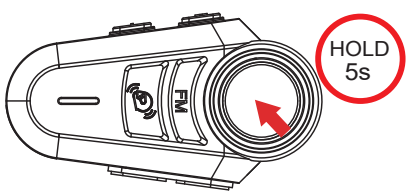

1

In standby mode, press and hold the<Phone button>5 seconds to enter the pairing mode. (If the phone is not connected, the pairing mode will exit after 2 minutes).

The red and blue lights flash alternately.

"Phone Pairing"

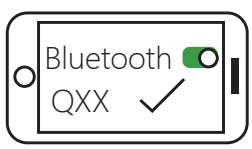

2 Open the mobile phone Bluetooth and tap the device.

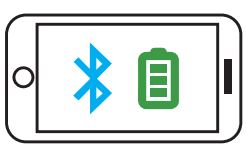

3 Connection succeeded

The current power is displayed on the Bluetooth icon of the mobile phone. (The mobile phone needs to support HFP).

Blue light slow double flashing

"Pairing Successfu,Connected"

Bluetooth and mobile phone back connection

Automatic connection after startup

OR

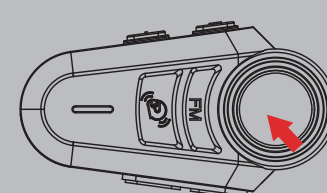

Mobile Phone Control

Answer the phone

Automatically answer when there is no operation within 6 seconds

OR

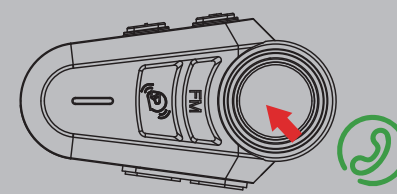

Automatic call answering Settings

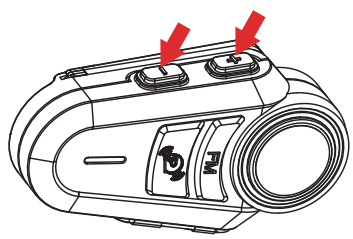

HOLD 2s

“ Auto answer on ”
“ Auto answer off ”

Answer the phone

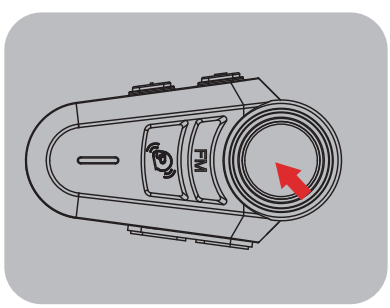

Redial the last number

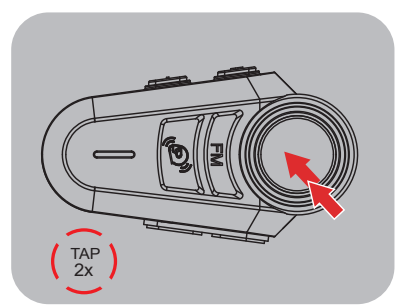

Hang up

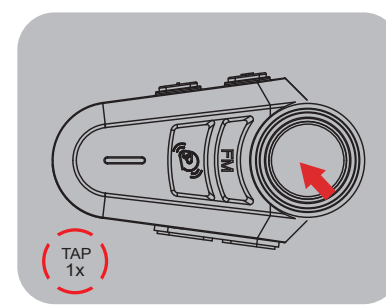

Mobile phone priority

Receiving a call while listening to music/FM/intercom

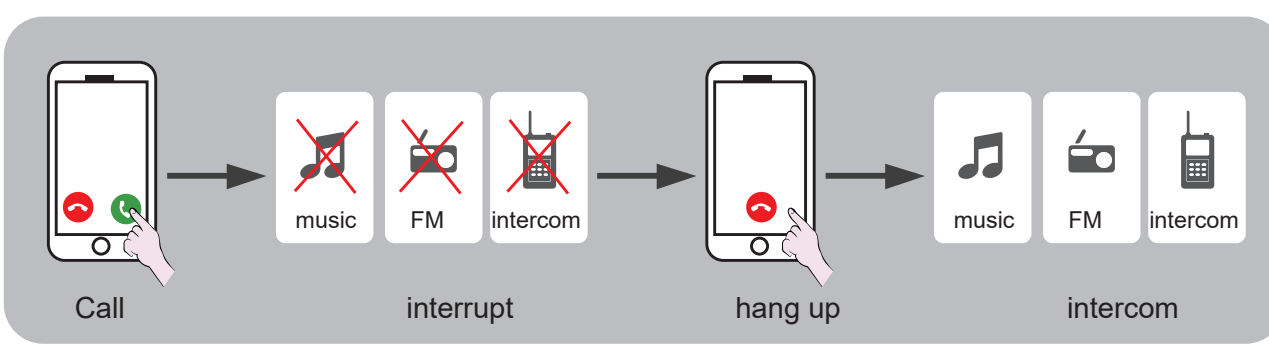

Voice Assistant

Phone must support the voice assistant (Google assistant & Siri)

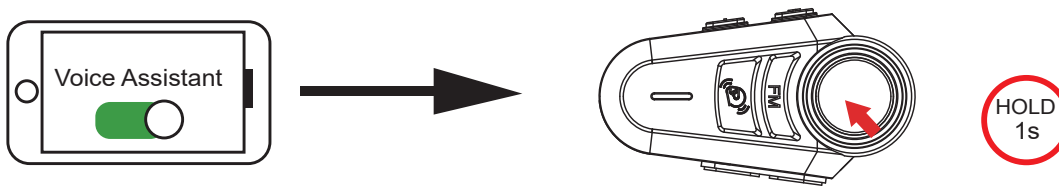

Turn on the voice assistant

Press the “Power” button for 1s

Music Control

Play/Pause

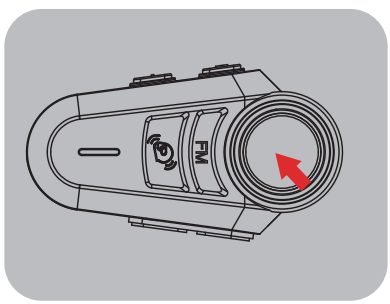

Song switching

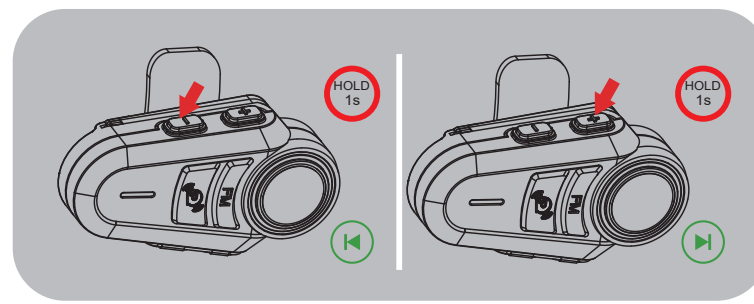

FM

FM ON/OFF

76~108MHz Intercom and radio can be used simultaneously

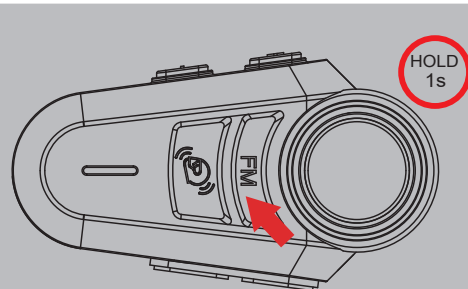

Press and hold the<FM button>
for 1 second to open FM
"FM Radio"

Press and hold the<FM button>
1 second to turn off FM
"FM Radio Off"

Save channels (up to 6)

Tap<FM>to save the current channel, "number".
When the radio is working, tap the<FM button>to save the current channel. At the same time, there will be a prompt tone to save the number of channels.

A total of 6 channels can be saved, and they will be overwritten circularly after being saved.
Double-tap the<FM button>Delete to save the current channel.

Switch channel

Press and hold the<Volume+button>,<Volume - button>to switch channels.

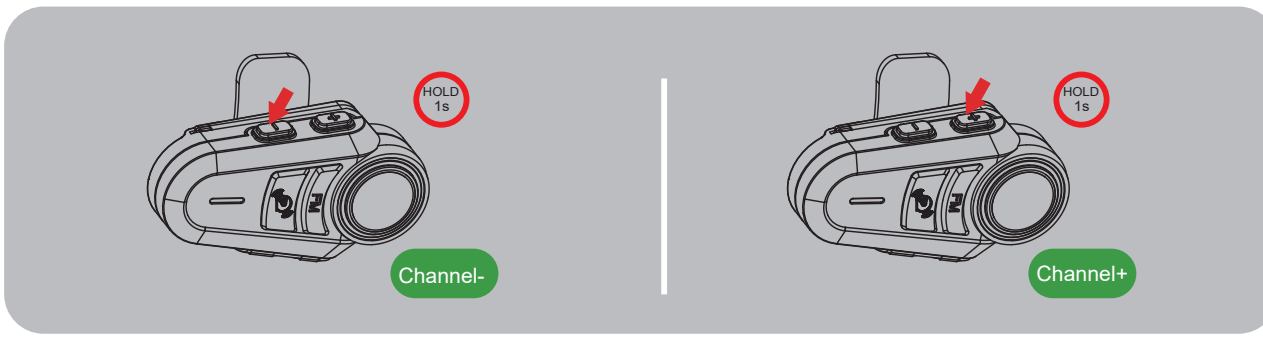

Wired connection of interphone (optional, Q2 and Q4 are not supported)

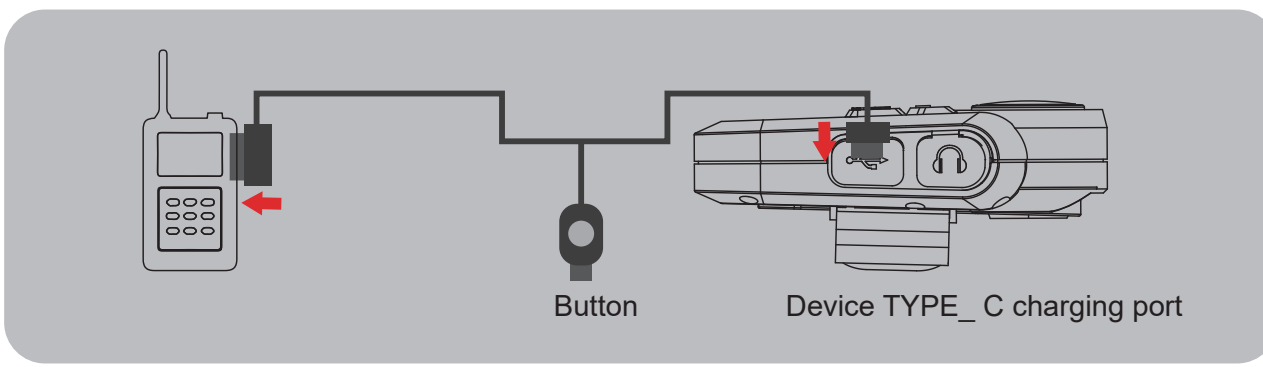

Product Characteristics

- Bluetooth Version: Bluetooth 5.1
- Technical Support: Intelligent noise reduction system,Hi-Fisound
- Intercom communication distance (Q2 *): about 1000 meters
- Intercom communication distance (4 sets of Q4 *): about 2500 meters
- Temperature:-10~55℃
- Battery Parameter:3.7V/900mAh

- Power Adapter: DC 5V/1A
- Charging Time: Approximately 2 hours
- Intercom working time: Approximately 26 hours
- Music working time: Approximately 20 hours
- Standby time: Over 300 hours
- Charging Interface: Type-C USB

Warning

1.Verify compliance with all local laws and regulations regarding the use of in-helmet speakers when operating a motor vehicle.
2.In the operation of motor vehicles, in order to ensure driving safety, do not operate mobile phones.
3. Using this product at a high volume for a long time will cause damage to your hearing. Please keep the volume appropriate.

Attention

1. Installing equipment on the helmet is a modification of the helmet which may cause the helmet's warranty to fail or hinder the helmet's function. So please fully understand the facts when using with the helmet. If you can't accept please return the product.
2.Before driving, please make sure that the product is firmly and correctly mounted on the helmet. If the product falls of during driving, may cause injury oraccident.
3. To ensure riding safety, please use this product carefully while on the road to avoid serious accident or injury.
4. The product contains 3.7V/1000mAh battery. The battery capacity will chance with the temperature When the battery is used at low temperature or below 0℃ the battery life of the product may attenuate to different degrees.
5. If the electronic function fails, please power off and try again.

Precautions for battery use

1.Please don't put the discarded batteries together with the general household garbage. In areas with relevant laws &regulations on recycling and disposal of waste batteries, please follow the relevant regulations of the local administrative department to make a contribution to environmental protection.

2. Don't remove, squeeze, heat or bum the battery inside the product. It is strictly prohibited 1o use sharp objects, screwdrivers or other devices to puncture or pry the battery. The above operation may cause the battery to catch fire or burn.

3. The battery's electrolyte enters the eye and can lead to blindness. If you splash the battery electrolyte into your eyes, do not rub your eyes with your hands. Rinse thoroughly with water immediately and contact the hospital for treatment. If the battery electrolyte sticks to the skin and clothes, wash them immediately with soapy water and clean water and seek medical attention if necessary.

4.When charging, since the battery temperature will rise, please don't put the battery and flammable objects together to avoid fire.

Environmental friendliness

Toxic and harmful substances or elements and content table

Toxic or harmful substances or elements	Part name		
	Host	Battery	Accessories
Plumbum (Pb)	×	×	×
Meroury (Hg)	○	○	○
Cadmium (Cd)	○	○	○
Chromium VI (Cr^{6+})	○	○	○
Polybrominalnd Biphenyls（PBB）	○	○	○
Polybrominaled diphenyl ethers (PBDE)	○	○	○

RF COMPLIANCE NOTICE
FCC Requirements:
FCC ID：2BVNX-K1608

FCC Caution：
This device complies with part 15 of the FCC Rules. Operation is subject to the following two conditions:(1)this device may not cause harmful interference, and (2)this device must accept any interference received, including interference that may cause undesired operation.

Any Changes or modifications not expressly approved by the party responsible for compliance could void the user's authority to operate the equipment.
NOTE: This equipment has been tested and found to comply with the limits for a Class B digital device, pursuant to part 15 of the FCC Rules. These limits are designed to provide reasonable protection against harmful interference in a residential installation. This equipment generates, uses and can radiate radio frequency energy and, if not installed and used in accordance with the instructions, may cause harmful interference to radio communications. However, there is no guarantee that interference will not occur in a particular installation. If this equipment does cause harmful interference to radio or television reception, which can be determined by turning the equipment off and on, the user is encouraged to try to correct the interference by one or more of the following measures:

- Reorient or relocate the receiving antenna.
- Increase the separation between the equipment and receiver.
- Connect the equipment into an outlet on a circuit different from that to which the receiver is connected.
- Consult the dealer or an experienced radio/TV technician for help

The device has been evaluated to meet general RF exposure requirement. The device can be used in portable exposure condition without restriction.

Design and manufacture • Shenzhen, China

Ulinkal

QXX-QA-V1.0