AB5705C

Audio Player Microcontroller

Versions: 0.0.2
2024.11.28

Declaration

Copyright © 2024, www. bluetrum.com.
All Rights Reserved. No Unauthorized Distribution.
Bluetrum reserves the right to make changes without further notice to any products herein to improve reliability, function or design.

For further information on the technology, product and business term, please contact Bluetrum Company.
For sales or technical support, please send email to the address:
Sales: sales@bluetrum.com
Technical: project@bluetrum.com

Revision History

Date	Version	Comments	Revised by
2024-09-29	0.0.1	First draft	Leo
2024-11-28	0.0.2	Update to BT6.0	Leo

COPYRIGHT © 2024, WWW. BLUETRUM.COM. ALL RIGHTS RESERVED

Table of Contents

TABLE OF CONTENTS 2
1 GENERAL DESCRIPTION 3
2 PRODUCT FEATURES 4
3 PACKAGE DEFINITION 6
3.1 PIN ASSIGNMENT 6
3.2 PIN DESCRIPTIONS 6
4 CHARACTERISTICS 11
4.1 ABSOLUTE MAXIMUM RATINGS 11
4.2 PMU PARAMETERS 11
4.3 IO PARAMETERS 12
4.4 AUDIO DAC PARAMETERS 13
4.5 AUDIO ADC PARAMETERS 14
4.6 BT PARAMETERS 15
4.7 CURRENT PARAMETERS 15
5 PACKAGE INFORMATION 16
6 TAPE AND REEL INFORMATION 18

COPYRIGHT © 2024, WWW. BLUETRUM.COM. ALL RIGHTS RESERVED

1 General Description

This document provides an overview of the AB570X Bluetooth audio SoC, designed for use in a wide range of portable audio applications. The chipset is a highly integrated solution that combines a 32-bit RISC-V processor core with DSP instruction, high-performance audio processor, Bluetooth low energy radio, power management unit, and various peripherals, offering a compelling balance of performance, power efficiency, and flexibility.

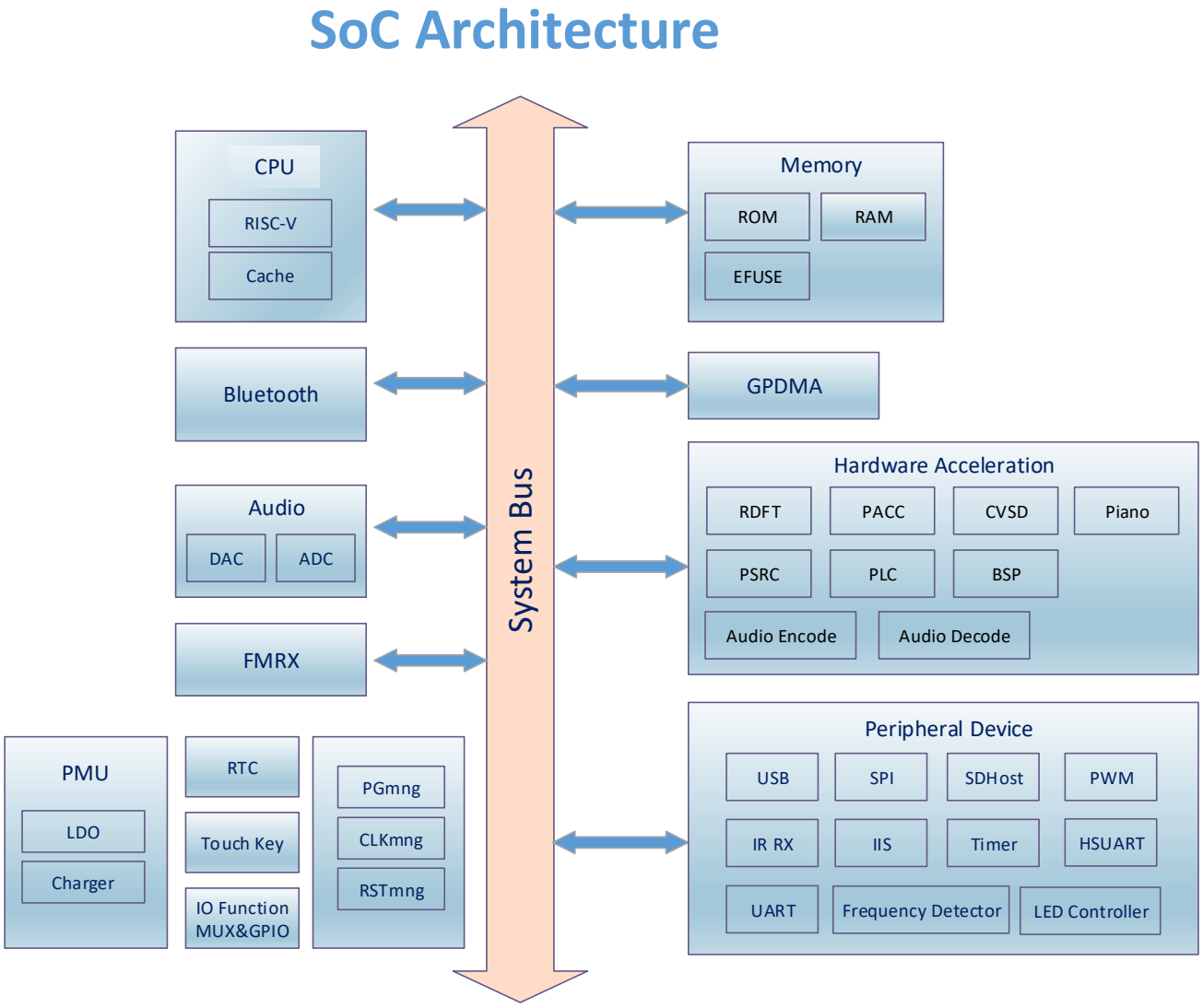

Figure 1-1 AB5705C Block Diagram

COPYRIGHT © 2024, WWW. BLUETRUM.COM. ALL RIGHTS RESERVED

2 Product Features

CPU and Flexible IO

- High performance 32bit RISC-V processor Core with DSP instruction
- RISC-V typical speed: 187MHz
- Program memory: internal 4M bit flash
- Internal 196KB RAM for data and program
- Flexible GPIO pins with Programmable pull-up and pull-down resistors
- Support GPIO wakeup or interrupt

Bluetooth Radio

- Compliant to Bluetooth 6.0 （QDID: Q342943）
- TX output power +9dBm in typical
- RX Sensitivity with -94dBm @BR
- RX Sensitivity with -94dBm @EDR

FM Tuner

- Support frequency band 76~108MHz;
- Auto search tuning;
- Programmable de-emphasis(50/75uS);
- Receive signal strength indicator (RSSI);

Audio Interface

- Audio codec with 16bit mono DAC and 16bit mono ADC;
- Support flexible audio EQ adjust;
- Support Sample rate 8, 11.025, 12, 16, 22.05, 32, 44.1 and 48KHz;
- 4 channels Analog AUX input;
- One channel MIC amplifier input;
- High performance mono audio ADC with 92dB SNR;
- High performance audio DAC with 107dB SNR,

Peripheral and Interfaces

- SD Card Host controller x1；
- Master/Slave SPI x2；
- Audio interface IIS master/slave x1；
- Full speed USB 2.0 HOST/DEVICE controller x1;
- Watch Dog;
- IR controller;
- LED controller x6;
- 12 Channels 10-bit SARADC;
- Frequency detector;
- Normal UART x3; High Speed UART with CTS/RTS x1;
- 16-bit Basic Timer x2;
- 32-bit Basic Timer x3, multi-function Timer that supports capture mode x2, multi-function Timer that supports both capture mode and PWM mode x1；
- Hardware Cap-sense Touch Key;
- Built in PMU; capless LDOs; LDO; Li-battery charger;

Applications

- KTV Bluetooth Speaker
- Bluetooth Speaker

COPYRIGHT © 2024, WWW. BLUETRUM.COM. ALL RIGHTS RESERVED

Key Parameters

Part Num： AB5705C

Parameter	Value
Typical TX Power	+9 dBm
RX Sensitivity	-94 dBm
TX Current @0dBm,3V, LDO mode	TBC
RX Current @-94dBm,3V, LDO mode	TBC
Sleep Current with retention	TBC
Deep Sleep Mode Current	TBC
Sniff Mode Current	TBC
Flash	4Mbit
RAM	180KB + 16KB cache
Supply Voltage	2.8~4.5V
GPIO	14
Operating Temperature	-40~+85°C
Package Size	SSOP24-150mil
PMU	LDO mode + Charger

COPYRIGHT © 2024, WWW. BLUETRUM.COM. ALL RIGHTS RESERVED

3 Package Definition

3.1 Pin Assignment

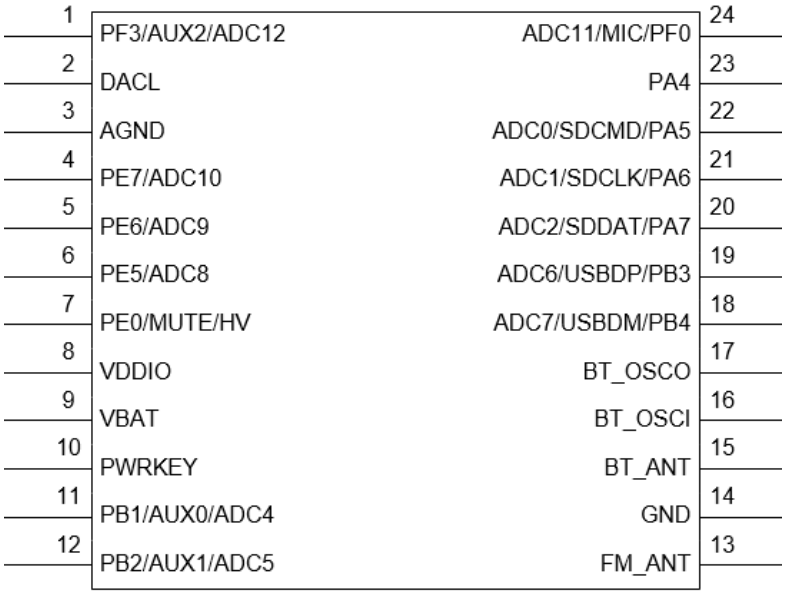

Figure 3-1 Pin Assignment

3.2 Pin Descriptions

Table 3-1 SSOP24 Pin Description

Pin No.	Name	Type	Drive Current(mA)	Function
1	PF3	I/O	8/32	ADC12 AUX2 LEDC_DAT-G6 RX1-G2 HSTRX-G9 INT4-G3 PWM5-G3 PF3
2	DACL	A	/	DACL
3	AGND	GND	/	DAC Ground
4	PE7	I/O	8/32	ADC10 AUX3 SDDAT0-G3

COPYRIGHT © 2024, WWW. BLUETRUM.COM. ALL RIGHTS RESERVED

				LEDC_DAT-G4 SPI1DO/SPI1DATA-G4 IISDO/DAT-G2 TX0-G5 TX2-G3 HSTRX-G8 INT3-G1 PWM1-G3 TMR4CAP_G1/IR_G8 PE7
5	PE6	I/O	8/32	ADC9 MICBIAS SDCLK-G3 SPI1CLK-G4 IISLRCLK-G2 RX0-G5 RX2-G3 HSTRX-G7 INT2-G2 FMOSC-G6 PWM0-G3 TMR3CAP_G7/IR_G7 PE6
6	PE5	I/O	8/32	ADC8 SDCMD-G3 SPI1DI-G4/SPI2W_DIO1-G4 IISSCLK-G2 INT2-G1 FMOSC-G5 PWM5-G2 TMR3CAP_G6/IR_G6 PE5
7	PE0	I/O	8	SPI1DI-G1/SPI2W_DIO1-G1 IISDI-G2 TX0-G4 INT1-G1 PWM4-G2 TMR3CAP_G5/IR_G5 PE0
8	VDDIO	PWR	/	VDDIO power output
9	VBAT	PWR	/	VBAT power input
10	PWRKEY	A	/	Power key input
11	PB1	I/O	8/32	ADC4 AUX0 SDCLK-G2

COPYRIGHT © 2024, WWW. BLUETRUM.COM. ALL RIGHTS RESERVED

				SPI1CLK-G3 RX0-G2 RX2-G2 HSTRX-G3 INT1-G0 FMOSC-G3 PWM0-G2 PB1
12	PB2	I/O	8/32	ADC5 AUX1 SDDAT0-G2 LEDC_DAT-G2 SPI1DO/SPI1DATA-G3 IISMCLK-G2 TX0-G2 TX2-G2 HSTRX-G4 INT2-G0 FMOSC-G4 PWM1-G2 TMR3CAP_G4/IR_G4 PB2
13	FM_ANT	A	/	FMRX ANT
14	GND	GND	/	Ground
15	BT_ANT	A	/	BT ANT
16	BT_OSCI	A	/	24M OSC input
17	BT_OSCO	A	/	24M OSC output
18	PB4	I/O	8/32	ADC7 USBDM SDDAT0-G4 LEDC_DAT-G3 SPI1DO/SPI1DATA-G1 RX0-G3 HSTRX-G6 INT4-G0 FMOSC-G7 PWM3-G2 PB4
19	PB3	I/O	8/32	ADC6 USBDP SPI1CLK-G1 TX0-G3 HSTRX-G5 INT3-G0 PWM2-G2

COPYRIGHT © 2024, WWW. BLUETRUM.COM. ALL RIGHTS RESERVED

				PB3
20	PA7	I/O	8/32	ADC2 SDDAT0-G1 LEDC_DAT-G1 SPI1DO/SPI1DATA-G2 IISDO/DAT-G1 TX0-G1 TX1-G1 HSTRX-G2 INT0-G0 PWM4-G1 TMR3CAP_G2/IR_G2 PA7
21	PA6	I/O	8/32	ADC1 SDCLK-G1/G4 SPI1CLK-G2 IISLRCLK-G1 RX0-G1 RX1-G1 HSTRX-G1 INT0-G1 FMOSC-G2 PWM3-G1 PA6
22	PA5	I/O	8/32	ADC0 SDCMD-G1/G4 SPI1DI-G2/SPI2W_DIO1-G2 IISSCLK-G1 HSUART_RTS INT0-G2 FMOSC-G1 PWM2-G1 PA5
23	PA4	I/O	8/32	IISDI-G1 TX2-G1 INT0-G3 PWM1-G1 TMR3CAP_G1/IR_G1 PA4
24	PF0	I/O	8/32	ADC11 MIC LEDC_DAT-G5 TX1-G2 HSUART_CTS INT3-G2 PWM2-G3

COPYRIGHT © 2024, WWW. BLUETRUM.COM. ALL RIGHTS RESERVED

				TMR5CAP_G1/IR_G9 PF0

Note: I/O: Digital input/output; I : Digital input; A : Analog Pin; PWR: Power Pin; GND: Ground.

COPYRIGHT © 2024, WWW. BLUETRUM.COM. ALL RIGHTS RESERVED

4 Characteristics

4.1 Absolute Maximum Ratings

Table 4-1 Absolute Maximum Ratings

Sym	Characteristics	Min	Typ	Max	Unit	Conditions
Tamb	Ambient Temperature	-40		+80	℃	
IIN	Input Current	-32		+32	mA	
VIN	Input Voltage	-0.3		VDDIO+0.3	V	VDDIO=3.3V

4.2 PMU Parameters

Table 4-2 PMU voltage input Parameters

Sym	Characteristics	Min	Typ	Max	Unit	Conditions
VUSB	Charger Voltage input	4.6	5.0	5.5	V	
VBAT	Voltage input	2.8	3.7	4.5	V	

Table 4-3 IO voltage input parameters

Sym	Characteristics	Min	Typ	Max	Unit	Conditions
V_{IL}	CMOS Low Level Input Voltage	0		0.3*VDDIO	V	VDDIO=3.3V
V_{IH}	CMOS Low Level Input Voltage	0.7*VDDIO		VDDIO	V	
V_{TH}	CMOS Threshold Voltage		0.5*VDDIO		V	

Table 4-4 VDDIO LDO Parameters

Sym	Characteristics	Min	Typ	Max	Unit	Conditions
VDDIO	3.3V LDO voltage output	2.4	3.3	3.6	V	Load current <10mA Light Loading condition Step 0.1V
△VVDDIO	Output Mismatch 1-sigma	-	17	-	mV	VDDIO=3.3v
ILOAD	Maximum output current	-	-	120	mA	@VBAT=3.6v
ISC	Short Circuit Current Limit	-	-	200	mA	@VBAT=3.8v

Table 4-5 VDDBT LDO Parameters

Sym	Characteristics	Min	Typ	Max	Unit	Conditions
VDDBT	1.2V LDO voltage output	0.85	1.25	1.6	V	Load current <5mA Light Loading condition Step 0.05V
△VVDDBT	Output Mismatch 1-sigma	-	9	-	mV	VDDBT=1.2v
ILOAD	Maximum output current	-	-	70	mA	@VBAT=3.0v

COPYRIGHT © 2024, WWW. BLUETRUM.COM. ALL RIGHTS RESERVED

Sym	Characteristics	Min	Typ	Max	Unit	Conditions
ISC	Short Circuit Current Limit	-	-	200	mA	@VBAT=3.8v

Table 4-6 VDDCORE LDO Parameters

Sym	Characteristics	Min	Typ	Max	Unit	Conditions
VDDCORE	1.2V LDO voltage output	0.7	1.1	1.35	V	Load current <3mA Light Loading condition Step 0.025V
△VVDDCORE	Output Mismatch 1-sigma	-	6	-	mV	VDDCORE=1.1v
ILOAD	Maximum output current	-	-	75	mA	@VBAT=3.0v
ISC	Short Circuit Current Limit	-	-	140	mA	@VBAT=3.8v

Table 4-7 Battery Charge

Symbol	Parameter	Min	Typ	Max	Unit	Condition
VUSB	Charger input voltage	4.6	5.0	5.5	V	
$VBAT_{float}$	Charge Voltage	4.15	4.20	4.25	V	VUSB>4.6V
			4.35		V	VUSB>4.75V
			4.40		V	VUSB>4.8V
			4.45		V	VUSB>4.85V
ICH	Charge current	5		400	mA	VBAT<=$VBAT_{float}$ -150mV VUSB>=$VBAT_{folat}$ +550mV Step=5mA
IEnd	End of charge current	2.5		37.5	mA	Step=2.5mA
VTrickle	Trickle charge Voltage	2.9	3.0	3.1	V	VUSB>4.6V

4.3 IO Parameters

Table 4-8 I/O Parameters

GPIO—Electrical Characteristics							
Symbol	Description	Related GPIO	Min	Typical	Max	Units	Conditions
V_{IL}	Low-level input voltage		-0.3	1.32	0.93	V	VDDIO=3.3V
V_{IH}	High-level input voltage		2.31	1.98	3.6	V	VDDIO=3.3V
Driver Ability 1	Output Driver Ability 1			32		mA	VDDIO=3.3V
Driver Ability 0	Output Driver Ability 0			8		mA	VDDIO=3.3V
R_{PUP0}	Internal pull-up resister 0		8	10	12	KΩ	
R_{PUP1}	Internal pull-up resister 1		0.24	0.3	0.36	KΩ	
R_{PUP2}	Internal pull-up resister 2		160	200	240	KΩ	
R_{PDN0}	Internal pull-down resister 0		8	10	12	KΩ	
R_{PDN1}	Internal pull-down resister 1		0.24	0.3	0.36	KΩ	
R_{PDN2}	Internal pull-down resister 2		160	200	240	KΩ	

COPYRIGHT © 2024, WWW. BLUETRUM.COM. ALL RIGHTS RESERVED

Table 4-9 Internal Resistor Characteristics

Port	General Output	High Drive	Internal Pull-Up Resistor	Internal Pull-Down Resistor	Comment
PA3-PA7 PB0-PB4 PE5-PE7 PF0-PF3 PG1/2/4/5	8mA	32mA	0.3K/10K/200K	0.3K/10K/200K	Internal pull-up/pull-down resistance accuracy +/-20%
PE0 (High Voltage IO)	8mA	-	10K	10K	

4.4 Audio DAC Parameters

Table 4-10 Single-ended Mode

Parameter	Conditions	Min	Typ	Max	Unit
Resolution				16	Bits
Fsample		8	/	96	KHz
SNR	Sin -1Khz; BW=20-20KHz; A-Weighted Output Level : 752.5mVrms Fsample 48KHz , 32R;	/	103.5	/	dB
THD+N	Sin -1Khz; BW=20-20KHz; A-Weighted Output Level : 752.5mVrms Fsample 48KHz , 32R;	/	-78.1	/	dB
Noise Floor	Audio PA on A-WT without DRE		5.012		uVrms
DNR	Sin -1Khz; BW=20-20KHz; A-Weighted Fsample 48KHz , 32R;		99.2		

Table 4-11 Pseudo-differential Mode

Parameter	Conditions	Min	Typ	Max	Unit
Resolution				16	Bits
Fsample		8	/	48	KHz

COPYRIGHT © 2024, WWW. BLUETRUM.COM. ALL RIGHTS RESERVED

SNR	Sin -1Khz; BW=20-20KHz; A-Weighted Output Level : 1.341Vrms Fsample 48KHz , 32R;	/	106.7	/	dB
THD+N	Sin -1Khz; BW=20-20KHz; A-Weighted Output Level : 1.341Vrms Fsample 48KHz , 32R;	/	-80.9	/	dB
Noise Floor	Audio PA on A-WT without DRE		6.166		uVrms
DNR	Sin -1Khz; BW=20-20KHz; A-Weighted Fsample 48KHz , 32R;		101.6		

Note： This mode output are LP and RP

4.5 Audio ADC Parameters

Table 4-12 Audio ADC Parameters

Mode	Sym	Characteristics	Min	Typ	Max	Unit	Conditions
Differential Mode	SNR		-	92	-	dB	VCM cap=NC VDDMIC cap=1uF with A-wt filter Input 4dBV @ Fin=1KHz
	THD+N		-	-82	-	dB	
	Input Range	Maximum input voltage	-	4	-	dBV	
External-RC Single mode	PGA Gain		0		12	dB	0dB / 6dB /12dB
	SNR		-	87	-	dB	VCM cap=NC VDDMIC cap=1uF with A-wt filter Input -2dBV @ Fin=1KHz PGA Gain=0dB
	THD+N		-	-65	-	dB	
	Input Range	Maximum input voltage	-	-2	-	dBV	
Internal-RC Single mode	PGA Gain		0		12	dB	0dB / 6dB /12dB
	SNR		-	89	-	dB	VCM cap=NC VDDMIC cap=1uF with A-wt filter Input 0dBV @ Fin=1KHz PGA Gain=0dB
	THD+N		-	-71	-	dB	
	Input Range	Maximum input voltage	-	0	-	dBV	

COPYRIGHT © 2024, WWW. BLUETRUM.COM. ALL RIGHTS RESERVED

4.6 BT Parameters

Table 4-13 BT Parameters

Characteristics	Min	Typical	Max	Unit	Conditions
Transmit Power	-	9	10	dBm	
RMS DEVM	-	7	-	%	Typical TX power 2-DH5 packet
Peak DEVM	-	15		%	
EDR Relative Transmit Power		-0.3		dB	
Sensitivity @ Basic Rate		-94		dBm	BER=0.1%, using DH5 packet
Sensitivity @ EDR		-94		dBm	BER=0.01%, using 2-DH5 packet
Sensitivity @ 1M BLE		-98.5	-	dBm	PER=30.8%, 37byte
Sensitivity @ 2M BLE		-95.5	-	dBm	PER=30.8%, 37byte

4.7 Current Parameters

Table 4-14 Current Parameters

Mode	Characteristics	Min	Typ	Max	Unit	Conditions
With DC DC Buck Mode	TX RF Current @Pout = 0dBm		TBC		mA	V_{BAT}=3.3V
	RX RF Current @Sensitivity level		TBC		mA	
	Supply Current @Sleep with RAM retention		TBC		uA	
	Supply Current @Deep sleep		TBC		uA	
	Supply Current @Power Down		TBC		uA	
	Supply Current @Sniff		TBC		uA	500ms interval
	Supply Current @Discoverable		TBC		uA	500ms interval
W/O DC DC LDO Mode	TX RF Current @Pout = 0dBm		TBC		mA	V_{BAT}=3.3V
	RX RF Current @Sensitivity level		TBC		mA	
	Supply Current @ Sleep with RAM retention		TBC		uA	
	Supply Current @Deep sleep		TBC		uA	
	Supply Current @Power Down		TBC		uA	
	Supply Current @Sniff		TBC		uA	500ms interval
	Supply Current @Discoverable		TBC		uA	500ms interval

COPYRIGHT © 2024, WWW. BLUETRUM.COM. ALL RIGHTS RESERVED

5 Package Information

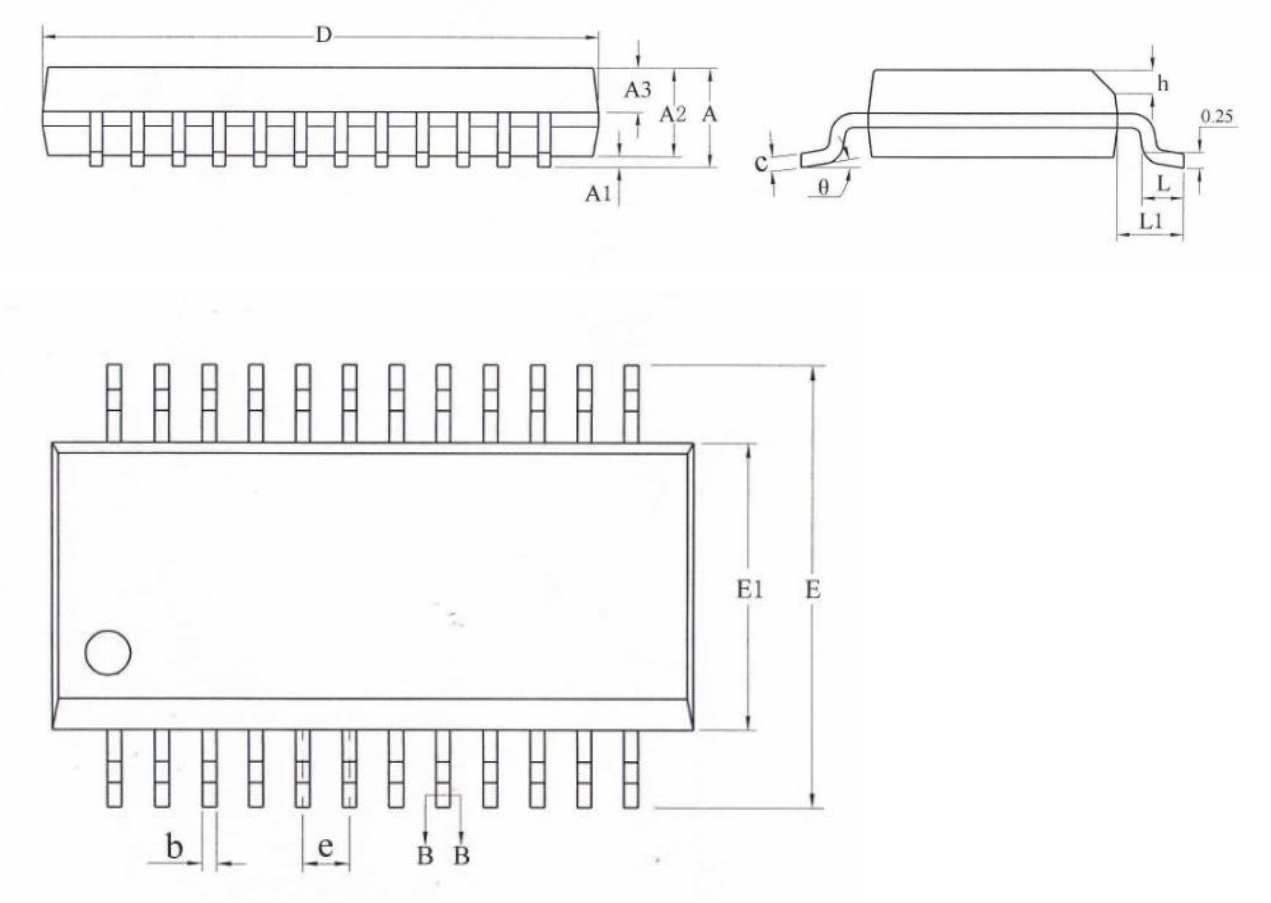

COPYRIGHT © 2024, WWW. BLUETRUM.COM. ALL RIGHTS RESERVED

SYMBOL	MILLIMETER		
	MIN	NOM	MAX
A	—	—	1.75
A1	0.10	0.15	0.25
A2	1.30	1.40	1.50
A3	0.60	0.65	0.70
b	0.23	—	0.31
b1	0.22	0.25	0.28
c	0.20	—	0.24
c1	0.19	0.20	0.21
D	8.55	8.65	8.75
E	5.80	6.00	6.20
E1	3.80	3.90	4.00
e	0.635BSC		
h	0.30	—	0.50
L	0.50	—	0.80
L1	1.05REF		
θ	0	—	8°

COPYRIGHT © 2024, WWW. BLUETRUM.COM. ALL RIGHTS RESERVED

6 Tape and Reel Information

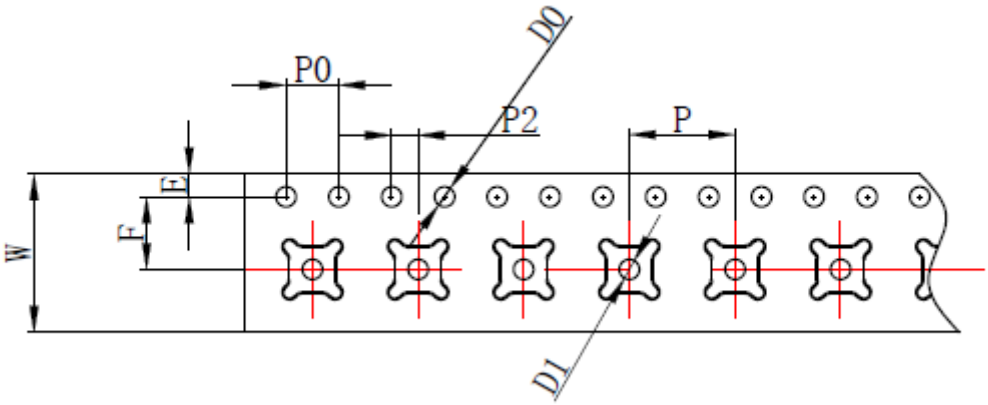

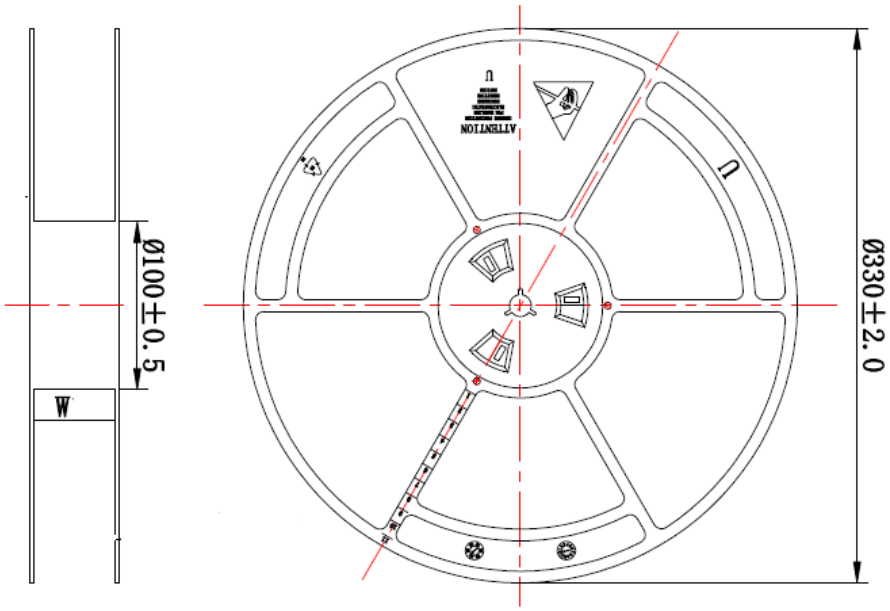

Package Code	Number of Pins	Body Size	Package Pitch: P(mm)	Hold Pitch: P0（mm）	Reel Diameter (mm)	Reel Width (mm)
SSOP24	24	150mil	8	4	330	16

COPYRIGHT © 2024, WWW. BLUETRUM.COM. ALL RIGHTS RESERVED

Contact us

Address： 1301-1 Building A, Zhihui Square, No.4068 Qiaoxiang Road, GaofaCommunity, Shahe Street, Nanshan District, Shenzhen, P.R.China

E-mail： info@bluetrum.com

Website: www.bluetrum.com

COPYRIGHT © 2024, WWW. BLUETRUM.COM. ALL RIGHTS RESERVED

NOTE: This equipment has been tested and found to comply with the limits for a Class B digital
device, pursuant to Part 15 of the FCC Rules. These limits are designed to provide reasonable
protection against harmful interference in a residential installation. This equipment generates,
uses and can radiate radio frequency energy and, if not installed and used in accordance with
the instructions, may cause harmful interference to radio communications. However, there is no
guarantee that interference will not occur in a particular installation.
If this equipment does cause harmful interference to radio or television reception, which can be
determinedbyturningtheequipmentoffandon,theuserisencouragedtotrytocorrectthe
interferenceby one or more of the followingmeasures:
--Reorient or relocate the receiving antenna.
-- Increase the separation between the equipment and receiver.
oe
connected.
-- Consult the dealer or an experienced radio/TV technician for help.
Warning: changes or modifications not expressly approved by the party responsible for compliance could void the user's authority to operate the equipment
Radiation Exposure Statement

This equipment complies with FCC radiation exposure limits set forth for an uncontrolled environment.
The device has been evaluated to meet general RF exposure requirement. The device can be used in portable exposure condition without restriction.

This device complies with Part 15 of the FCC Rules. Operation is subject to the following two conditions:
(1) This device may not cause harmful interference;
(2) This device must accept any interference received, including interference that may cause undesired operation.

NOTE: This equipment has been tested and found to comply with the limits for a Class B digital
device, pursuant to Part 15 of the FCC Rules. These limits are designed to provide reasonable
protection against harmful interference in a residential installation. This equipment generates,
uses and can radiate radio frequency energy and, if not installed and used in accordance with
the instructions, may cause harmful interference to radio communications. However, there is no
guarantee that interference will not occur in a particular installation.
If this equipment does cause harmful interference to radio or television reception, which can be
determinedbyturningtheequipmentoffandon,
theuserisencouragedtotrytocorrectthe
interferenceby one or more of the followingmeasures:
--Reorient or relocate the receiving antenna.
-- Increase the separation between the equipment and receiver.
oe
connected.
-- Consult the dealer or an experienced radio/TV technician for help.
Warning: changes or modifications not expressly approved by the party responsible for
compliance could void the user's authority to operate the equipment
Radiation Exposure Statement
This equipment complies with FCC radiation exposure limits set forth for an uncontrolled
environment.
The device has been evaluated to meet general RF exposure requirement. The device can be used in portable exposure condition without restriction.

This device complies with Part 15 of the FCC Rules. Operation is subject to the following two conditions:
(1) This device may not cause harmful interference;
(2) This device must accept any interference received, including interference that may cause undesired operation.