FCC Test Report

Report No: FCS202603266W01

Issued for

Applicant:	Huali Hui (Jiangmen) Electronic Technology Co., Ltd
Address:	3C, 3,F, Factory 1, No.23, Zone C, Foreign & Priva Capital Industrial Zone, Enping, Guangdong, China
Product Name:	2.4G Wireless Microphone
Brand Name:	N/A
Model Name:	Q1
Series Model:	Q2,Q3,Q4,Q5,Q6,Q7,Q8,Q9,Q10,T1,T2,T3,T4,T5,S1, S2,S3,S4,S5,S6,S7,S8,D1,D2,D3,D4,D5,D6,D7,D8, R1,R2,R3,R4,R5,R6,YY-710,YY-720,YY-730,YY-740, YY-7,50,YY-760,YY-770,YY-780,YY-790,W-810,W-820, W-830,W-840,W-850,W-860,W-870,W-880,W-890
FCC ID:	2BVSC-Q1

Issued By: Flux Compliance Service Laboratory
Add: Room 105 Floor Bao hao Technology Building 1 NO.15 Gong ye West Road Hi-Tech Industrial, Song shan lake Dongguan
Tel: 0769-27280901 Fax:0769-27280901 http://www.fcs-lab.com

TEST RESULT CERTIFICATION

Applicant Name..... :	Huali Hui (Jiangmen) Electronic Technology Co., Ltd.
Address..... :	3C, 3,F, Factory 1, No.23, Zone C, Foreign & Private Capital Industrial Zone, Enping, Guangdong, China
Manufacture Name..... :	Huali Hui (Jiangmen) Electronic Technology Co., Ltd.
Address..... :	3C, 3,F, Factory 1, No.23, Zone C, Foreign & Private Capital Industrial Zone, Enping, Guangdong, China

Product Description

Product Name..... :	2.4G Wireless Microphone
Brand Name .....:	N/A
Model Name..... :	Q1
Series Model.....:	See the first page of the report
Test Standards..... :	FCC Rules and Regulations Part 15 Subpart C, Section 249
Test Procedure..... :	ANSI C63.10:2020

This device described above has been tested FCS, the test results show that the equipment under test (EUT) is in compliance with the FCC requirements. And it is applicable only to the tested sample identified in the report.
This report shall not be reproduced except in full, without the written approval of FCS, this document may be altered or revised by FCS, personal only, and shall be noted in the revision of the document..

Date of Test..... :

Date (s) of performance of tests. :	Mar. 24, 2026~Apr. 03, 2026
Date of Issue.....:	Apr. 03, 2026
Test Result.....:	Pass

Tested by : Jojo Wu

(Jojo Wu)

Reviewed by : Jojo Wu

(Jojo Wu)

Approved by : Jack Wang

(Jack Wang)

Table of Contents **Page**

1. SUMMARY OF TEST RESULTS 5
1.1 TEST FACTORY 6
1.2 MEASUREMENT UNCERTAINTY 6
2. GENERAL INFORMATION 7
2.1 GENERAL DESCRIPTION OF THE EUT 7
2.2 DESCRIPTION OF THE TEST MODES 9
2.3 DESCRIPTION OF NECESSARY ACCESSORIES AND SUPPORT UNITS 10
2.4 EQUIPMENTS LIST 11
3 CONDUCTED EMISSION MEASUREMENT 12
3.1 LIMIT 12
3.2 TEST PROCEDURE 12
3.3 TEST SETUP 13
3.4 TEST RESULTS 14
4. RADIATED EMISSION MEASUREMENT 16
4.1 LIMIT 16
4.2 TEST PROCEDURE 17
4.3 TEST SETUP 18
5. BAND EDGE TEST 25
5.1 LIMIT 25
5.2 TEST PROCEDURE 25
5.3 TEST SETUP 26
5.4 TEST RESULTS 27
6. 20 DB BANDWIDTH TEST 29
6.1 LIMIT 29
6.2 TEST PROCEDURE 29
6.3 TEST SETUP 29
6.4 TEST RESULTS 30
7. ANTENNA REQUIREMENT 32
7.1 STANDARD REQUIREMENT 32
7.2 EUT ANTENNA 32

Revision History

Rev.	Issue Date	Effect Page	Contents
00	Apr. 03, 2026	N/A	Initial Issue

1. SUMMARY OF TEST RESULTS

FCC Part 15.249,Subpart C			
Standard Section	Test Item	Judgment	Remark
15.207	Conducted Emission	PASS	--
15.205(a), 15.209(a), 15.249(a), 15.249(c)	Radiated Spurious Emission	PASS	--
15.209	Field strength of fundamental	PASS	--
15.249(d)	Band Edge Emission	PASS	--
15.215(c)	20dB Bandwidth	PASS	--
15.203	Antenna Requirement	PASS	--

NOTE:

(1)" N/A" denotes test is not applicable in this Test Report

(2) All tests are according to ANSI C63.10-2020

1.1 TEST FACTORY

Company Name:	Flux Compliance Service Laboratory
Address:	Room 105 Floor Bao hao Technology Building 1 NO.15 Gong ye West Road Hi-Tech Industrial, Song shan lake Dongguan
Telephone:	+86-769-27280901
Fax:	+86-769-27280901
FCC Test Firm Registration Number: 514908 Designation number: CN0127 A2LA accreditation number：5545.01	

1.2 MEASUREMENT UNCERTAINTY

The reported uncertainty of measurement **y ±U**, where expended uncertainty **U** is based on a standard uncertainty multiplied by a coverage factor of **k=2**, providing a level of confidence of approximately **95** %.

No.	Item	Uncertainty
1	RF output power, conducted	±0.71dB
2	Unwanted Emissions, conducted	±2.98 dB
3	Conducted Emission (9KHz-150KHz)	±4.13 dB
4	Conducted Emission (150KHz-30MHz)	±4.74 dB
5	All emissions,radiated(<1G) 30MHz-1000MHz	±3.2 dB
6	All emissions,radiated (1GHz -18GHz)	±3.66 dB
7	All emissions,radiated (18GHz -40GHz)	±4.31 dB
8	Occupied bandwidth	±0.3 dB

2. GENERAL INFORMATION

2.1 GENERAL DESCRIPTION OF THE EUT

Product Name	2.4G Wireless Microphone
Trade Name	N/A
Model Name	Q1
Series Model	See the first page of the report
Model Difference	PCB board, structure and internal of these model(s) are the same, only differing in Model name and color. So no additional models were tested
Channel List	Please refer to the Note 2.
Specification	Frequency: 2402-2478MHz Modulation: GFSK Channel number: 3CH
Power Supply	DC 5V
Battery	DC 3.7V 50mA
Hardware version number	V1.0
Software version number	V1.0
Connecting I/O Port(s)	Please refer to the User's Manual

Note:

1. For a more detailed features description, please refer to the manufacturer’s specifications or the User's Manual.

2. **Channel List**

Channel	Frequency
The low channel	2402
The middle channel	2441
The High channel	2478

3. Table for Filed Antenna

Ant.	Brand	Model Name	Antenna Type	Connector	Gain (dBi)	NOTE
1	N/A	N/A	PCB antenna	N/A	0	Antenna

2.2 DESCRIPTION OF THE TEST MODES

To investigate the maximum EMI emission characteristics generates from EUT, the test system was pre-scanning tested base on the consideration of following EUT operation mode or test configuration mode which possible have effect on EMI emission level. Each of these EUT operation mode(s) or test configuration mode(s) mentioned above was evaluated respectively.

Test software:

The test softeware was used to control EUT work in continuous TX mode, and select test channel, Wireless mode as below table

No.	Test model descrption
1	Low channel GFSK
2	Middle channel GFSK
3	High channel GFSK

Note:

1. All the test modes can be supply by battery, only the result of the worst case recorded in the report. GFSK mode is worst mode.
2. For radiated emission, 3 axis were chosen for testing for each applicable mode.
3. The EUT used fully charge battery when tested.
4. During the test, the dutycycle>98%, the test voltage was tuned from 85% to 115% of the Nominal rate supply votage, and found that the worst case was the nominal rated supply condition, So the report just shows that condition's data

Configuration and peripherals

Mode 1:

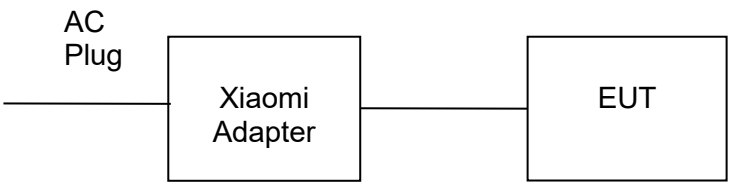

2.3 DESCRIPTION OF NECESSARY ACCESSORIES AND SUPPORT UNITS

The EUT has been tested as an independent unit together with other necessary accessories or support units. The following support units or accessories were used to form a representative test configuration during the tests.

Necessary accessories

Item	Equipment	Mfr/Brand	Model/Type No.	Serial No.	Note
1	Adapter	Xiaomi	AD652G	N/A	Test use

Support units

Item	Equipment	Mfr/Brand	Model/Type No.	Serial No.	Note
N/A	N/A	N/A	N/A	N/A	N/A

Note:

(1) The support equipment was authorized by Declaration of Confirmation.

(2) For detachable type I/O cable should be specified the length in cm in 『Length』 column.

(3) “YES” is means “shielded” “with core”; “NO” is means “unshielded” “without core”.

2.4 EQUIPMENTS LIST

Radiation Test equipment

Kind of Equipment	Manufacturer	Type No.	Company No.	Last calibration	Calibrated until
EMI Test Receiver	R&S	ESRP 3	FCS-E001	2025.08.25	2026.08.24
Signal Analyzer	R&S	FSV40-N	FCS-E012	2025.08.25	2026.08.24
Active loop Antenna	ZHINAN	ZN30900C	FCS-E013	2025.08.25	2026.08.24
Bilog Antenna	SCHWARZBECK	VULB 9168	FCS-E002	2025.08.25	2026.08.24
Horn Antenna	SCHWARZBECK	BBHA 9120D	FCS-E003	2025.08.25	2026.08.24
SHF-EHF Horn Antenna (18G-40GHz)	A-INFO	LB-180400-KF	FCS-E018	2025.08.25	2026.08.24
Pre-Amplifier(0.1M-3G Hz)	EMCI	EM330N	FCS-E004	2025.08.25	2026.08.24
Pre-Amplifier (1G-18GHz)	N/A	TSAMP-0518SE	FCS-E014	2025.08.25	2026.08.24
Pre-Amplifier (18G-40GHz)	TERA-MW	TRLA-0400	FCS-E019	2025.08.25	2026.08.24
Temperature & Humidity	HTC-1	victor	FCS-E005	2025.08.25	2026.08.24
Testing Software	EZ-EMC(Ver.STSLAB 03A1 RE)				

Conduction Test equipment

Kind of Equipment	Manufacturer	Type No.	Company No.	Last calibration	Calibrated until
EMI Test Receiver	R&S	ESPI	FCS-E020	2025.08.25	2026.08.24
LISN	R&S	ENV216	FCS-E007	2025.08.25	2026.08.24
LISN	ETS	3810/2NM	FCS-E009	2025.08.25	2026.08.24
Temperature & Humidity	HTC-1	victor	FCS-E008	2025.08.25	2026.08.24
Testing Software	EZ-EMC(Ver.EMC-CON 3A1.1)				

RF Connected Test

Kind of Equipment	Manufacturer	Type No.	Company No.	Last calibration	Calibrated until
MXA SIGNAL Analyzer	Keysight	N9020A	FCS-E015	2025.08.25	2026.08.24
Spectrum Analyzer	Agilent	E4447A	MY50180039	2025.08.25	2026.08.24
Spectrum Analyzer	R&S	FSV-40	101499	2025.08.25	2026.08.24
Testing Software	LzRf V1.0				

Test Equipment Calibration

All of the test equipment is effective use and calibration certification institution, GRGT, the address is 163 tianhe district in huangpu road xiping cloud road .Guangzhou,China

3 CONDUCTED EMISSION MEASUREMENT

3.1 LIMIT

Operating frequency band. In case the emission fall within the restricted band specified on Part 207(a) limit in the table below has to be followed.

FREQUENCY (MHz)	Conducted Emissionlimit (dBuV)	
	Quasi-peak	Average
0.15 -0.5	66 - 56 *	56 - 46 *
0.50 -5.0	56.00	46.00
5.0 -30.0	60.00	50.00

Note:
(1) The tighter limit applies at the band edges.
(2) The limit of " * " marked band means the limitation decreases linearly with the logarithm of the frequency in the range.

3.2 TEST PROCEDURE

The following table is the setting of the receiver

Receiver Parameters	Setting
Attenuation	10 dB
Start Frequency	0.15 MHz
Stop Frequency	30 MHz
IF Bandwidth	9 kHz

a. The EUT was 0.8 meters from the horizontal ground plane and 0.4 meters from the vertical ground plane with EUT being connected to the power mains through a line impedance stabilization network (LISN). All other support equipments powered from additional LISN(s). The LISN provide 50 Ohm/ 50uH of coupling impedance for the measuring instrument.
b. Interconnecting cables that hang closer than 40 cm to the ground plane shall be folded back and forth in the center forming a bundle 30 to 40 cm long.
c. I/O cables that are not connected to a peripheral shall be bundled in the center. The end of the cable may be terminated, if required, using the correct terminating impedance. The overall length shall not exceed 1 m.
d. LISN at least 80 cm from nearest part of EUT chassis.
e. For the actual test configuration, please refer to the related Item –EUT Test Photos.

3.3 TEST SETUP

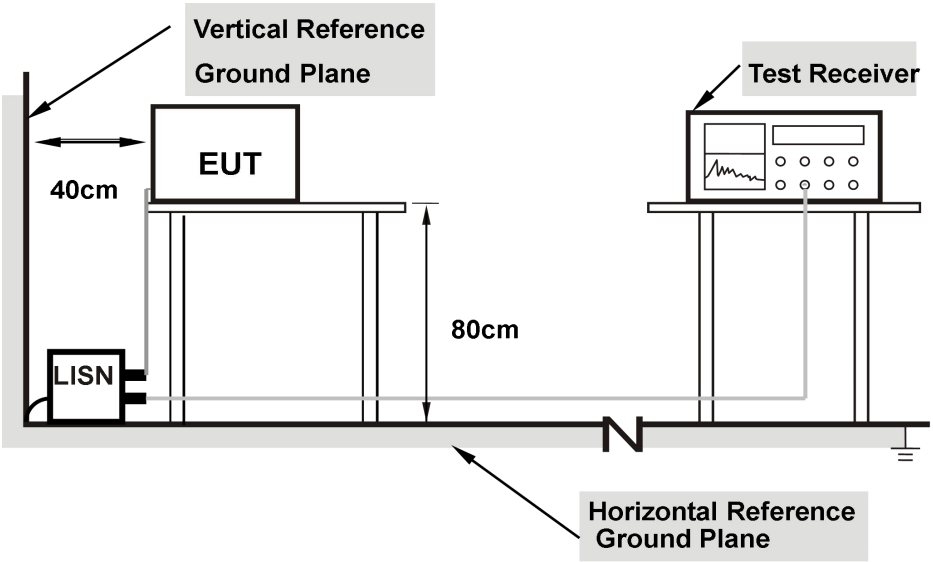

Note: 1.Support units were connected to second LISN.

2.Both of LISNs (AMN) are 80 cm from EUT and at least 80 from other units and other metal planes

3.4 TEST RESULTS

Temperature:	22.6 ℃	Relative Humidity:	54%
Test Voltage:	AC 120V/60Hz	Phase:	L
Test Mode:	Charging(worst mode)		

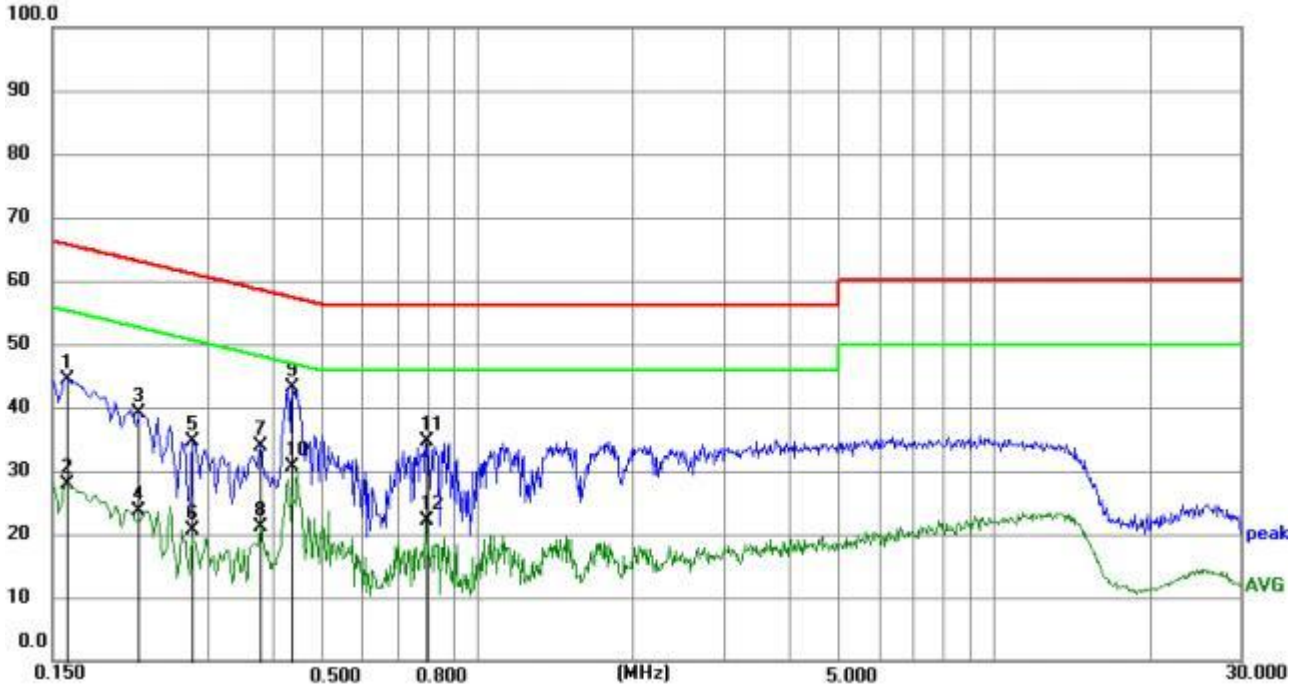

No.	Frequency (MHz)	Reading (dBuV)	Correct Factor(dB/m)	Result (dBuV/m)	Limit (dBuV/m)	Margin (dB)	Remark
1	0.1598	34.53	9.97	44.50	65.47	20.97	QP
2	0.1598	17.91	9.97	27.88	55.47	27.59	AVG
3	0.2220	29.13	9.88	39.01	62.74	23.73	QP
4	0.2220	13.83	9.88	23.71	52.74	29.03	AVG
5	0.2805	24.78	9.90	34.68	60.80	26.12	QP
6	0.2805	10.63	9.90	20.53	50.80	30.27	AVG
7	0.3795	24.07	9.89	33.96	58.29	24.33	QP
8	0.3795	11.30	9.89	21.19	48.29	27.10	AVG
9	0.4380	33.17	9.91	43.08	57.10	14.02	QP
10	0.4380	20.80	9.91	30.71	47.10	16.39	AVG
11	0.7934	24.83	9.91	34.74	56.00	21.26	QP
12	0.7934	12.18	9.91	22.09	46.00	23.91	AVG

Temperature:	22.6℃	Relative Humidity:	54%
Test Voltage:	AC 120V/60Hz	Phase:	N
Test Mode:	Charging(worst mode)		

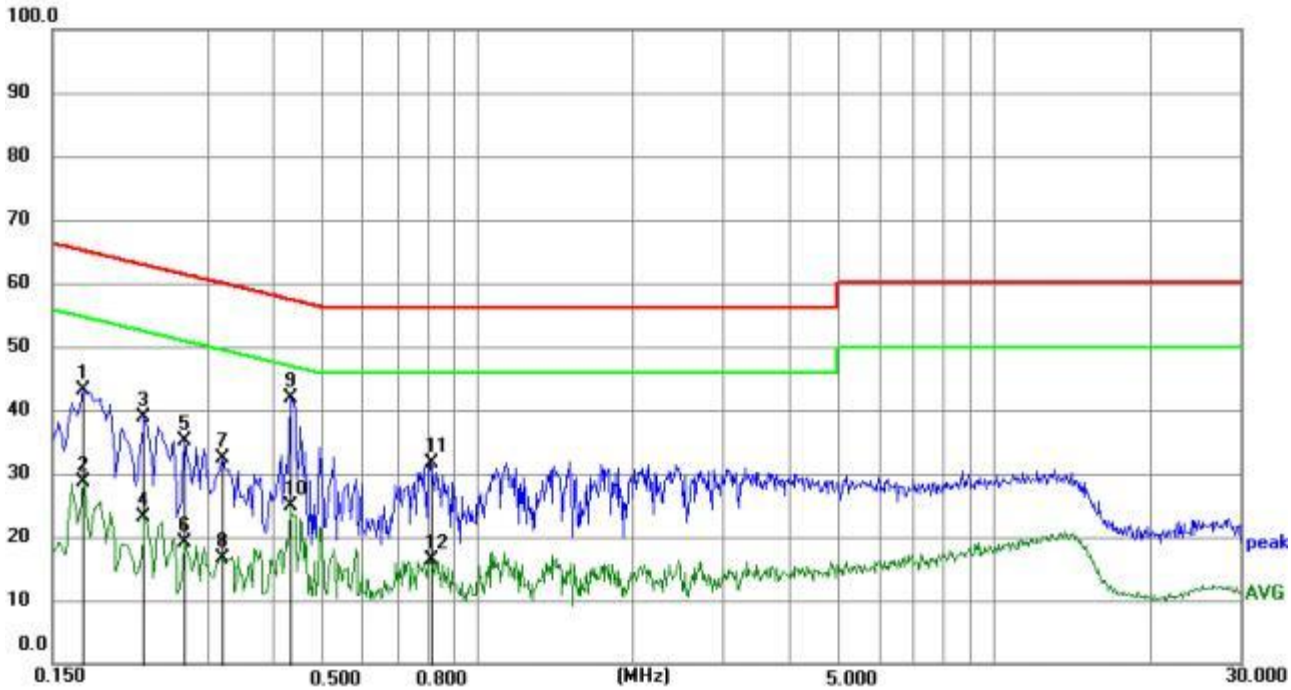

No.	Frequency (MHz)	Reading (dBuV)	Correct Factor(dB/m)	Result (dBuV/m)	Limit (dBuV/m)	Margin (dB)	Remark
1	0.1725	33.20	9.87	43.07	64.84	21.77	QP
2	0.1725	18.74	9.87	28.61	54.84	26.23	AVG
3	0.2265	29.12	9.83	38.95	62.58	23.63	QP
4	0.2265	13.39	9.83	23.22	52.58	29.36	AVG
5	0.2714	25.31	9.85	35.16	61.07	25.91	QP
6	0.2714	9.30	9.85	19.15	51.07	31.92	AVG
7	0.3209	22.49	9.87	32.36	59.68	27.32	QP
8	0.3209	6.85	9.87	16.72	49.68	32.96	AVG
9	0.4335	31.94	9.90	41.84	57.19	15.35	QP
10	0.4335	15.00	9.90	24.90	47.19	22.29	AVG
11	0.8115	21.59	9.96	31.55	56.00	24.45	QP
12	0.8115	6.51	9.96	16.47	46.00	29.53	AVG

4. RADIATED EMISSION MEASUREMENT

4.1 LIMIT

In any 100 kHz bandwidth outside the operating frequency band. In case the emission fall within the Restricted band specified on Part15.205(a)&209(a) limit in the table and according to ANSI C63.10-2020 below has to be followed

LIMITS OF RADIATED EMISSION MEASUREMENT (0.009mhz - 1000mhz)

Frequencies (MHz)	Field Strength (micorvolts/meter)	Measurement Distance (meters)
0.009~0.490	2400/F(KHz)	300
0.490~1.705	24000/F(KHz)	30
1.705~30.0	30	30
30~88	100	3
88~216	150	3
216~960	200	3
Above 960	500	3

LIMITS OF RADIATED EMISSION MEASUREMENT (1GHz-25 GHz)

FREQUENCY (MHz)	(dBuV/m) (at 3M)	
	PEAK	AVERAGE
Above 1000	74	54

LIMITS OF FIELD STRENGTH OF THE FUNDAMENTAL SIGNAL

FREQUENCY (MHz)	(dBuV/m) (at 3M)	
	PEAK	AVERAGE
2400-2483.5	114	94

Notes:
(1) The limit for radiated test was performed according to FCC PART 15C.
(2) The tighter limit applies at the band edges.
(3) Emission level (dBuV/m)=20log Emission level (uV/m).

4.2 TEST PROCEDURE

Spectrum Parameter	Setting
Attenuation	Auto
Detector	Peak/AV
Start Frequency	1000 MHz(Peak/AV)
Stop Frequency	10th carrier hamonic(Peak/AV)
RB / VB (emission in restricted band)	PK=1MHz / 1MHz, AV=1 MHz /10 Hz

a. The measuring distance of at 3 m shall be used for measurements at frequency 0.009MHz up to 1GHz,and above 1GHz.
b. The EUT was placed on the top of a rotating table 0.8 meters (above 1GHz is 1.5 m) above the ground at a 3 meter anechoic chamber test site. The table was rotated 360 degrees to determine the position of the highest radiation.
c. The height of the equipment shall be 0.8 m(above 1GHz is 1.5 m); the height of the test antenna shall vary between 1 m to 4 m. horizontal and vertical polarizations of the antenna are set to make the measurement.
d. The initial step in collecting conducted emission data is a spectrum analyzer peak detector mode pre-scanning the measurement frequency range. Significant peaks are then marked and then QuasiPeak detector mode re-measured.
e. If the Peak Mode measured value compliance with and lower than Quasi Peak Mode Limit, the EUT shall be deemed to meet QP Limits and then no additional QP Mode measurement performed.
f. For the actual test configuration, please refer to the related Item –EUT Test Photos.

Note:
Both horizontal and vertical antenna polarities were tested and performed pretest to three orthogonal axis. The worst case emissions were reported

4.3 TEST SETUP

（A）Radiated Emission Test-Up Frequency Below 30MHz

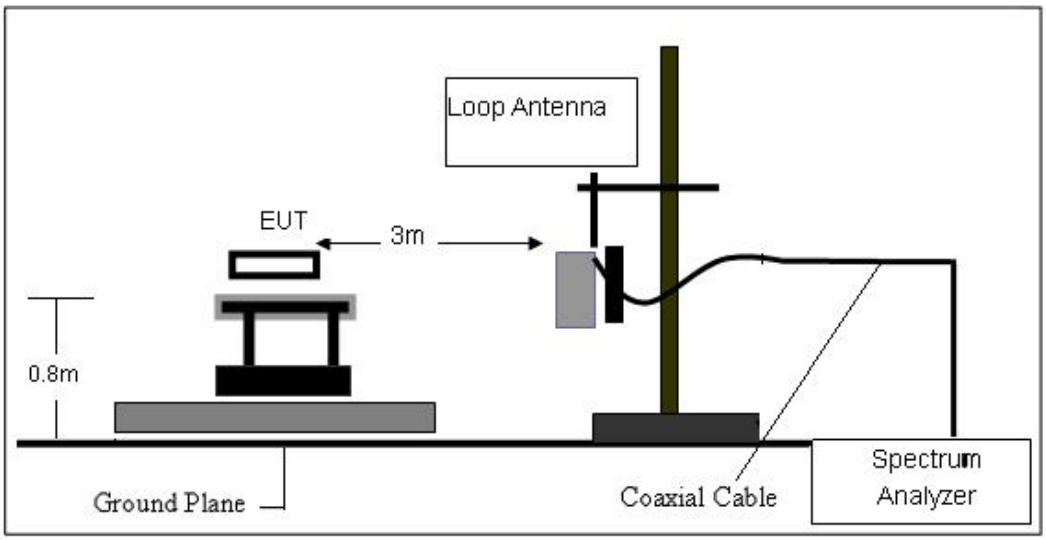

（B）Radiated Emission Test-Up Frequency 30MHz~1GHz

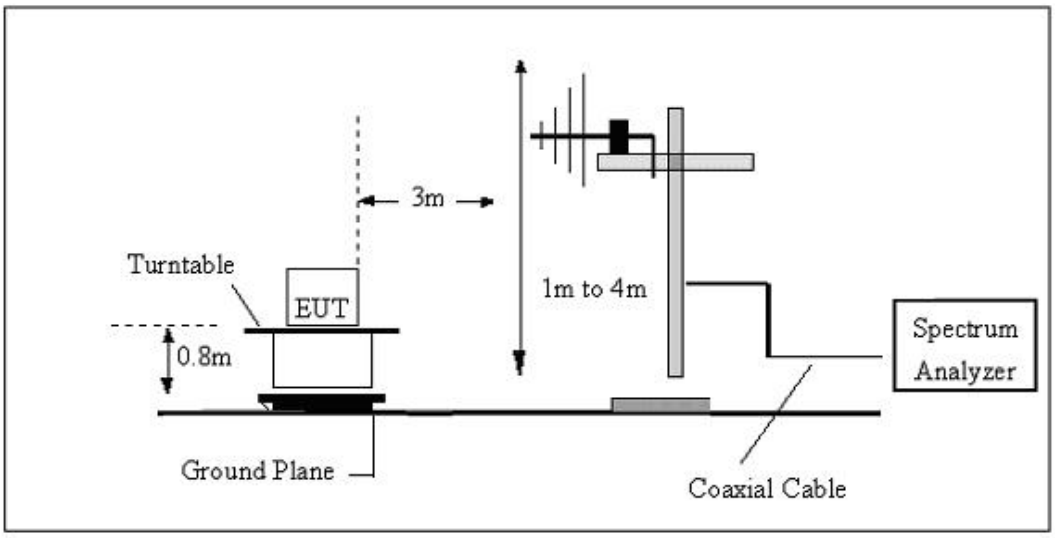

（C）Radiated Emission Test-Up Frequency Above 1GHz

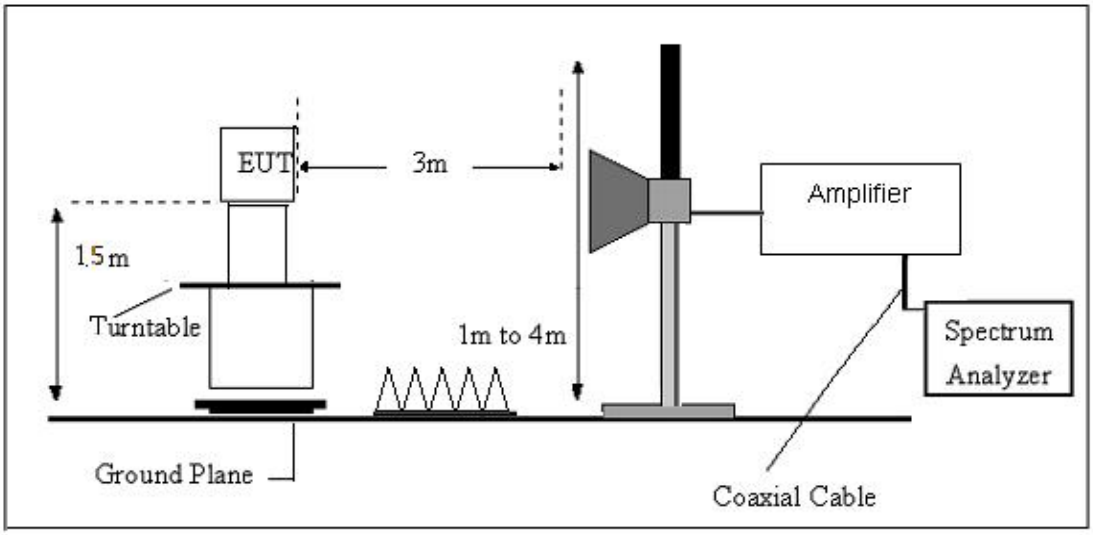

Temperature:	26℃	Relative Humidity:	54%
Test Voltage:	DC 3.7V	Test Mode:	GFSK

For field strength of the fundamental signal
Peak

No.	Frequency (MHz)	Reading (dBuV)	Antenna Factor (dB/m)	Cable Loss (dB)	Preamp Factor (dB/m)	Result (dBuV/m)	Limit (dBuV/m)	Margin (dB)	Remark
1	2402	92.15	27.58	5.39	30.18	94.94	114.00	-19.06	Horizontal
2	2402	91.82	27.58	5.39	30.18	94.61	114.00	-19.39	Vertical
3	2441	92.01	27.55	5.43	30.06	94.93	114.00	-19.07	Horizontal
4	2441	92.24	27.55	5.43	30.06	94.92	114.00	-19.08	Vertical
5	2478	92.08	27.52	5.47	29.93	95.14	114.00	-18.86	Horizontal
6	2478	91.97	27.52	5.47	29.93	95.03	114.00	-18.97	Vertical

Avg

No.	Frequency (MHz)	Reading (dBuV)	Antenna Factor (dB/m)	Cable Loss (dB)	Preamp Factor (dB/m)	Result (dBuV/m)	Limit (dBuV/m)	Margin (dB)	Remark
1	2402	72.32	27.58	5.39	30.18	75.11	94.00	-18.89	Horizontal
2	2402	69.7	27.58	5.39	30.18	72.49	94.00	-21.31	Vertical
3	2441	69.35	27.55	5.43	30.06	71.92	94.00	-19.43	Horizontal
4	2441	65.8	27.55	5.43	30.06	68.72	94.00	-22.68	Vertical
5	2478	65.44	27.52	5.47	29.93	68.5	94.00	-20.96	Horizontal
6	2478	63.43	27.52	5.47	29.93	66.49	94.00	-26.32	Vertical

For spurious emission

(9KHz-30MHz)

Freq.	Reading	Limit	Margin	State	Test Result
(MHz)	(dBuV/m)	(dBuV/m)	(dB)	P/F	
--	--	--	--	--	PASS
--	--	--	--	--	PASS

Note:
The amplitude of spurious emissions which are attenuated by more than 20dB below the permissible value has no need to be reported.
Distance extrapolation factor =40 log (specific distance/test distance)(dB);
Limit line = specific limits (dBuv) + distance extrapolation factor.

(30MHz-1000MHz)

Temperature:	26℃	Relative Humidity:	54%
Test Voltage:	DC 3.7V	Phase:	Horizontal
Test Mode:	GFSK		

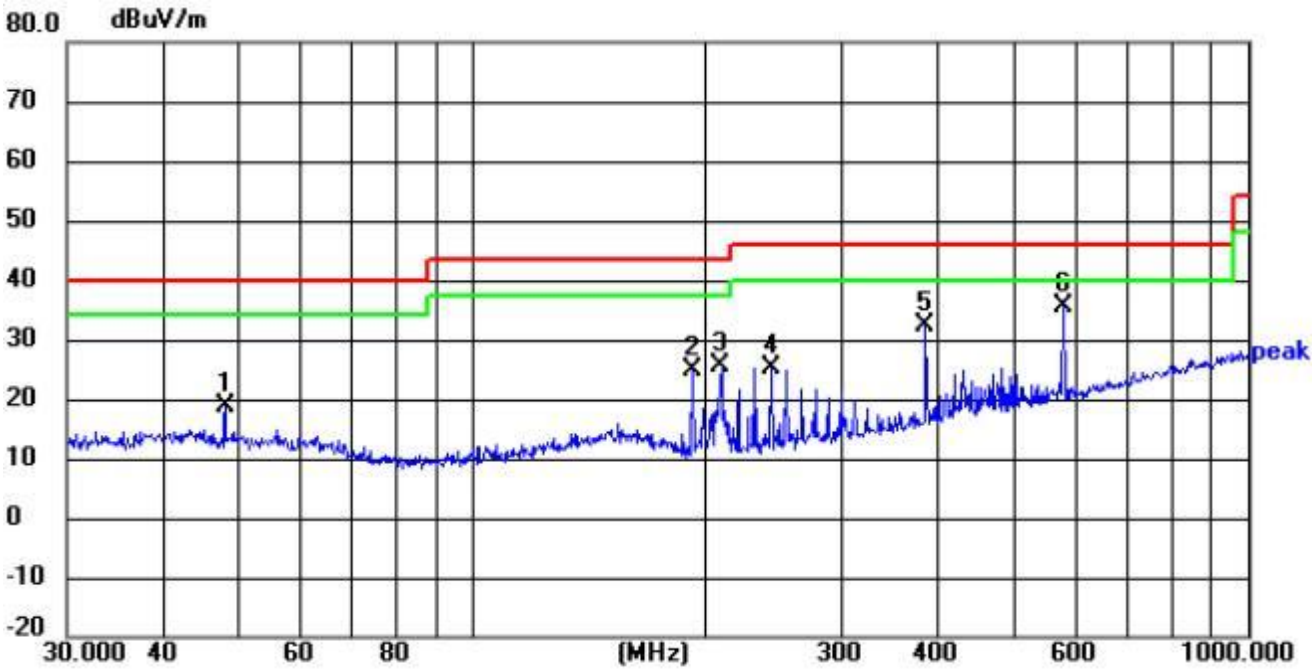

No.	Frequency	Reading	Correct	Result	Limit	Margin	Remark
	(MHz)	(dBuV)	Factor(dB/m)	(dBuV/m)	(dBuV/m)	(dB)	
1	47.9940	30.96	-12.20	18.76	40.00	-21.24	QP
2	191.7450	39.46	-14.78	24.68	43.50	-18.82	QP
3	209.3129	40.31	-14.79	25.52	43.50	-17.98	QP
4	242.5253	38.41	-13.27	25.14	46.00	-20.86	QP
5	383.9318	42.11	-9.79	32.32	46.00	-13.68	QP
6	576.6443	41.16	-5.46	35.70	46.00	-10.30	QP

Note: 1. level= Reading level+ Factor, Margin=Measurement-Limit

Temperature:	26℃	Relative Humidity:	54%
Test Voltage:	DC 3.7V	Phase:	Vertical
Test Mode:	GFSK		

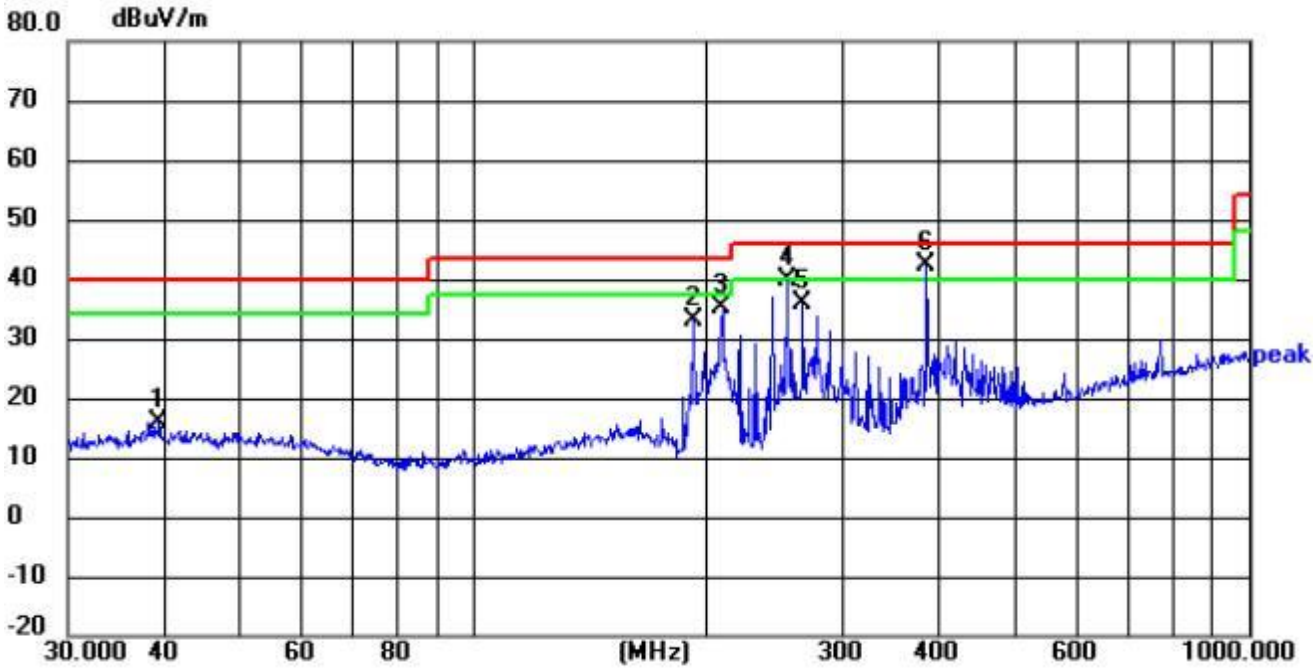

No.	Frequency	Reading	Correct	Result	Limit	Margin	Remark
	(MHz)	(dBuV)	Factor(dB/m)	(dBuV/m)	(dBuV/m)	(dB)	
1	39.2991	27.59	-11.67	15.92	40.00	-24.08	QP
2	191.7450	47.87	-14.78	33.09	43.50	-10.41	QP
3	209.3129	49.99	-14.79	35.20	43.50	-8.30	QP
4	253.8367	53.00	-13.05	39.95	46.00	-6.05	QP
5	265.6757	48.69	-12.71	35.98	46.00	-10.02	QP
6	383.9318	52.26	-9.79	42.47	46.00	-3.53	QP

Note: 1. level= Reading level+ Factor, Margin=Measurement-Limit

(1GHz~25GHz)

Low CH, Peak

Frequency (MHz)	Reading (dBuV)	Antenna Factor (dB/m)	Cable Loss (dB)	Preamp Factor (dB/m)	Result (dBuV/m)	Limit (dBuV/m)	Margin (dB)	Remark
4804.00	36.62	31.78	8.6	32.09	44.91	74	-29.09	Vertical
7206.00	34.61	36.15	11.65	32	50.41	74	-23.59	Vertical
9608.00	35.49	37.95	14.14	31.62	55.96	74	-18.04	Vertical
12010.00	*					74		Vertical
14412.00	*					74		Vertical
4804.00	39.22	31.78	8.6	32.09	47.51	74	-26.49	Horizontal
7206.00	34.41	36.15	11.65	32	50.21	74	-23.79	Horizontal
9608.00	33.54	37.95	14.14	31.62	54.01	74	-19.99	Horizontal
12010.00	*					74		Horizontal
14412.00	*					74		Horizontal

Low CH, AV

Frequency (MHz)	Reading (dBuV)	Antenna Factor (dB/m)	Cable Loss (dB)	Preamp Factor (dB/m)	Result (dBuV/m)	Limit (dBuV/m)	Margin (dB)	Remark
4804.00	29.32	31.78	8.6	32.09	37.61	54	-16.39	Vertical
7206.00	21.46	36.15	11.65	32	37.26	54	-16.74	Vertical
9608.00	20.2	37.95	14.14	31.62	40.67	54	-13.33	Vertical
12010.00	*					54		Vertical
14412.00	*					54		Vertical
4804.00	33.34	31.78	8.6	32.09	41.63	54	-12.37	Horizontal
7206.00	23.28	36.15	11.65	32	39.08	54	-14.92	Horizontal
9608.00	20.39	37.95	14.14	31.62	40.86	54	-13.14	Horizontal
12010.00	*					54		Horizontal
14412.00	*					54		Horizontal

The amplitude of spurious emissions which are attenuated more than 20 dB below the limits are not reported.

Middle Peak

Frequency (MHz)	Reading (dBuV)	Antenna Factor (dB/m)	Cable Loss (dB)	Preamp Factor (dB/m)	Result (dBuV/m)	Limit (dBuV/m)	Margin (dB)	Remark
4880	38.1	31.85	8.67	32.12	46.5	74	-27.5	Vertical
7320	32.31	36.37	11.72	31.89	48.51	74	-25.49	Vertical
9704	32.38	38.35	14.25	31.62	53.36	74	-20.64	Vertical
12130	*					74		Vertical
14556	*					74		Vertical
4852	42.52	31.85	8.67	32.12	50.92	74	-23.08	Horizontal
7278	34.21	36.37	11.72	31.89	50.41	74	-23.59	Horizontal
9704	34.29	38.35	14.25	31.62	55.27	74	-18.73	Horizontal
12130	*					74		Horizontal
14556	*					74		Horizontal

Middle AV

Frequency (MHz)	Reading (dBuV)	Antenna Factor (dB/m)	Cable Loss (dB)	Preamp Factor (dB/m)	Result (dBuV/m)	Limit (dBuV/m)	Margin (dB)	Remark
4852	27.38	31.85	8.67	32.12	35.78	54	-18.22	Vertical
7278	22.31	36.37	11.72	31.89	38.51	54	-15.49	Vertical
9704	18.4	38.35	14.25	31.62	39.38	54	-14.62	Vertical
12130	*					54		Vertical
14556	*					54		Vertical
4852	29.67	31.85	8.67	32.12	38.07	54	-15.93	Horizontal
7278	23.14	36.37	11.72	31.89	39.34	54	-14.66	Horizontal
9704	22.26	38.35	14.25	31.62	43.24	54	-10.76	Horizontal
12130	*					54		Horizontal
14556	*					54		Horizontal

The amplitude of spurious emissions which are attenuated more than 20 dB below the limits are not reported.

High Peak

Frequency (MHz)	Reading (dBuV)	Antenna Factor (dB/m)	Cable Loss (dB)	Preamp Factor (dB/m)	Result (dBuV/m)	Limit (dBuV/m)	Margin (dB)	Remark
4926	35.34	31.93	8.73	32.16	43.84	74	-30.16	Vertical
7389	34.16	36.59	11.79	31.78	50.76	74	-23.24	Vertical
9852	34.55	38.81	14.38	31.88	55.86	74	-18.14	Vertical
12315	*					74		Vertical
14778	*					74		Vertical
4926	39.91	31.93	8.73	32.16	48.41	74	-25.59	Horizontal
7389	35.7	36.59	11.79	31.78	52.3	74	-21.7	Horizontal
9852	33.28	38.81	14.38	31.88	54.59	74	-19.41	Horizontal
12315	*					74		Horizontal
14778	*					74		Horizontal

High AV

Frequency (MHz)	Reading (dBuV)	Antenna Factor (dB/m)	Cable Loss (dB)	Preamp Factor (dB/m)	Result (dBuV/m)	Limit (dBuV/m)	Margin (dB)	Remark
4926	25.41	31.93	8.73	32.16	33.91	54	-20.09	Vertical
7389	19.52	36.59	11.79	31.78	36.12	54	-17.88	Vertical
9852	18.64	38.81	14.38	31.88	39.95	54	-14.05	Vertical
12315	*					54		Vertical
14778	*					54		Vertical
4926	33.86	31.93	8.73	32.16	42.36	54	-11.64	Horizontal
7389	23.8	36.59	11.79	31.78	40.4	54	-13.6	Horizontal
9852	21.02	38.81	14.38	31.88	42.33	54	-11.67	Horizontal
12315	*					54		Horizontal
14778	*					54		Horizontal

The amplitude of spurious emissions which are attenuated more than 20 dB below the limits are not reported.

5. BAND EDGE TEST

5.1 LIMIT

According to §15.249(d), Emissions radiated outside of the specified frequency bands, except for harmonics, shall be attenuated by at least 50 dB below the level of the fundamental or to the general radiated emission limits in §15.209, whichever is the lesser attenuation.

5.2 TEST PROCEDURE

a. The EUT is placed on a turntable, which is 1.5m above ground plane.

b. EUT is set 3m away from the receiving antenna, which is varied from 1m to 4m to find out the highest emissions.

c. Use the following spectrum analyzer settings:
Span = wide enough to fully capture the emission being measured, RBW = 1 MHz, VBW ≥ RBW, Sweep = auto, Detector function = peak, Trace = max hold
Follow the guidelines in ANSI C63.4 with respect to maximizing the emission by rotating the EUT, adjusting the measurement antenna height and polarization, etc.

d. The peak reading of the emission, after being corrected by the antenna factor, cable loss, pre-amp gain, etc., is the peak field strength, submit this data. Each emission was to be maximized by changing the polarization of receiving antenna both horizontal and vertical.

e. Set the VBW to 10 Hz, while maintaining all of the other instrument settings. This peak level, once corrected, must comply with the limit specified in Section 15.209. If the duty cycle per channel of the hopping signal is less than 100 ms, then the reading obtained with the 10 Hz VBW may be further adjusted by a “duty cycle correction factor”, derived from 20log(duty cycle/100 ms), in an effort to demonstrate compliance with the 15.209 limit. Submit this data.

5.3 TEST SETUP

Radiated Emission Test-Up Frequency Above 1GHz

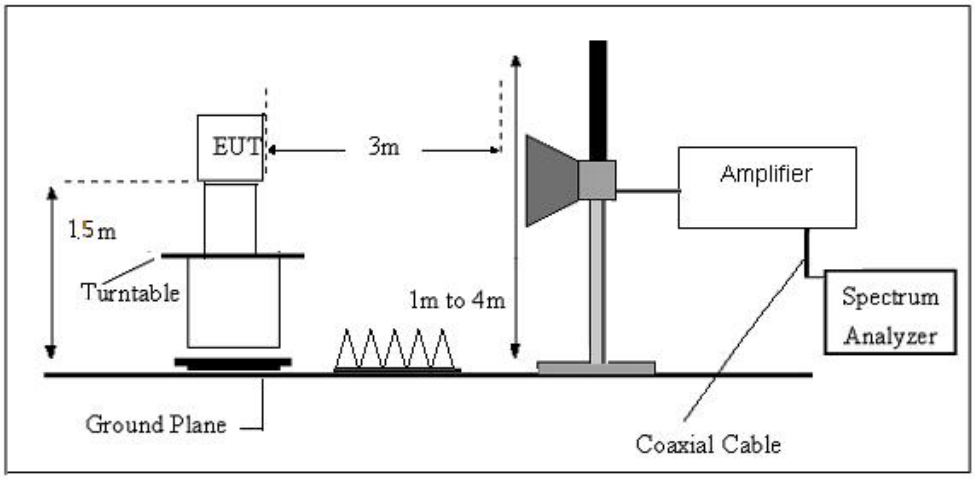

5.4 TEST RESULTS

Low CH (GFSK)

Peak

Frequency (MHz)	Read Level (dBuV)	Antenna Factor (dB/m)	Cable Loss (dB)	Preamp Factor (dB)	Level (dBuV/m)	Limit Line (dBuV/m)	Over Limit (dB)	Polarization
2310.00	40.26	27.61	5.36	30.18	43.05	74	-30.95	Horizontal
2390.00	39.28	27.59	5.38	30.18	42.07	74	-31.93	Horizontal
2400.00	54.4	27.58	5.39	30.18	57.19	74	-16.81	Horizontal
2310.00	37.29	27.61	5.36	30.18	40.08	74	-33.92	Vertical
2390.00	40.48	27.59	5.38	30.18	43.27	74	-30.73	Vertical
2400.00	45.41	27.58	5.39	30.18	48.2	74	-25.8	Vertical

Avg

Frequency (MHz)	Read Level (dBuV)	Antenna Factor (dB/m)	Cable Loss (dB)	Preamp Factor (dB)	Level (dBuV/m)	Limit Line (dBuV/m)	Over Limit (dB)	Polarization
2310.00	34.2	27.61	5.36	30.18	36.99	54	-17.01	Horizontal
2390.00	29.31	27.59	5.38	30.18	32.1	54	-21.9	Horizontal
2400.00	42.86	27.58	5.39	30.18	45.15	54	-8.85	Horizontal
2310.00	34.01	27.61	5.36	30.18	36.8	54	-17.2	Vertical
2390.00	31.95	27.59	5.38	30.18	34.74	54	-19.26	Vertical
2400.00	40.69	27.58	5.39	30.18	43.48	54	-10.52	Vertical

High CH(GFSK)

Peak

Frequency (MHz)	Read Level (dBuV)	Antenna Factor (dB/m)	Cable Loss (dB)	Preamp Factor (dB)	Level (dBuV/m)	Limit Line (dBuV/m)	Over Limit (dB)	Polarization
2483.50	39.21	27.53	5.47	29.93	42.28	74	-31.72	Horizontal
2500.00	41.27	27.55	5.49	29.93	44.38	74	-29.62	Horizontal
2483.50	44	27.53	5.47	29.93	47.07	74	-26.93	Vertical
2500.00	40.71	27.55	5.49	29.93	43.82	74	-30.18	Vertical

Avg

Frequency (MHz)	Read Level (dBuV)	Antenna Factor (dB/m)	Cable Loss (dB)	Preamp Factor (dB)	Level (dBuV/m)	Limit Line (dBuV/m)	Over Limit (dB)	Polarization
2483.50	34.27	27.53	5.47	29.93	37.34	54	-16.66	Horizontal
2500.00	33.1	27.55	5.49	29.93	36.21	54	-17.79	Horizontal
2483.50	35.34	27.53	5.47	29.93	38.41	54	-15.59	Vertical
2500.00	30.59	27.55	5.49	29.93	33.7	54	-20.3	Vertical

Remark.
1.Final Level =Receiver Read level + Antenna Factor + Cable Loss - Preamplifier Factor
2.The amplitude of spurious emissions which are attenuated more than 20 dB below the limits are not reported.
3.All restriction band have been tested, and only the worst case is shown in report

6. 20 DB BANDWIDTH TEST

6.1 LIMIT

According to 15.215 (c) Intentional radiators operating under the alternative provisions to the general emission limits, as contained in § 15.217 through 15.257 and in Subpart E of this part, must be designed to ensure that the 20 dB bandwidth of the emission, or whatever bandwidth may otherwise be specified in the specific rule section under which the equipment operates, is contained within the frequency band designated in the rule section under which the equipment is operated. The requirement to contain the designated bandwidth of the emission within the specified frequency band includes the effects from frequency sweeping, frequency hopping and other modulation techniques that may be employed as well as the frequency stability of the transmitter over expected variations in temperature and supply voltage. If a frequency stability is not specified in the regulations, it is recommended that the fundamental emission be kept within at least the central 80% of the permitted band in order to minimize the possibility of out-of-band operation

6.2 TEST PROCEDURE

a. Check the calibration of the measuring instrument using either an internal calibrator or a known signal from an external generator

b. Position the EUT without connection to measurement instrument. Turn on the EUT and connect it to measurement instrument. Then set it to any one convenient frequency within its operating range. Set a reference level on the measuring instrument equal to the highest peak value.

c. Measure the frequency difference of two frequencies that were attenuated 20 dB from the reference level. Record the frequency difference as the emission bandwidth.

6.3 TEST SETUP

6.4 TEST RESULTS

Temperature:	25℃	Relative Humidity:	50%
Test Mode:	GFSK	Test Voltage:	DC 3V

Frequency	20dB Bandwidth (MHz)	99% Bandwidth (MHz)	Result
2402 MHz	1.201	1.0911	PASS
2441 MHz	1.201	1.0915	PASS
2478 MHz	1.202	1.0936	PASS

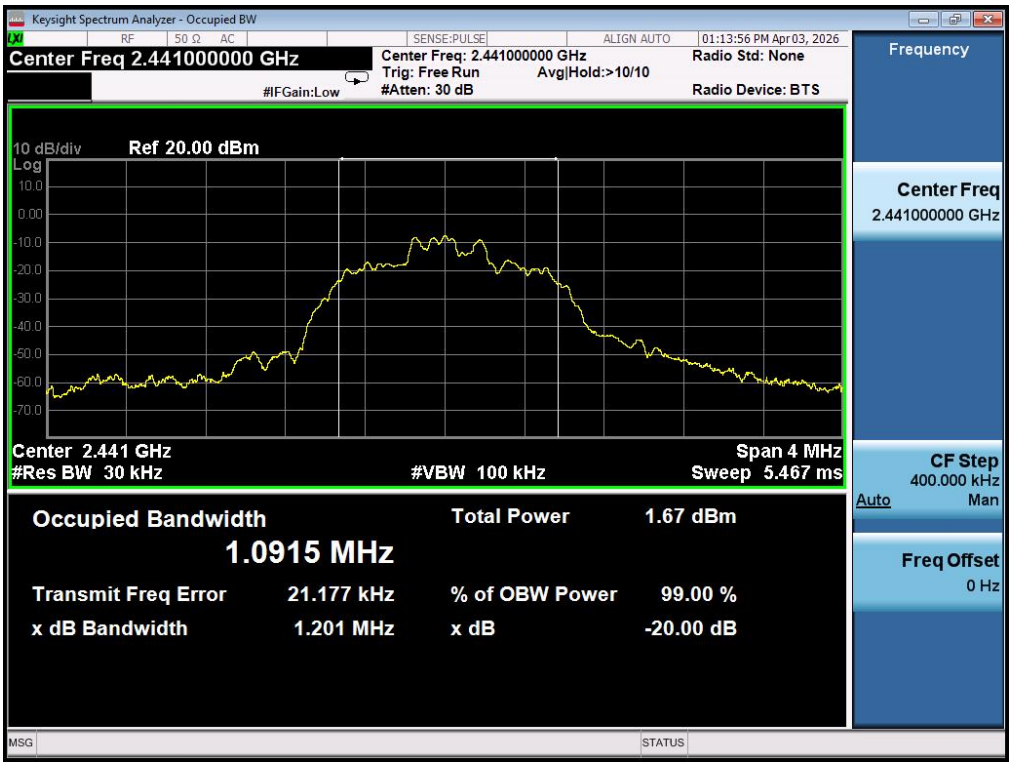
Keysight Spectrum Analyzer - Occupied BW
RF 50 Ω AC
SENSE:PULSE
ALIGN AUTO
01:13:56 PM Apr 03, 2026
Center Freq 2.441000000 GHz
Center Freq: 2.441000000 GHz
Trig: Free Run
Avg|Hold:>10/10
#Atten: 30 dB
#IFGain:Low
Radio Std: None
Radio Device: BTS
Frequency
10 dB/div
Ref 20.00 dBm
Log
10.0
0.00
-10.0
-20.0
-30.0
-40.0
-50.0
-60.0
-70.0
Center 2.441 GHz
#Res BW 30 kHz
#VBW 100 kHz
Span 4 MHz
Sweep 5.467 ms
Center Freq
2.441000000 GHz
CF Step
400.000 kHz
Auto
Man
Occupied Bandwidth
1.0915 MHz
Total Power 1.67 dBm
Transmit Freq Error 21.177 kHz
% of OBW Power 99.00 %
x dB Bandwidth 1.201 MHz
x dB -20.00 dB
Freq Offset
0 Hz
MSG
STATUS

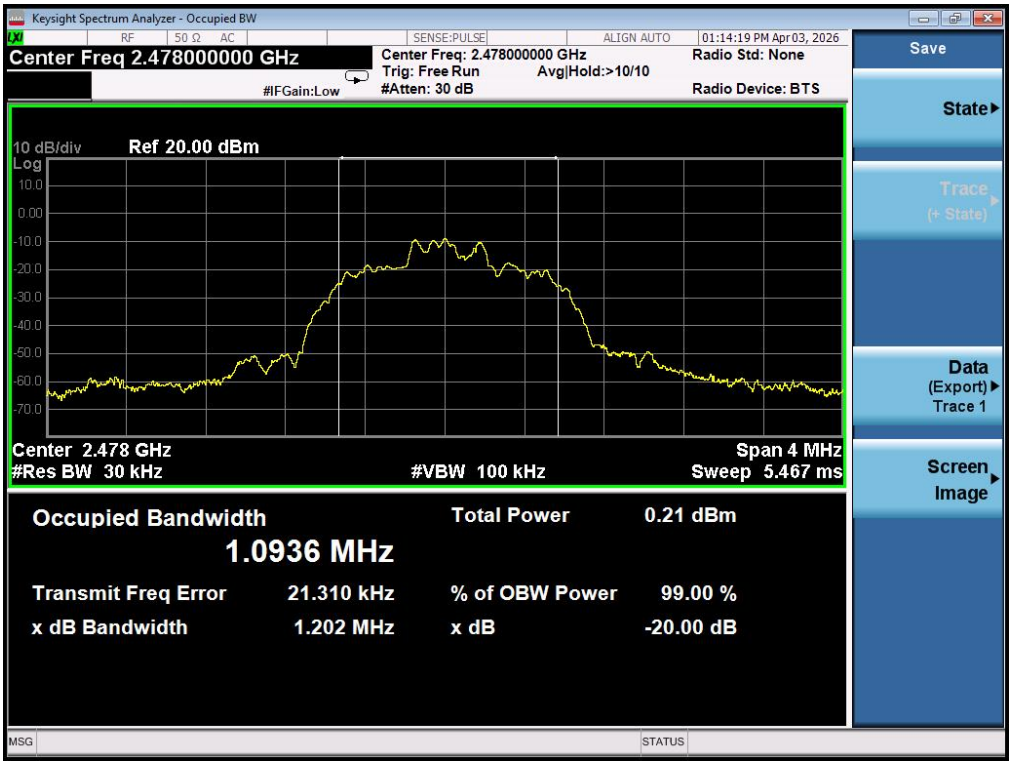
Keysight Spectrum Analyzer - Occupied BW
RF 50 Ω AC
SENSE:PULSE
ALIGN AUTO
01:14:19 PM Apr 03, 2026
Center Freq 2.478000000 GHz
Center Freq: 2.478000000 GHz
Trig: Free Run
Avg|Hold:>10/10
#Atten: 30 dB
#IFGain:Low
Radio Std: None
Radio Device: BTS
Save
State
Trace
(+ State)
10 dB/div
Ref 20.00 dBm
Log
10.0
0.00
-10.0
-20.0
-30.0
-40.0
-50.0
-60.0
-70.0
Data
(Export)
Trace 1
Center 2.478 GHz
#Res BW 30 kHz
#VBW 100 kHz
Span 4 MHz
Sweep 5.467 ms
Screen
Image
Occupied Bandwidth
1.0936 MHz
Total Power 0.21 dBm
Transmit Freq Error 21.310 kHz
% of OBW Power 99.00 %
x dB Bandwidth 1.202 MHz
x dB -20.00 dB
MSG
STATUS

7. ANTENNA REQUIREMENT

7.1 STANDARD REQUIREMENT

15.203 requirement: For intentional device, according to 15.203: an intentional radiator shall be designed to ensure that no antenna other than that furnished by the responsible party shall be used with the device.

7.2 EUT ANTENNA

The antennas used for this product are PCB antenna and other than that furnished by the responsible party shall be used with the device, the maximum peak gain of the transmit antenna is 0dBi.

※※※※※END OF THE REPORT※※※※※