AGILE ROBOTS

Connecting Artificial Intelligence
to the Physical World

Thor series robot

Document version: V1.0.2

PRODUCT MANUAL

Contents

1. SAFETY - 1 -
1.1. SAFETY REGULATIONS - 1 -
1.2. SAFETY SIGNS - 3 -
1.3. PERSONNEL REQUIREMENTS - 4 -
1.4. PRECAUTIONS - 5 -
1.5. EMERGENCY STOP - 8 -
2. INTENDED USE AND PLACEMENT CONDITIONS - 9 -
3. ROBOT SYSTEM - 11 -
4. TECHNICAL SPECIFICATIONS - 12 -
4.1. TECHNICAL SPECIFICATIONS - 12 -
4.2. ROBOT ARM DIMENSIONS - 14 -
4.3. CONTROLLER DIMENSIONS - 16 -
5. INSTALLATION - 17 -
5.1. ROBOT ARM MOUNTING AND FIXATION - 17 -
5.2. END-EFFECTOR MOUNTING AND FIXATION - 18 -
6. CONTROLLER ELECTRICAL INTERFACES - 21 -
7. TRANSPORT - 22 -
8. FCC STATEMENT - 23 -
9. DISCLAIMER - 24 -

1. Safety

1.1. Safety Regulations

The information in this manual does not include the design, installation, and operation of a complete robot integration system, nor does it include all peripheral devices that may affect the safety of such a system. The design and installation of the complete system must comply with the safety requirements established by the standards and regulations of the country where the robot is used.

In particular, Agile Robots is not responsible for any injury or damage caused by any of the following reasons:

- Use this product for purposes other than those specified.
- Failure to use the robot as prescribed.
- Operating the robot when safety devices are defective or not functioning properly.
- Unauthorized modifications to the robot design.
- Repairs of the robot or its parts performed by inexperienced or unqualified personnel.
- Installation of non-original parts or accessories.
- Natural disasters such as fire, earthquake, tsunami, lightning, strong winds, or floods.

The integrator of Agile Robots is responsible for ensuring compliance with relevant national laws and regulations, and for ensuring that no significant hazards exist in the complete robot integration system. This includes but is not limited to the following:

- Conduct a comprehensive risk assessment of the entire robot integration system.
- Connect other machinery and additional safety devices defined in the

risk assessment to the robot integration system for coordinated use.

- Perform appropriate safety settings in the software.
- Ensure that users do not modify any safety measures.
- Verify that the design and settings of the entire robot integration system are accurate.
- Create operational specifications for the complete system, with clear usage process descriptions.
- Use appropriate methods during final installation to eliminate hazards or reduce them to an acceptable level, and communicating any residual risks to the end user.
- Provide training to users and staff.
- Mark the relevant equipment of the robot integration system with the integrator's relevant identification and contact information.

When performing a risk assessment, the integrator shall consider the following potential risks:

- Consequences of end-effector dropping from the robot
- Consequences of the robot colliding with other equipment within the workspace
- Consequences of personnel tripping due to improper on-site cable management
- Scratches caused by contact with the robot

Only personnel with the appropriate qualifications may handle and set up the robot and related machinery. In addition, all relevant national laws and regulations must be strictly observed. Before use, user shall carefully read this manual and related instructions, and operate the robot correctly. After reading, keep the manual properly for future reference.

Any safety information contained in this manual shall not be regarded as a

guarantee of the robot's safety. Even if all safety instructions are followed, the robot may still cause injury or damage.

1.2. Safety Signs

Certain symbols are used in the text to indicate important matters. Their meanings are as follows:

Danger	❑ A symbol used to indicate an imminent hazardous situation which, if not avoided, will result in serious personal injury.
Warning	❑ A symbol used to indicate a potential hazardous situation which, if not avoided, could result in serious personal injury.
Electric shock	❑ A symbol used to indicate a potential hazardous situation related to electrical danger which, if not avoided, could result in serious personal injury.
Caution	❑ A symbol used to indicate a potential hazardous situation which, if not avoided, could result in minor personal injury.
Notice	❑ A symbol used to indicate important facts and conditions.

1.3. Personnel Requirements

Only personnel who have received appropriate training may design and set up the robot. Appropriately trained personnel refers to those who have received training provided by the company or its agents, covering electrical, mechanical, and other hazards identified in the risk assessment.

Personnel under the influence of alcohol, medication, or other intoxicating substances must not install, maintain, repair, or operate the robot.

Personnel must have received training on the robot as well as on responses to emergencies or abnormal situations.

Personnel must not wear loose clothing, and long hair must be properly tied back to reduce the risk of entanglement.

Use personal protective equipment correctly.

1.4. Precautions

Personnel involved in design and setup must observe the following safety precautions.

Warning	❑ Personnel responsible for designing and configuring the robot with this product must first read the "Precautions" section in the user manual. If the robot is designed or configured without understanding the safety precautions, it may result in serious injury or significant damage, which is extremely dangerous. ❑ Please use the robot and controller under the environmental conditions specified in each manual. If used in an environment that does not meet these conditions, it may shorten the product's service life and cause serious safety issues. ❑ Use the robot only within the specified specifications. Operating the product outside its specifications may not only shorten its service life but also cause serious safety issues. ❑ When wiring, always ensure that safety-related input signals, such as emergency stop and protective stop, can function properly. ❑ After assigning functions to the I/O through mapping, pay attention to the following points during use. Operating under conditions that do not meet the requirements may result in system failures or safety issues. ➢ Before powering on, always confirm the correspondence between functions and wiring. ➢ If the robot performs abnormal operations due to incorrect settings or wiring, immediately press the Emergency stop switch or equivalent to stop the robot's motion.

Danger	❑ The installation and commissioning of the robot must be performed by professional operators in accordance with this manual and relevant standards.
Electric shock	❑ Except for maintenance work, do not open the cover of the controller. There are high-voltage areas inside the controller. Even when the power is turned off, there is still a risk of electric shock. Always wait at least 30 seconds after shutting off the power before opening the controller cover. ❑ Always connect or disconnect cables with the controller power turned off. Performing this operation with the power on poses a risk of electric shock or may cause malfunctions. ❑ Securely connect the cables. Do not place heavy objects on the cables, excessively bend them, pull them forcibly, or pinch them. Otherwise, the cables may be damaged, broken, or have poor contact, which could result in abnormal robot operation or electric shock. ❑ Power plugs for the factory must be installed by personnel with professional knowledge and skills. When installing the power plug, always connect the ground wire of the AC power cable to the grounding terminal of the distribution system. Failure to properly connect the ground wire may result in electric shock.

Personnel engaged in operation and maintenance must observe the following safety precautions.

Warning	❑ Do not enter the robot's operating area while the power is on. Even if the robot appears to have stopped, it may still move, which is extremely dangerous and could cause serious safety issues. ❑ When manually controlling the robot with a teach pendant (including a software teach pendant), the operator must carefully monitor the robot's movements. ❑ Ensure that the end-effector is firmly installed. After installation, check its mounting condition. ❑ Ensure that operators are familiar with the location of the Emergency stop switch, as well as the startup and recovery methods. If the robot operates abnormally, immediately press the Emergency stop switch. ❑ Ensure that the robot's installation angle, end-effector weight, center-of-gravity offset, and safety configurations match the current operating conditions. ❑ Before using the robot for the first time, check the integrity of the robot system, equipment, safety functions, and the appropriateness of the corresponding settings. ❑ Before using the robot for the first time, conduct a new risk assessment and keep the relevant records. ❑ When the robot works in coordination with other equipment, it is recommended to set up a temporary testing area outside the equipment workspace and first perform independent testing and verification of the robot's safety functions and programming within that area.

Danger	❑ If the robot performs abnormal actions during operation, immediately press the Emergency stop switch. Continuing to operate the robot during abnormal motion may result in serious injury or major damage, and is extremely dangerous.
Electric shock	❑ Except for maintenance work, do not open the cover of the controller. There are high-voltage areas inside the controller. Even when the power is turned off, there is still a risk of electric shock. Always wait at least 30 seconds after shutting off the power before opening the controller cover. ❑ Do not connect or disconnect connectors while the power is on. Doing so may cause abnormal robot operation, which is extremely dangerous. In addition, performing this operation with the power on may result in electric shock or malfunction. ❑ Do not arbitrarily modify the robot's hardware configuration. Any unauthorized modifications may cause unforeseeable potential hazards. Agile Robots assumes no responsibility for any unauthorized modifications made to the robot in any form.

1.5. Emergency Stop

If any abnormal situation occurs during robot operation, the user must immediately press the Emergency stop switch to halt robot motion. Before restarting the robot, verify that all faults have been completely resolved.

When the Emergency stop switch is pressed, the robot's servo system power will be cut off and the joint brakes will be engaged. The Emergency stop switch is intended only for use in hazardous situations. In normal operation, to stop the robot, the stop button in the control software system must be used.

The emergency stop function is a supplementary protective measure and must not replace other safeguards and safety functions.

2. Intended Use and Placement Conditions

Agile Robots' robotic products are designed for industrial applications, intended for manipulating tools and fixtures, or for processing and transferring parts and products. Any application outside the intended use is not permitted, including but not limited to the following:

- Use in potentially explosive environments.
- Use in medical or life-critical applications.
- Use in applications involving direct contact with food, beverages, or pharmaceutical products.
- Use in applications involving the movement or handling of people or animals.
- Use in applications that have a significant impact on society or the public.
- Use as climbing equipment.
- Before performing the risk assessment.
- Use beyond the specified limits.
- Operation outside the permitted parameter settings.

To maintain the functionality of the robot and ensure safe use, an appropriate environment is required. Place the controller in a location that meets the following conditions:

- The controller is not of cleanroom-grade specification. When installed in a cleanroom, take appropriate measures to make it suitable for the cleanroom environment, such as covering the controller with a housing equipped with exhaust or cooling structures.
- Place the controller near a power socket in a location where the plug can be easily attached and detached.
- Install it indoors in a well-ventilated area, leaving at least 50 mm of

clearance around the controller fan to ensure smooth airflow.

- Protected from direct sunlight and radiant heat.
- Free from oil mist, smoke, salt, metal dust, or similar contaminants in the air.
- Kept away from flammable or corrosive liquids and gases.
- Protected from impacts and vibrations.
- Not located near relays, contactors, or other sources of electrical interference, and not exposed to strong magnetic or electric fields.

3. Robot System

A complete robot system consists of a robot arm, a controller, and a teach pendant, as shown below.

Thor series robot:

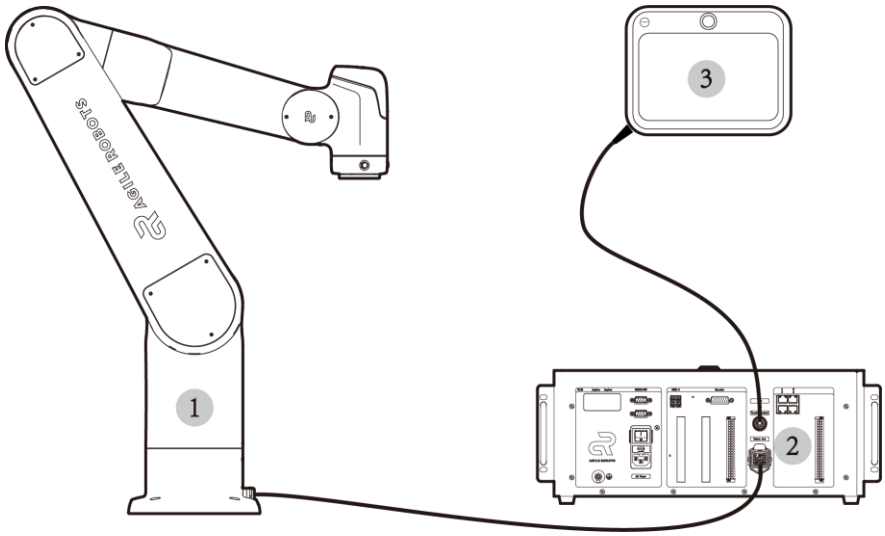

1	Robot arm	3	Teach pendant
2	Controller	-	-

4. Technical Specifications

4.1. Technical Specifications

Robot Arm	Specification			
Model	Thor7	Thor7 Pro	Thor12	Thor20
Payload	7 kg	7 kg	12 kg	20 kg
Maximum reach	900 mm	900 mm	1300 mm	1700 mm
Weight	32 kg	38 kg	35 kg	72 kg
Degrees of freedom	6	6	6	6
Repeatability[*1]	±0.03 mm	±0.03 mm	±0.05 mm	±0.1 mm
TCP maximum speed	3.1 m/s	2.5 m/s	3.7 m/s	2.8 m/s
Joint maximum speed	J1: 240°/s J2: 240°/s J3: 250°/s J4: 325°/s J5: 440°/s J6: 440°/s	J1: 180°/s J2: 180°/s J3: 180°/s J4: 320°/s J5: 320°/s J6: 320°/s	J1: 200°/s J2: 150°/s J3: 215°/s J4: 325°/s J5: 410°/s J6: 440°/s	J1: 120°/s J2: 120°/s J3: 150°/s J4: 210°/s J5: 210°/s J6: 210°/s
Joint range of motion	J1: -360° ~ 360° J2: -179° ~ 179° J3: -165° ~ 165° J4: -360° ~ 360° J5: -360° ~ 360° J6: -360° ~ 360°	J1: -360° ~ 360° J2: -179° ~ 179° J3: -160° ~ 160° J4: -360° ~ 360° J5: -360° ~ 360° J6: -360° ~ 360°	J1: -360° ~ 360° J2: -179° ~ 179° J3: -170° ~ 170° J4: -360° ~ 360° J5: -360° ~ 360° J6: -360° ~ 360°	J1: -360° ~ 360° J2: -180° ~ 180° J3: -170° ~ 170° J4: -360° ~ 360° J5: -360° ~ 360° J6: -360° ~ 360°
IP rating	IP54	IP54	IP54	IP54
Operating temperature	0°C ~ 50°C			
Operating humidity	Maximum 90% RH (40°C, non-condensing)			

Robot controller	Specification
Model	CB-FS-3.2T*2
Dimensions	483 mm x 377 mm x 192 mm
Weight	16 kg
IP rating	IP20
Power supply	200-240 V AC, 50 Hz/60 Hz
Rated short-circuit current	2 kA
Universal I/O	Standard: 16 DI/16 DO/2 AI/2 AO
Communication mode	TCP/IP communication RS232 communication Modbus-TCP communication
Teach pendent	Model: TP3.1 Weight: 1.75 kg Screen type: Capacitive touch screen Screen size: 12.1 inches Screen resolution: 1280 x 800
Operating temperature	0°C ~ 50°C
Operating humidity	Maximum 90% RH (40°C, non-condensing)

Note*1: Under thermal steady-state conditions

Note*2: The Thor7, Thor7 Pro, and Thor12 robots are equipped with the controller model CB-FS-3.2T-0.6KW; and the Thor20 robot is equipped with the controller model CB-FS-3.2T-1KW.

4.2. Robot arm dimensions

All dimensions are in millimeters (mm).

Thor7

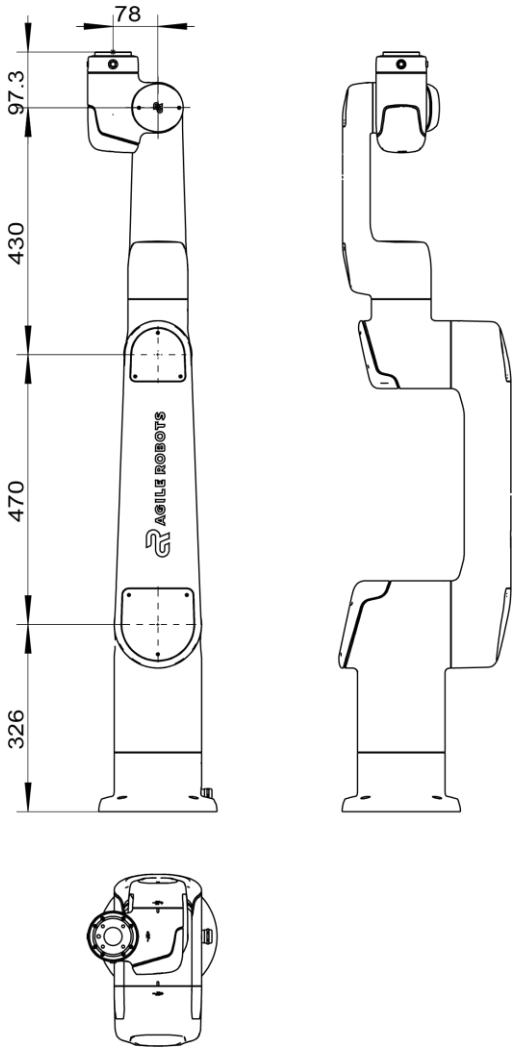

Thor7 Pro

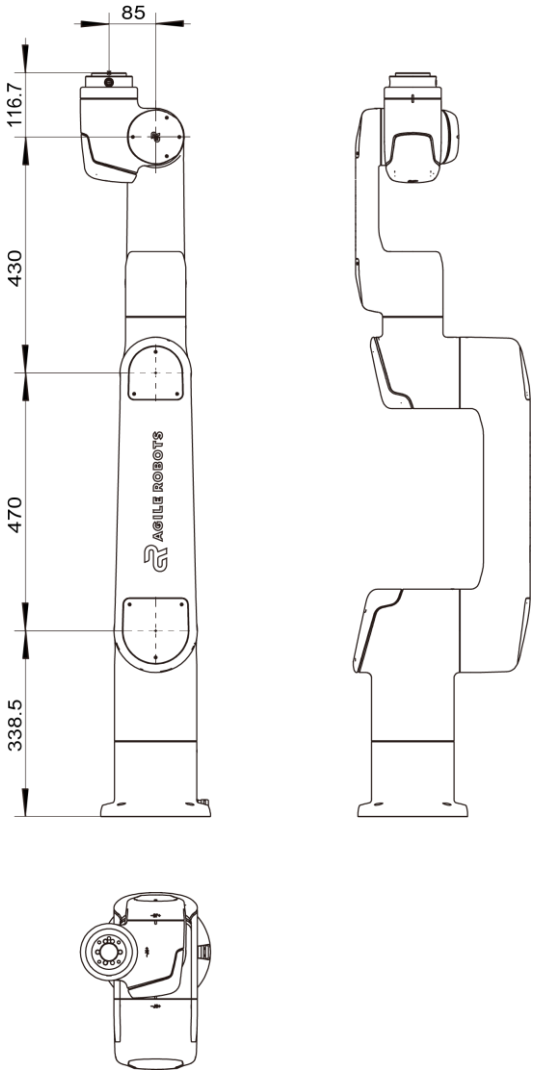

Thor12

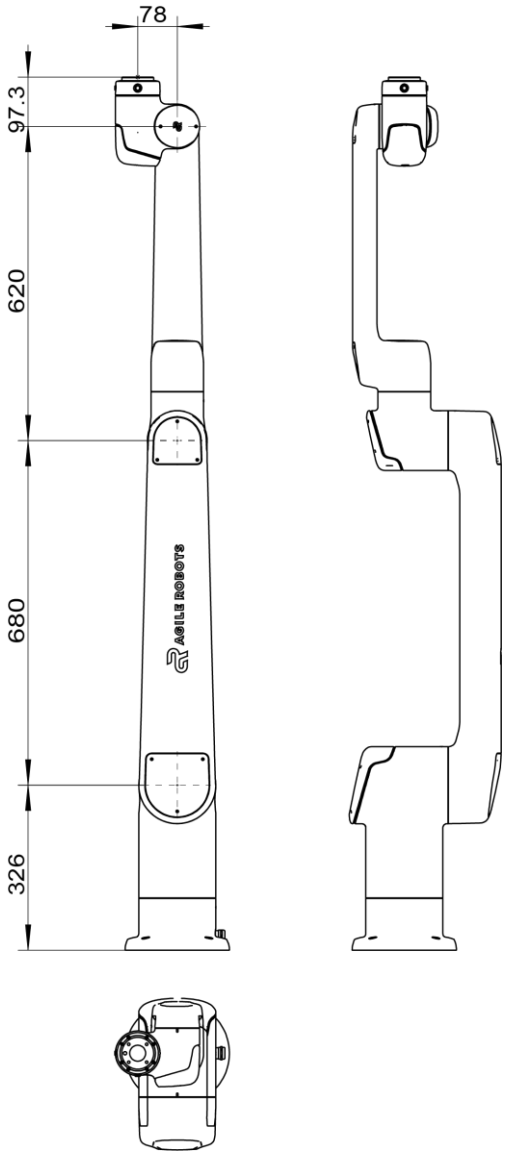

Thor20

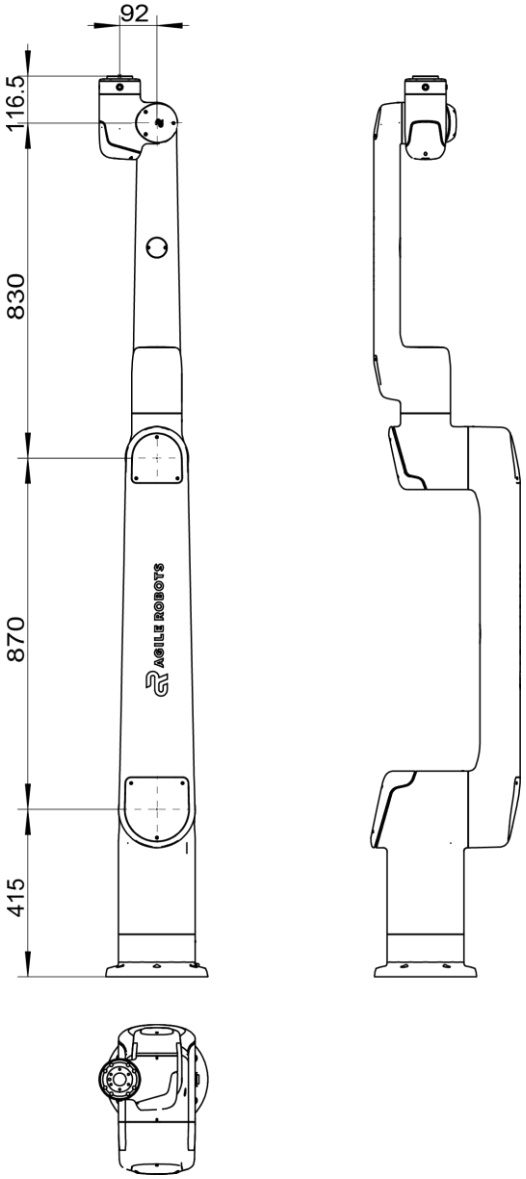

4.3. Controller dimensions

Controller dimensions are shown below. All dimensions are in millimeters (mm).

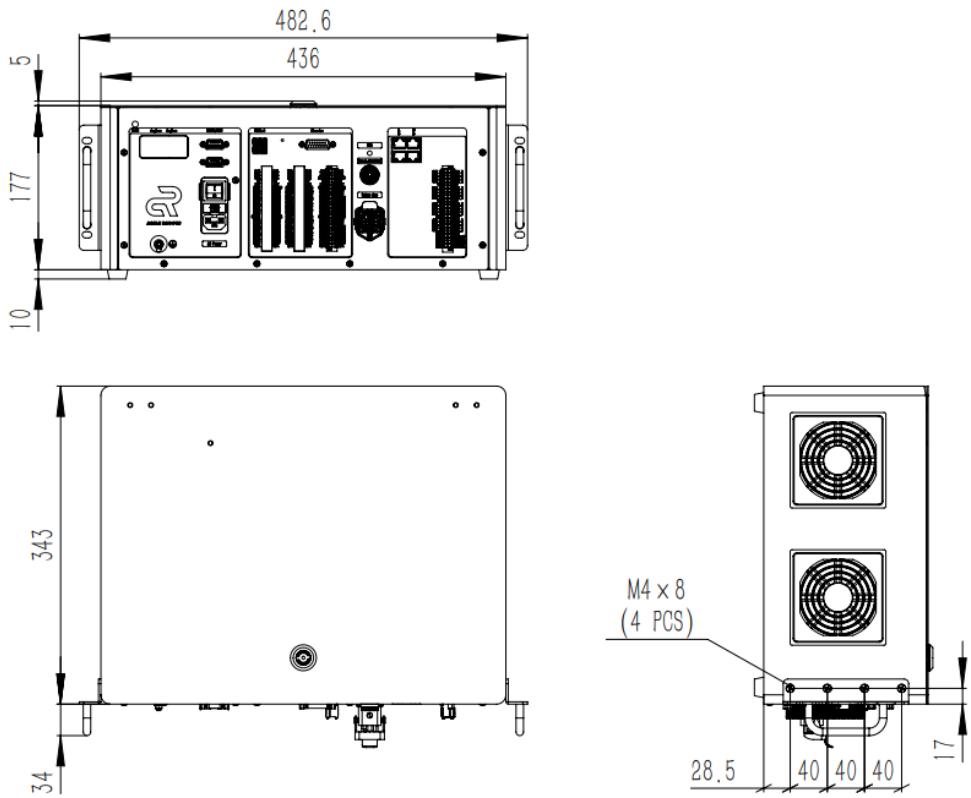

Teach pendant dimensions are shown below. All dimensions are in millimeters (mm).

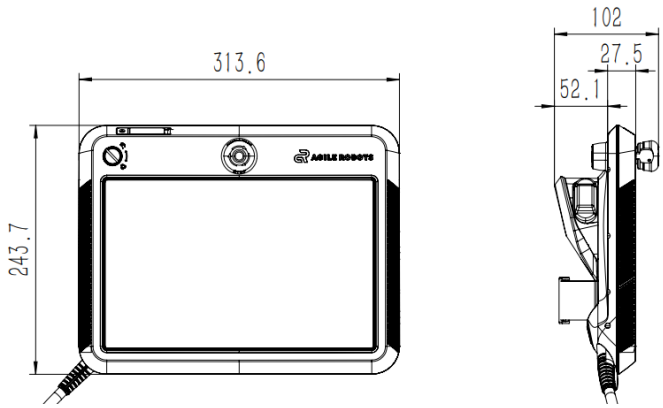

5. Installation

5.1. Robot Arm Mounting and Fixation

Robot arm base mounting dimensions are shown below. All dimensions are in millimeters (mm).

Thor7

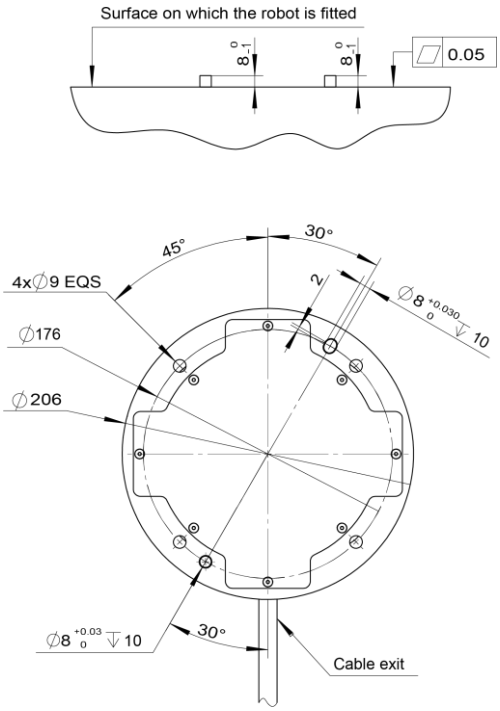

Thor7 Pro

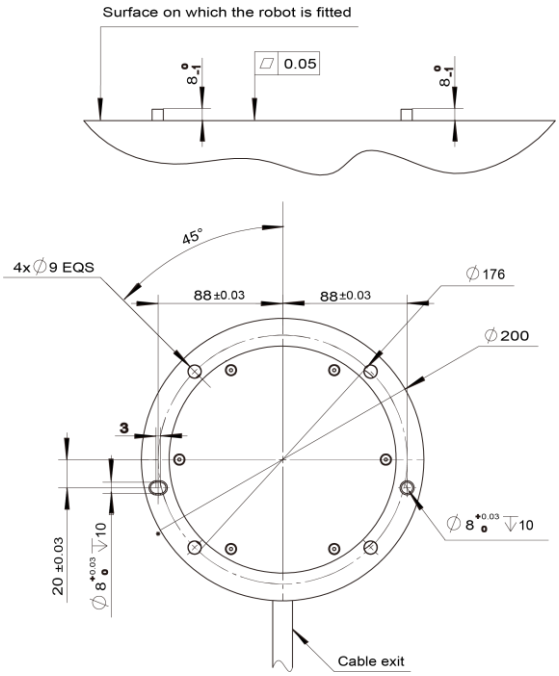

Thor12

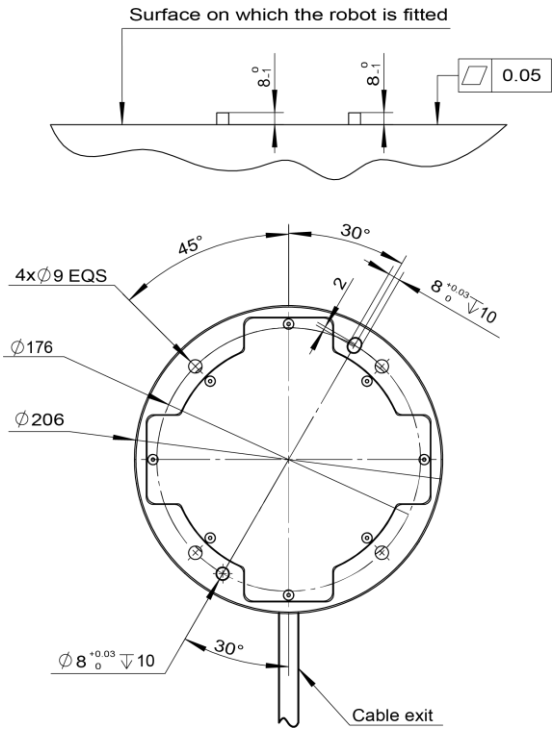

Thor20

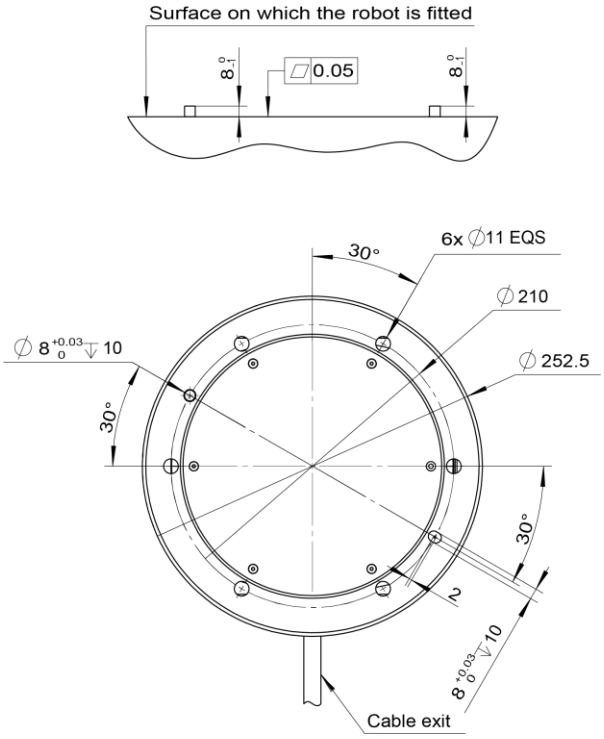

5.2. End-Effector Mounting and Fixation

The Robot arm flange structure dimensions are shown below are shown in the

figure. All dimensions are in millimeters (mm).

Thor7

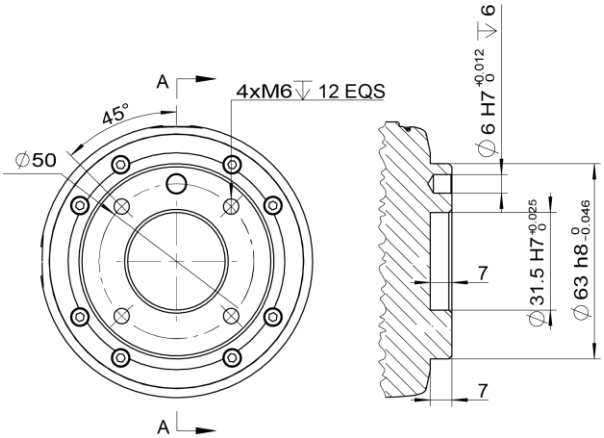

Thor7 Pro

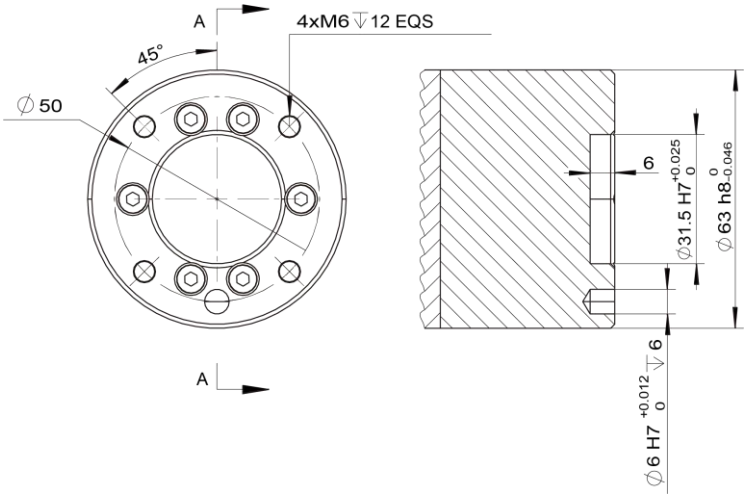

Thor12

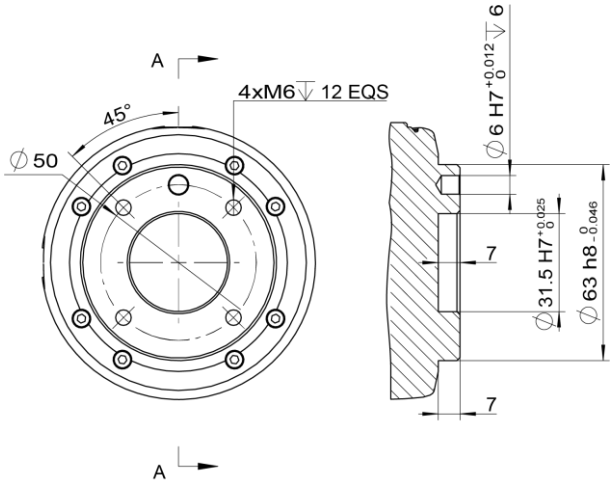

Thor20

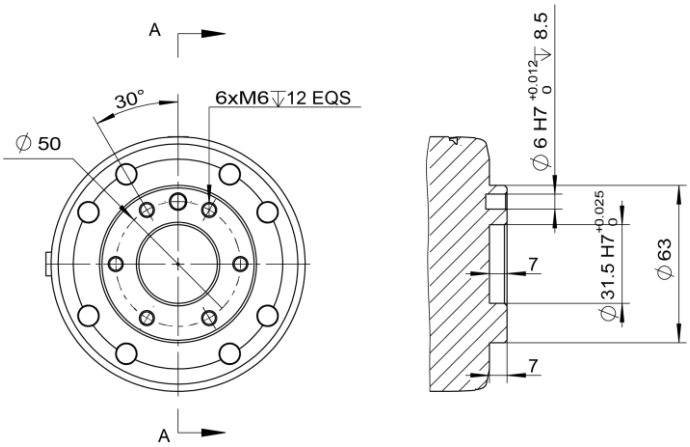

6. Controller Electrical Interfaces

These electrical interfaces on the controller panel are distributed as follows:

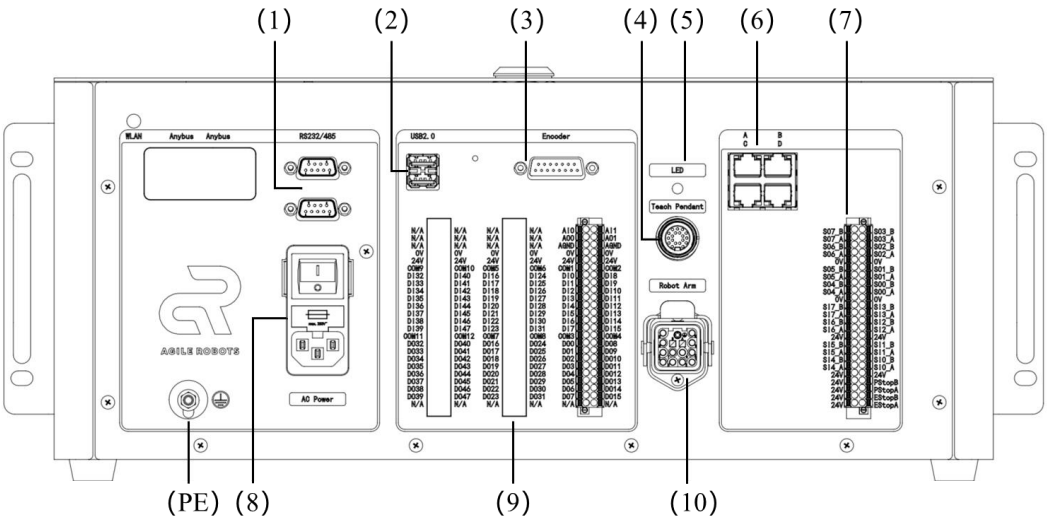

No.	Description
(1)	RS232/485 interface
(2)	USB interface
(3)	External encoder interface
(4)	Teach pendant interface
(5)	Indicator
(6)	Ethernet interface
(7)	Safety interface
(8)	Power interface and switch
(9)	Universal I/O interface
(10)	Robot arm interface

7. Transport

During transportation, the product should be transported in its original packaging.

The product packaging should be properly kept for reuse in future transportation.

8. FCC statement

Please take attention that changes or modification not expressly approved by the party responsible for compliance could void the user's authority to operate the equipment.

This device complies with Part 15 of the FCC Rules. Operation is subject to the following two conditions:

(1) This device may not cause harmful interference, and

(2) This device must accept any interference received, including interference that may cause undesired operation.

9. Disclaimer

Agile Robots is committed to the continuous improvement of product reliability and performance. We are constantly conducting research and development, as well as innovation, to ensure that our robotic technology remains at the forefront of the industry. To this end, we reserve the right to upgrade our products and user manuals at any time to reflect the latest technological advancements and improvements. Please note that we may not issue individual notifications for every change, but we encourage users to regularly check our customer service department for the most updated information.

We strive to ensure the accuracy and reliability of the content in this user manual to provide more detailed product operation and maintenance guidelines. However, given the complexity and constant evolution of technology, we cannot guarantee that there are no errors or omissions in the user manual. If users encounter any issues or have questions when using the product, we recommend contacting our technical support team directly for assistance.

Agile Robots assumes no legal responsibility for any errors, omissions, or inaccuracies in the user manual, whether due to negligence, misunderstanding, or other causes. We advise users to read the manual carefully before using the product and to follow all instructions and safety guidelines.

Our ongoing improvements and updates to the user manual demonstrate our commitment to customer satisfaction and service quality. We appreciate your understanding and support and welcome any feedback to help us improve our products and services.

Agile Robots SE

Plinganserstrasse 134, 81369 Muenchen, Germany