GQ-JBD-8851S-Antenna Specification

Supplier Name：Shanghai Guoqin Electronic Technology Co., Ltd.

address：Room 1_203 J, 337 Shahe Road, Jiangqiao Town, Jiading District, Shanghai

Model: GQ-JBD-8851S

Product: Bluetooth Transparent Transmission Module

Wireless Operating Frequency: 2.4GHz

Channel Spacing: 2MHz

Antenna Gain: 1.05 dBi

Channel list：0~39, On-board Antenna

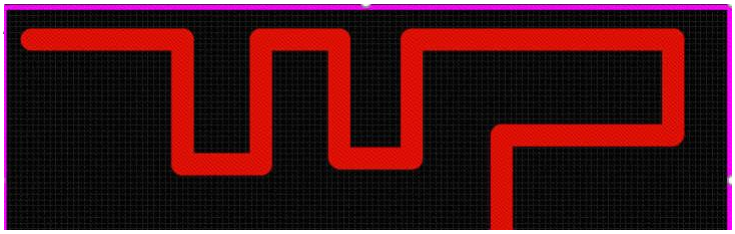

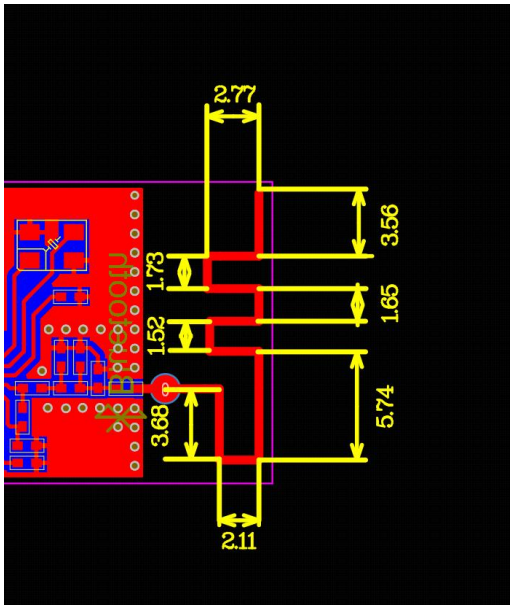

Antenna gain and efficiency test results

Model	Test Item	Test State	Frequency (MHz)	Efficiency(%)	Gain(dBi)
GQ-JBD-8851S	Gain	FS	2402	42.76	0.46
			2407	44.18	0.72
			2412	45.27	0.81
			2417	45.59	0.71
			2422	47.55	1.05
			2427	46.68	0.97
			2432	47.14	0.82
			2437	46.32	0.70
			2442	45.07	0.58
			2447	43.52	0.69
			2452	42.72	0.43
			2457	42.32	0.51
			2462	41.40	0.52
			2467	40.46	0.21
			2472	40.61	0.42
			2477	40.91	0.16
			2482	40.55	0.32
			2487	40.96	0.32
			2492	40.62	0.28

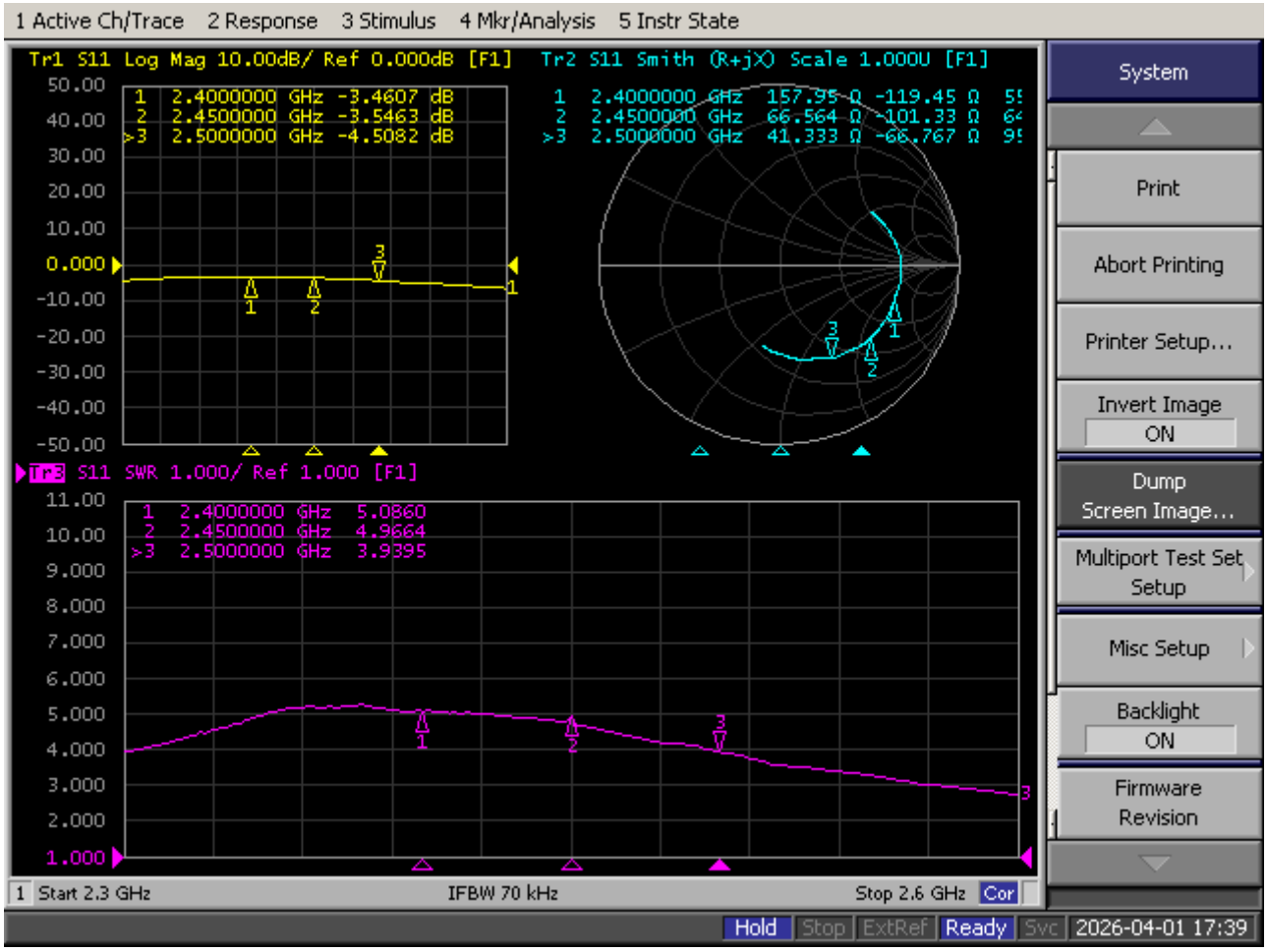

(MHz)	2400	2450	2500
VSWR	5.0860	4.9664	3.9395

Cut1

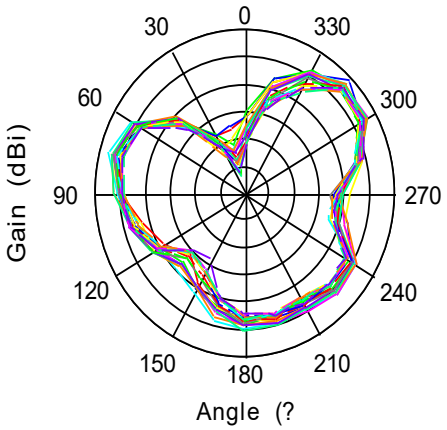

Max: 2
Min: -10
Scale: 2/div

2402 MHz	2452 MHz
2407 MHz	2457 MHz
2412 MHz	2462 MHz
2417 MHz	2467 MHz
2422 MHz	2472 MHz
2427 MHz	2477 MHz
2432 MHz	2482 MHz
2437 MHz	2487 MHz
2442 MHz	2492 MHz
2447 MHz	

X-Y面 2D

Cut2

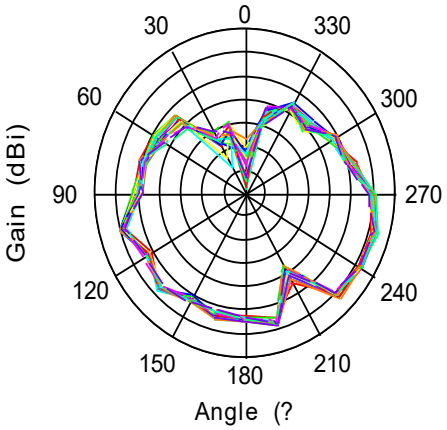

Max: 5
Min: -30
Scale: 5/div

2402 MHz	2452 MHz
2407 MHz	2457 MHz
2412 MHz	2462 MHz
2417 MHz	2467 MHz
2422 MHz	2472 MHz
2427 MHz	2477 MHz
2432 MHz	2482 MHz
2437 MHz	2487 MHz
2442 MHz	2492 MHz
2447 MHz	

X-Z面 2D

Cut3

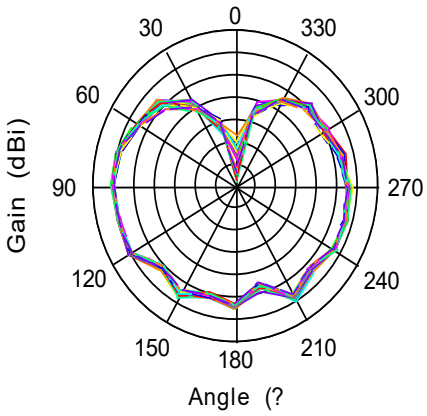

Max: 5
Min: -30
Scale: 5/div

2402 MHz	2452 MHz
2407 MHz	2457 MHz
2412 MHz	2462 MHz
2417 MHz	2467 MHz
2422 MHz	2472 MHz
2427 MHz	2477 MHz
2432 MHz	2482 MHz
2437 MHz	2487 MHz
2442 MHz	2492 MHz
2447 MHz	

Y-Z面 2D
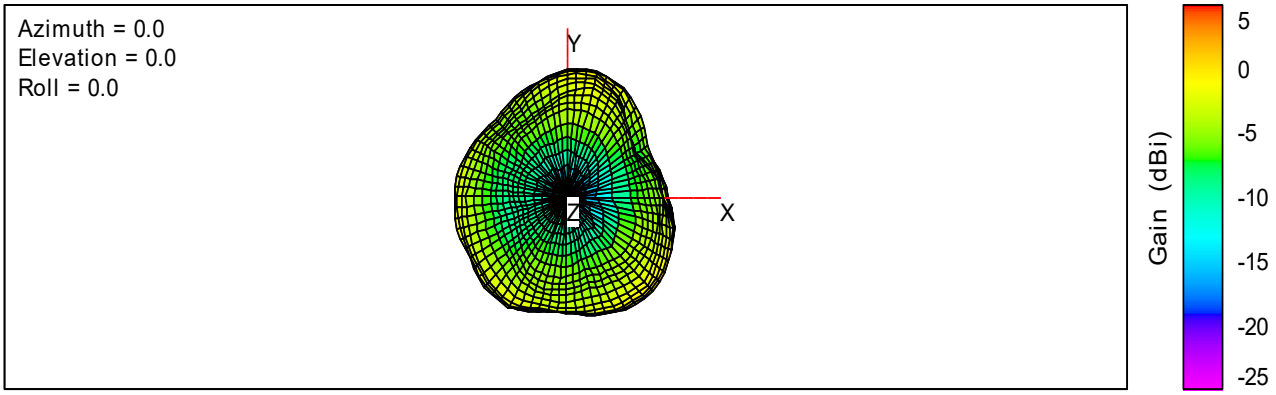
Total