FibreSeeker3

Product Description

Table of Contents

Chapter One PRINTER INTERDUCTION 1

1.1 Specifications 1

1.2 Components 3

1.2.1 Front View 3

1.2.2 Back View.....3

1.2.3 CFC Dual-Nozzle Design.....4

1.3 Accessories 6

Chapter Two UNBOXING STEPS 7

2.1 Preparations 7

2.2 Unpacking and Disassembly.....9

2.3 Installing the Screen and Bracket 12

Chapter Three HUMAN INTERFACE (HMI) 13

3.1 Home Page..... 13

3.2 Setting 14

3.2.1 Control 15

3.2.2 Calibration--Print Calibration 18

3.2.3 Toolbox 19

3.2.4 Others 20

3.2.4 More Settings 21

3.3 Materials 22

3.4 Printing File 23

3.5 Workflow 25

Chapter Four ADDITIONAL NOTES 26

4.1 Attention 26

4.2 Basic Slicing 27

4.3 Maintenance 28

4.4 Support 29

Chapter One PRINTER INTERDUCTION

1.1 Specifications

Technology	Fibre	Composite Fibre Co-extrusion (CFC)
	Plastic	Fused Filament Fabrication (FFF)
Printer Body	Device Dimensions	615 x 595 x 540 mm3
	Device Weight	32 kg
	Build Volume (W×D×H)	300×300×245mm3
	Outer Frame	Plastic and Glass
	Printing Accuracy	±0.2mm
	Minimum Layer Thickness	50μm
Printhead	Hotend	All Metal
	Nozzle	Hardened Steel
	Max FFF Nozzle Temperature	350℃
	Max CFC Nozzle Temperature	350℃
	FFF Nozzle Diameter	0.4mm
	CFC Nozzle Diameter	0.7mm
	Fibre Cutter	Built-in
	FFF Filament Diameter	1.75 mm
Chamber	Active Chamber Heating	Supported
	Max Temperature	65℃
Heatbed	Supported Build Plate Type	Flexible High-Temperature Base
	Max Heatbed Temperature	120℃

	Bed-Leveling	Fully Automatic Leveling
Material Storage	FFF Plastic	Back Hangers
	CFC Fibre	Embedded Chamber
Speed	Max FFF Speed	500mm/s
	Max CFC Speed	20cc/h
Cooling	Part Cooling Fan	Open Loop Control
	Cooling Fan for Hotend	Closed Loop Control
	Main Control Board Fan	Closed Loop Control
Supported Filament Type	FFF Plastic	PLA, PETG, PC, PACF, PETGF
	CFC Fibre	X-CCF, X-CGF
	Composite Tensile Strength	Up to 900 MPa
Electronics	Control Screen	5-inch Touchscreen
	Storage	32G BEMMC
	Control Interface	Touchscreen & PC App
Sensors	Live View Camera	Built-in; 1920 *1080
	Plastic Breakage Sensor	Supported
	Plastic Clogging Sensor	Supported
	Fiber Breakage Sensor	Supported
	Fiber Clogging Sensor	Supported
Software	Slicer	Rocket Slicer (FFF+CFC)
	Operating System	Windows, Mac
	Data Formats	Compatible with STL, STP,3MF
Electrical Requirements	Voltage	90-132V, 50/60Hz, 176-264V, 50/60Hz
	Max Power	1650W@110V; 2200W@220V
	Average Power	1650W@110V; 2200W@220V

1.2 Components

1.2.1 Front View

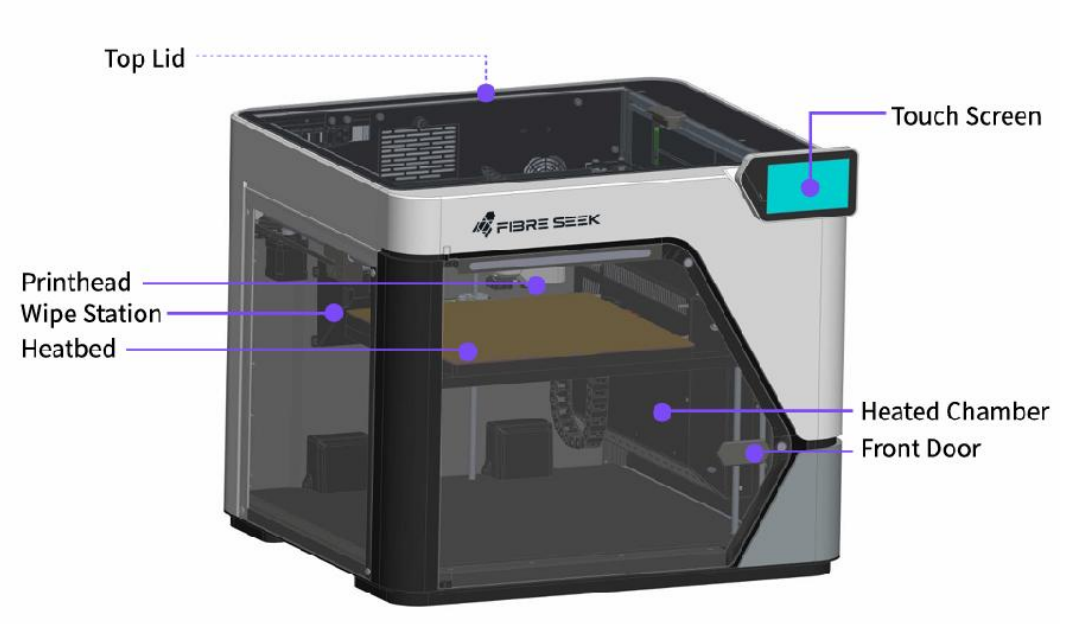

1.2.2 Back View

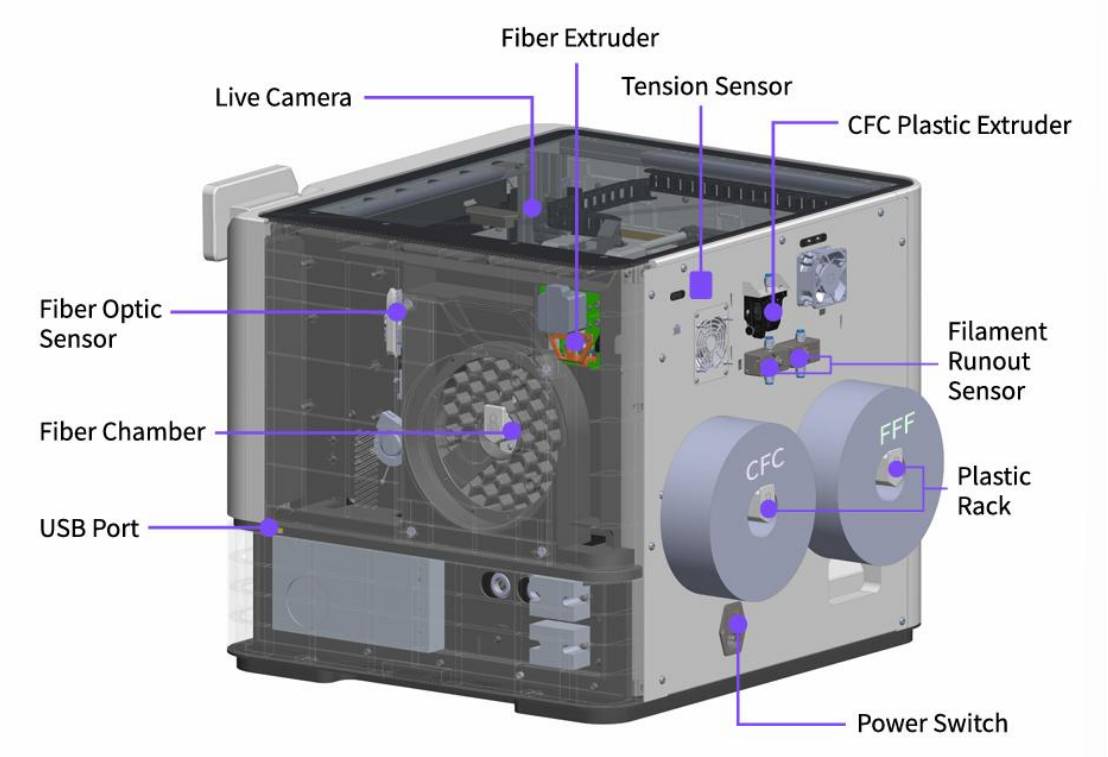

1.2.3 CFC Dual-Nozzle Design

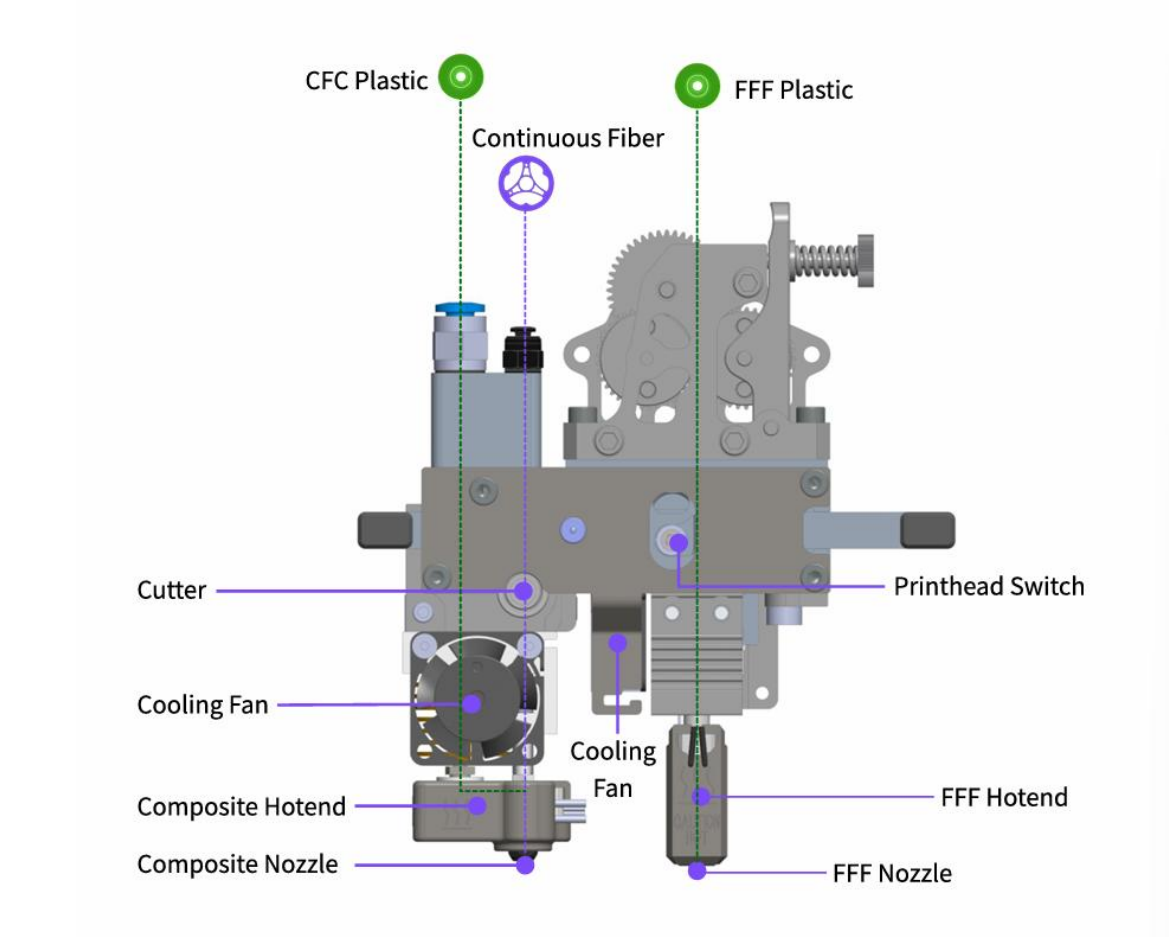

Materials

FFF Plastic: PLA, PETG, PC, PACF, PETGF, ABS, ASA, PPACF, PPSCF...

CFC Fibre: X-CCF, X-CGF...

CFC Plastic: PLA, PETG, PA...

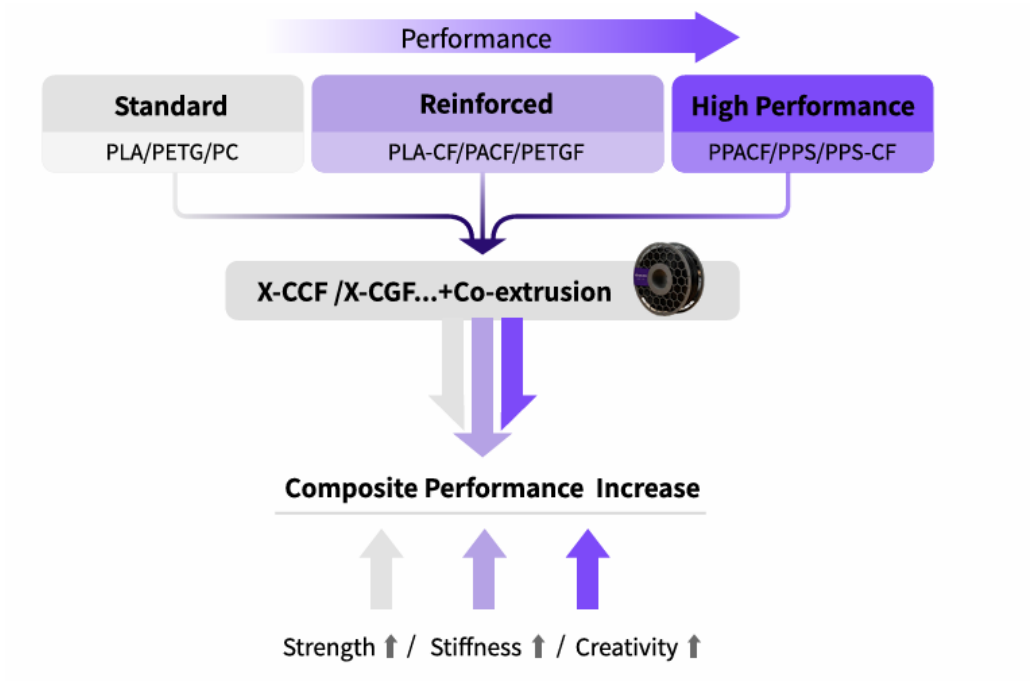

X-CCF:

X-CCF is a continuous carbon fiber filament impregnated with thermoset resin. It features a fiber volume fraction of approximately 60%. It combines exceptional tensile strength with low density, and boasts excellent printability.

1.3 Accessories

Chapter Two UNBOXING STEPS

2.1 Preparations

1. Environmental Conditions

Select a flat and stable load-bearing desktop; maintain an ambient temperature of 10℃–30℃ and humidity of 30%–60%, avoiding extreme environments and direct sunlight; connect to a stable, grounded AC power source according to your local region, and keep away from flammable, explosive, dusty, or corrosive materials.

2. Host Configuration

Windows 10 or later; Mac OS X v10.15 or later — Intel® Core 2 or AMD Athlon® 64 processor; 2 GHz or faster processor — 8 GB of RAM recommended (4 GB minimum) — 2.0 GB or more of available hard-disk space.

Download address: Fibreseeker 3 – Fibreseek | The World's First Personal Continuous Fibre 3D Printer

3. Tool Preparation

Prepare scissors, a utility knife, and cut-resistant gloves for unboxing, along with the included hex keys, screws, and other assembly tools; also prepare the printer unit, filaments, power cable, filament spool holder, screen, and other original accessories, checking in advance to ensure no parts are missing or damaged.

4. Installation Check, Estimated Time & Precautions

After installation, ensure the filament spool holder is securely assembled, the screen cables are properly connected, and the software is correctly configured; the estimated installation time is 10–30 minutes; during operation, ensure the power is disconnected and avoid touching high temperature components. Strictly follow the manual for assembly and ensure all accessories are properly installed. Once installation is complete, a brief dry-run movement test can be performed; proceed with formal printing only after confirming the equipment operates without abnormal noise or error messages.

2.2 Unpacking and Disassembly

a. Dismantle the bottom fastener of the carton, remove the rest of the fixing bag, etc.

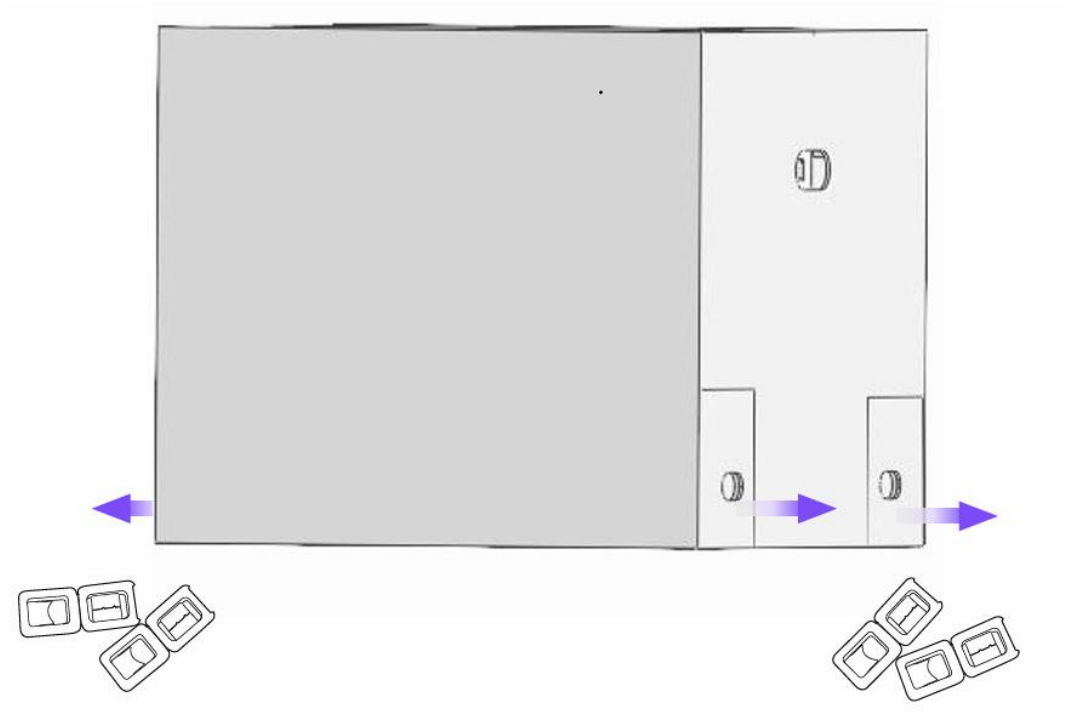

b. Remove cartons slowly from the bottom to the top to prevent bumping the machine.

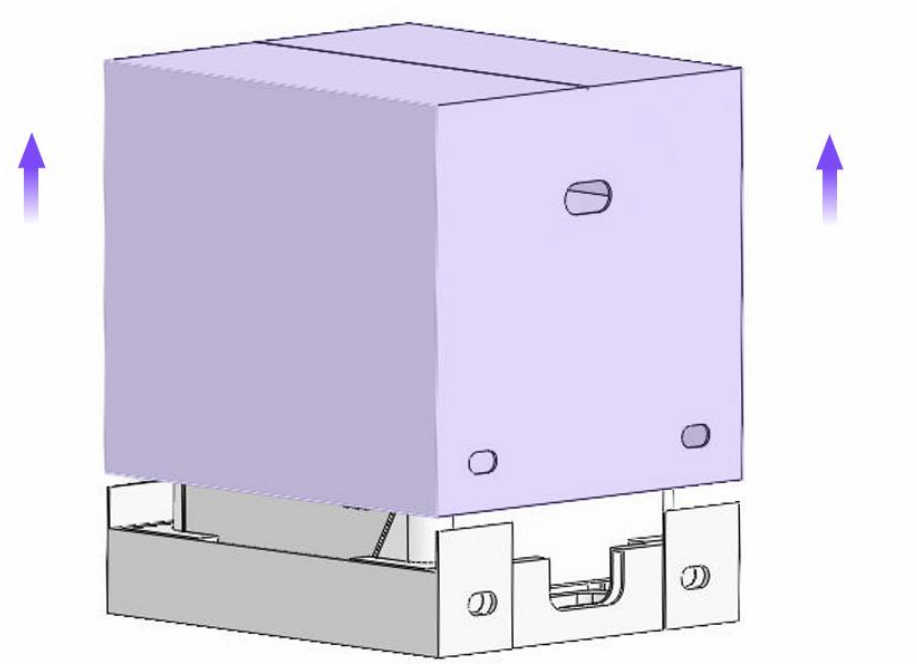

c. Remove the top foam and take off the top glass.

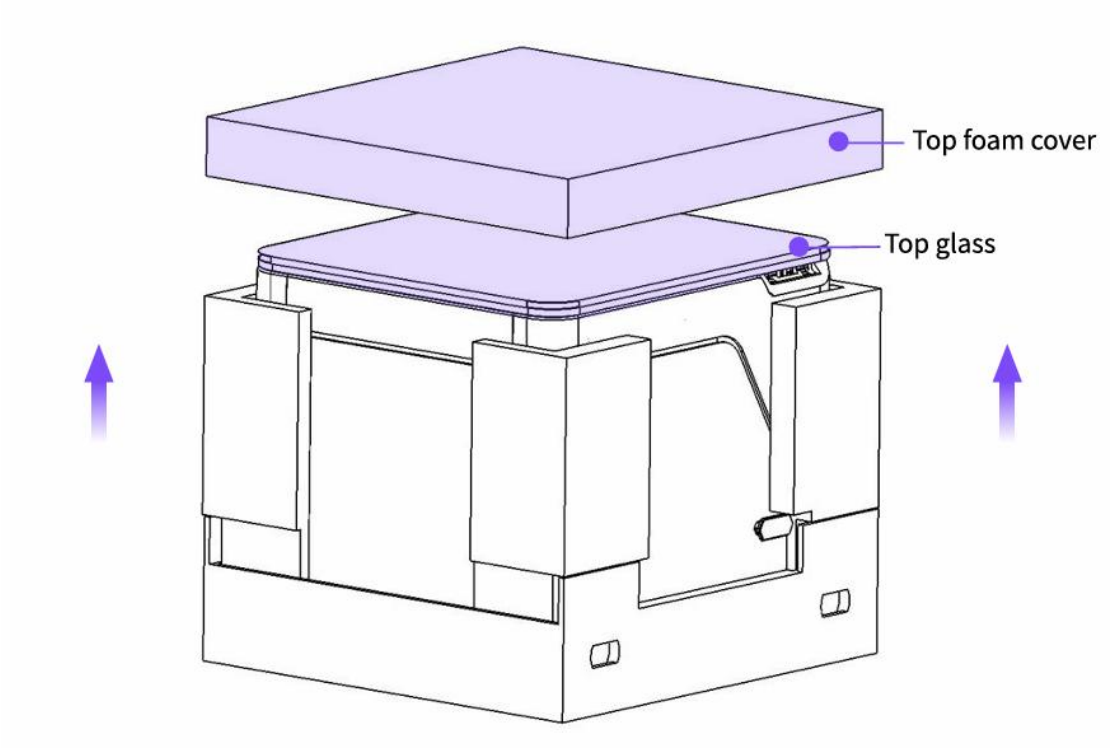

d. Remove the four-corner pillar foam.

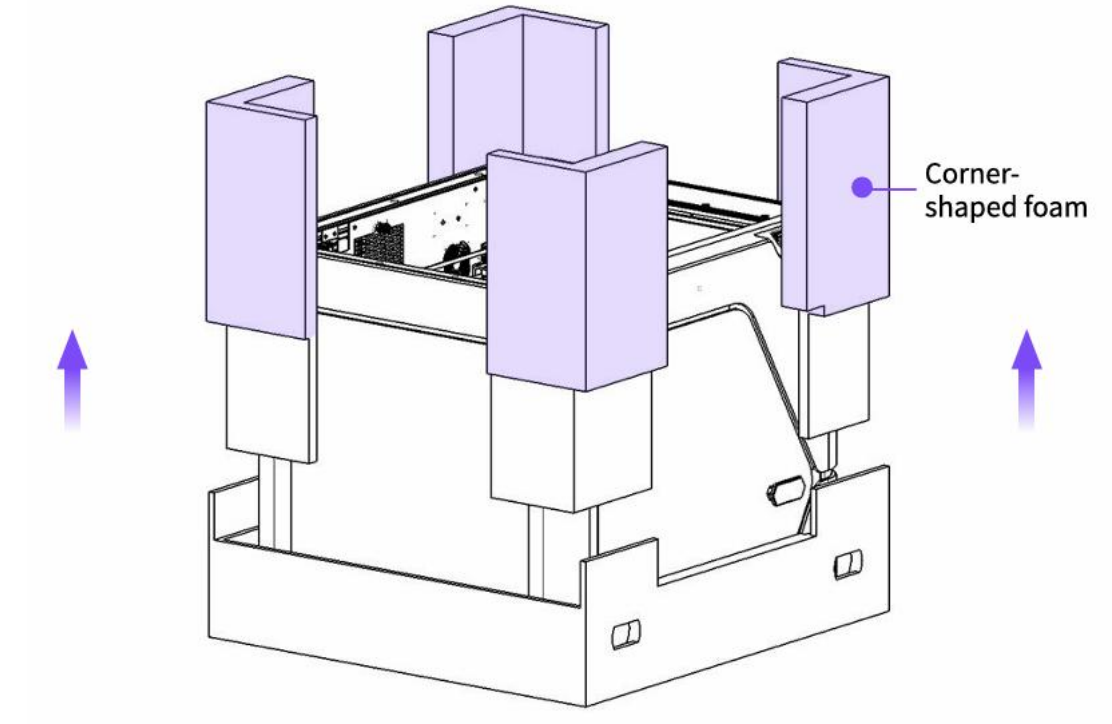

e. Keep the bottom of the carton still, two people lift out the printer, place the printer on a flat surface.

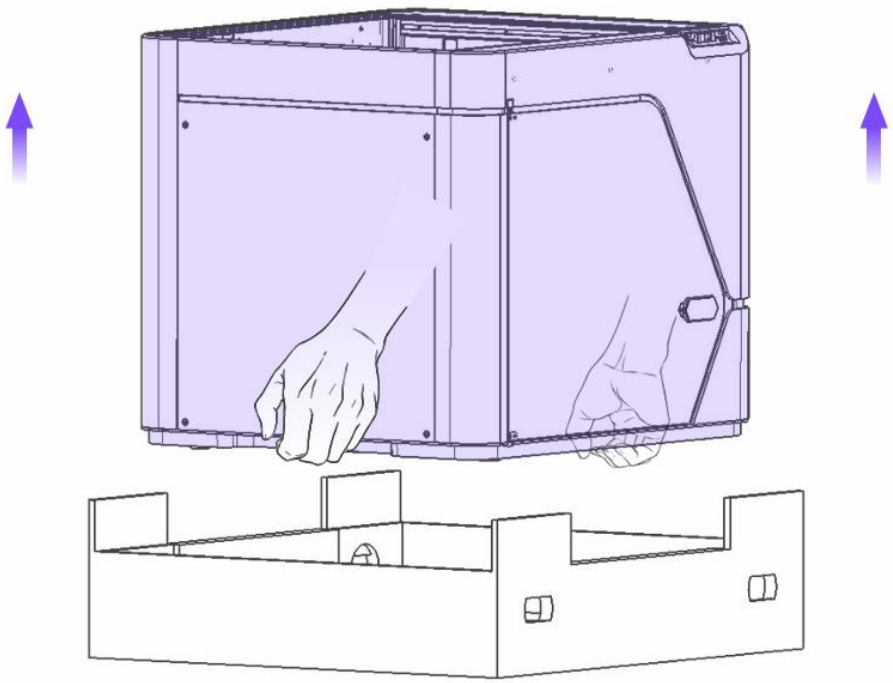

f. Turn clockwise twice.

g. Take out the inner packaging from top to bottom.

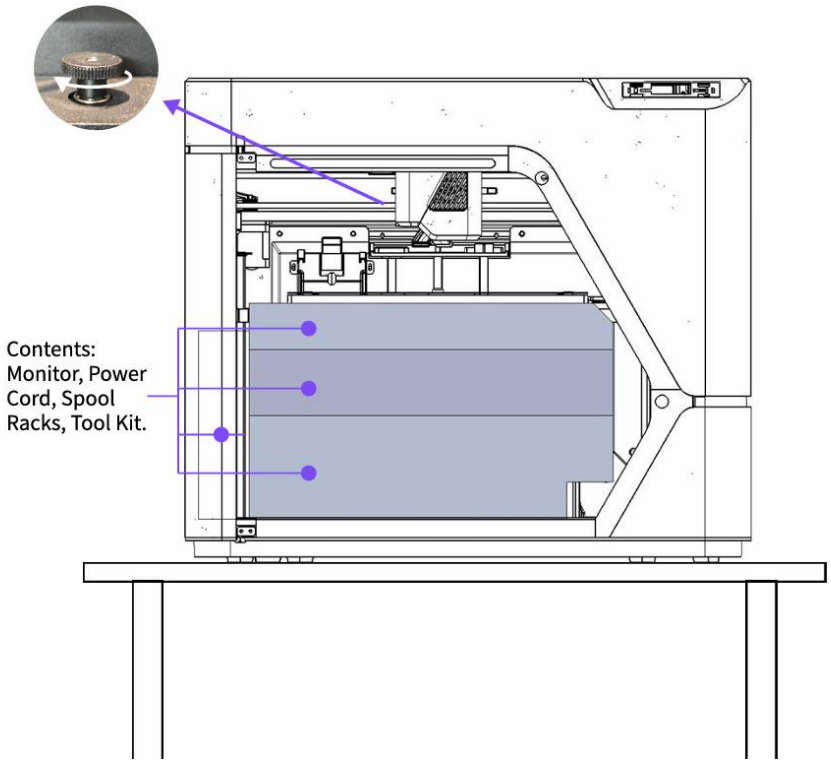

2.3 Installing the Screen and Bracket

a. Screw the Racks.

b. Remove the latch.

c. Flip the hinge up, align with the locating pin, and lock the display in place as shown.

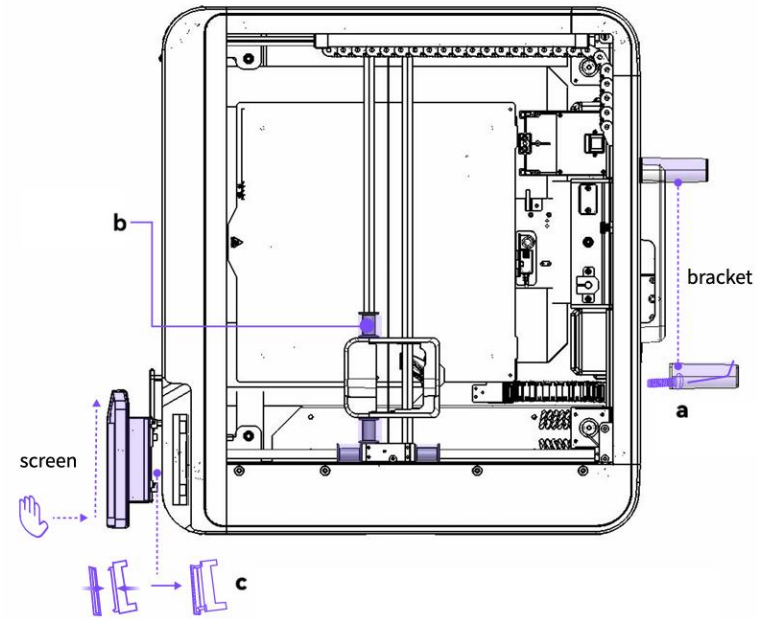

d. Take the power cord out of the accessory box and connect it to the machine to turn it on.

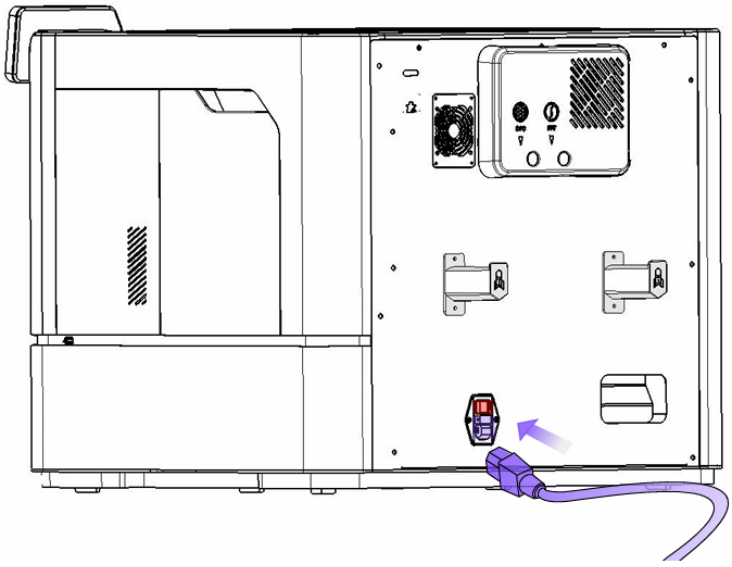

Chapter Three HUMAN INTERFACE (HMI)

3.1 Home Page

After turning on the device, select the language in sequence, connect to Wi-Fi and perform device calibration, and the home screen will be displayed…

The home screen consists of two pages. The first page includes the LOGO, Temperature, Material, and File sections, while the second page provides access to frequently used functions.

3.2 Setting

Through the sidebar settings menu, below are explanations of some key functions. It supports eight core functions: account, control, calibration, toolbox, WIFI, camera, updates, and more settings, allowing users to customize the printer's operating parameters according to their needs.

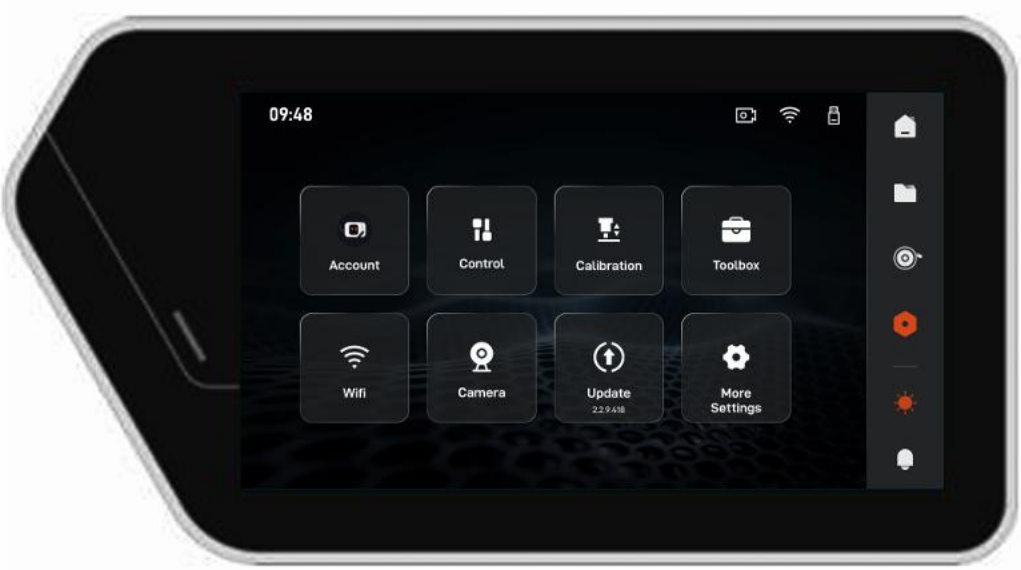

3.2.1 Control

This interface is the core interactive interface for device motion control, integrating three-axis coordinate display, manual displacement control, motor status management, and printhead switching.

① Real-time three-axis coordinate display area

② Movement step selection area

③ Three-axis manual movement and homing area

④ Motor release control area

⑤ Printhead switching area

This interface is the dedicated extruder control panel, integrating dual-nozzle temperature monitoring, precise material displacement, and fiber cutting.

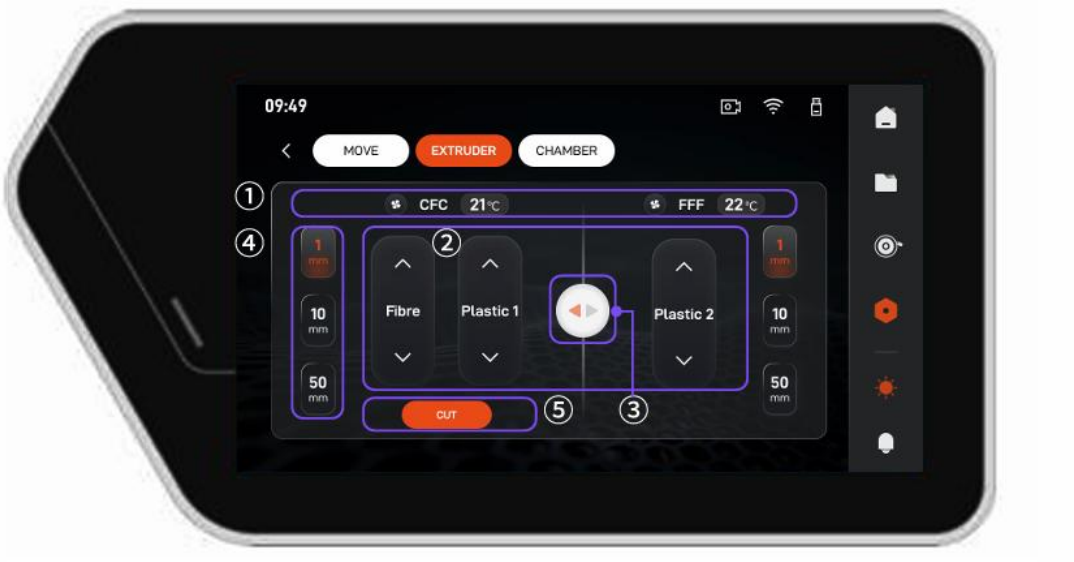

① Temperature Monitoring & Setting

② Extrusion Control

③ Printhead Switching

④ Extrusion Length Selection Area

⑤ Fiber Cutting Control

This interface is the dedicated build environment control panel, focusing on chamber temperature management and multi-dimensional fan system regulation. By monitoring chamber and heat-bed temperatures while adjusting filtration, cooling, and auxiliary fans, it maintains a stable and clean environment to ensure consistent print quality.

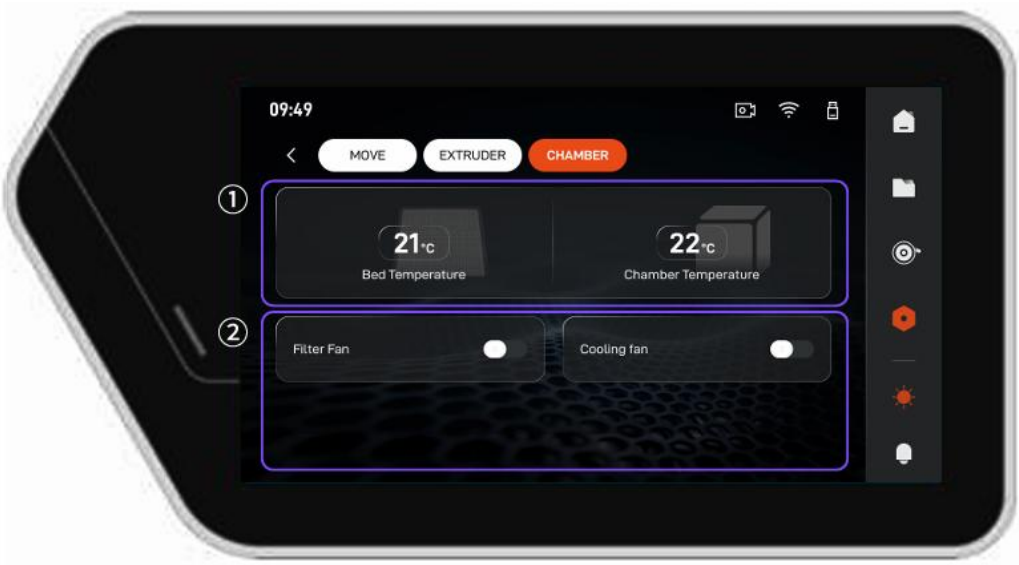

① Environmental temperature monitoring

② Function fan switch

3.2.2 Calibration--Print Calibration

This calibration kit includes self-adjusting functions for vibration compensation, nozzle offset, heated bed levelling, and nozzle temperature calibration, which can eliminate deviations and ensure high-quality continuous fibre 3D printing.

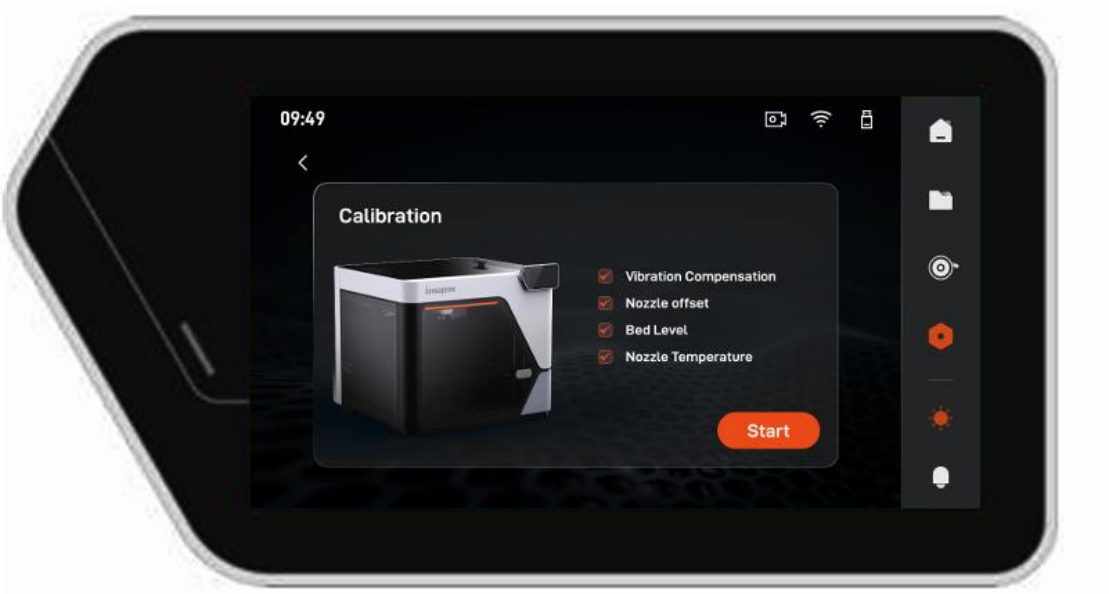

1. **Vibration Compensation:** Suppresses resonance to reduce surface artifacts and improve stability.
2. **Nozzle Offset:** Corrects dual-nozzle positions to prevent layer misalignment in multi-material prints.
3. **Bed Level:** Ensures a uniform nozzle gap to prevent warping or poor adhesion.
4. **Nozzle Temperature:** Optimizes heating response for stable temperature control and precision

3.2.3 Toolbox

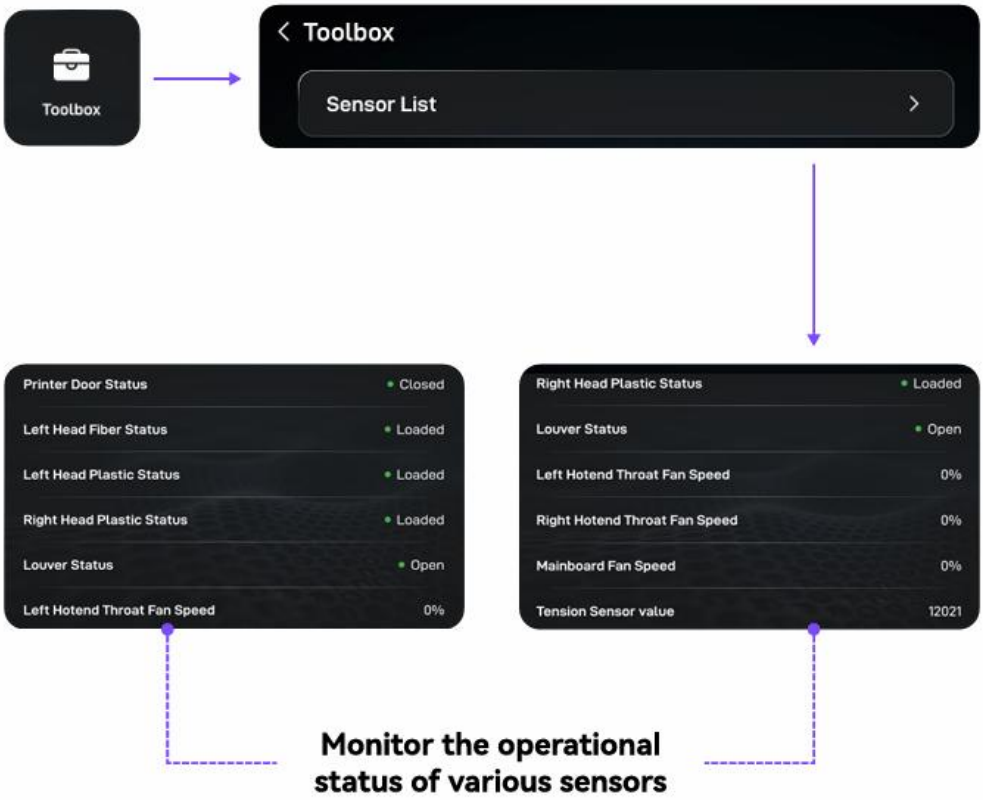
Toolbox
Toolbox
Sensor List
Printer Door Status Closed
Left Head Fiber Status Loaded
Left Head Plastic Status Loaded
Right Head Plastic Status Loaded
Louver Status Open
Left Hotend Throat Fan Speed 0%
Right Head Plastic Status Loaded
Louver Status Open
Left Hotend Throat Fan Speed 0%
Right Hotend Throat Fan Speed 0%
Mainboard Fan Speed 0%
Tension Sensor value 12021
Monitor the operational status of various sensors

3.2.4 Others

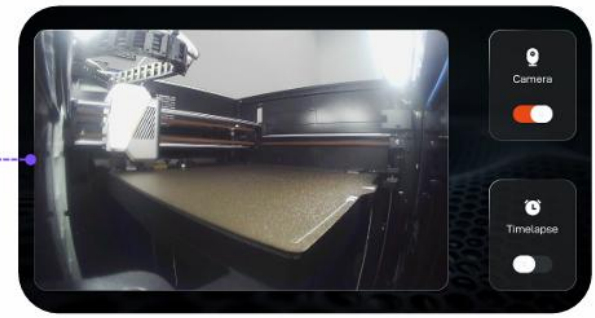

Camera

Monitor the printing situation in real time and keep track of the printing progress.

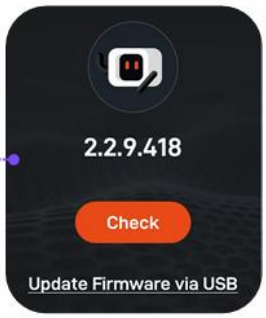

Setting-Update

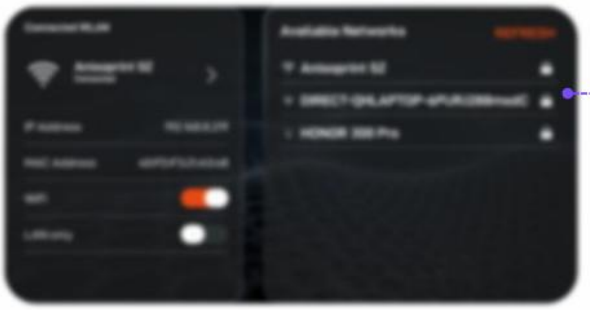

Setting-Wifi

The device supports Wi-Fi Direct, USB, and LAN-only modes.

3.2.4 More Settings

It supports extensive system settings and personalized configuration operations. You can freely switch the system display language and adjust the local date and time formats according to your region and usage habits.

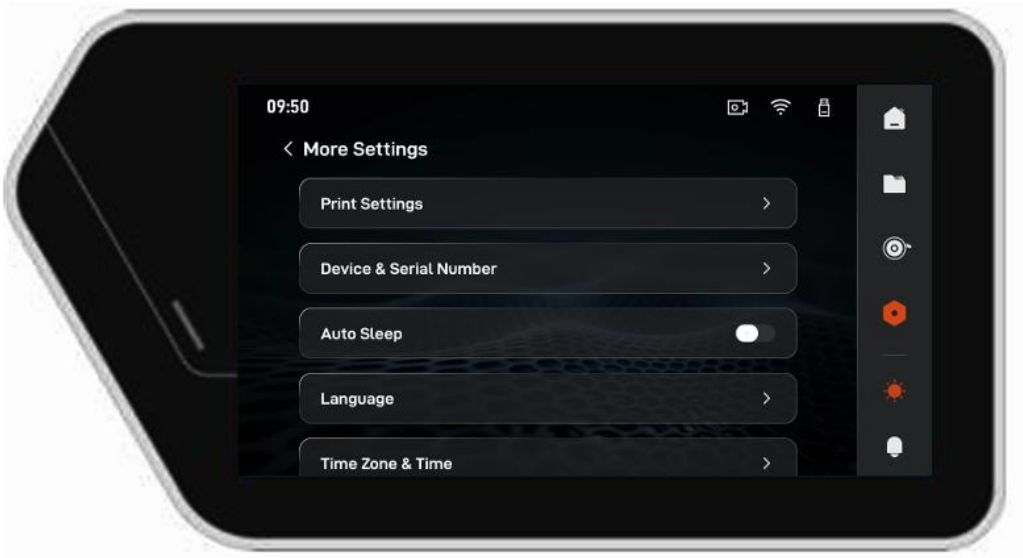

3.3 Materials

When performing Load or Unload operations, select the corresponding CFC or FFF materials. The recommended loading sequence is: Composite Plastic → Fiber → Plastic. Verify material types before loading to ensure a smooth and stable process.

We recommend using official filaments to ensure printing stability and quality. For third-party materials, please adjust printing parameters according to their properties and refer to our filament usage and parameter settings guide.

3.4 Printing File

1. **Local:** Print files stored in local storage, supporting offline access and printing to ensure production continuity without network connectivity.
2. **USB:** Reads and displays files from connected USB devices for quick import and cross-device data transfer.
3. **History:** Logs completed or interrupted print tasks, including parameters, duration, and results, for data tracking and task reprints

The following information is displayed once a file is selected.

1. **Basic Process Information:** Displays the material type, layer height, model height, estimated print time, model weight, and print mode, helping users quickly verify printing processes and material requirements.
2. **Auxiliary Function Status:** Synchronously displays the status of auto calibration, AI assistance, and time-lapse photography, allowing users to verify configurations before printing to ensure process control and data retention.

The following information is displayed during the printing process. During the printing process, users can pause or stop the print job. The printing status can also be monitored remotely.

3.5 Workflow

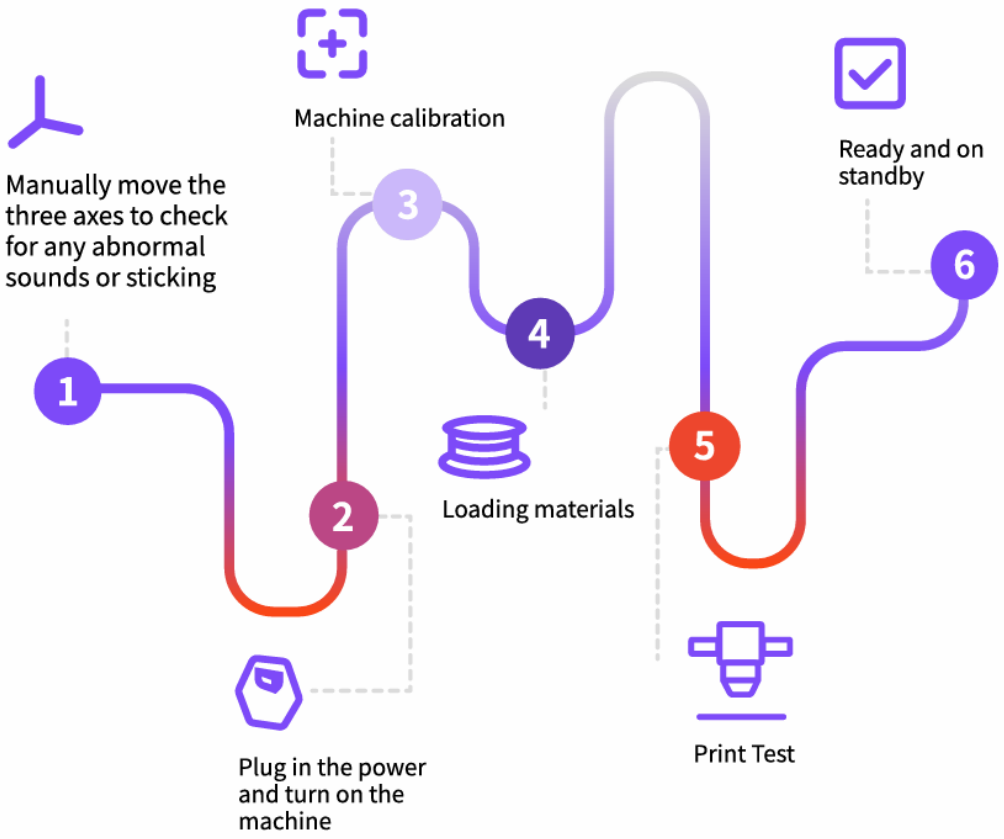
Manually move the three axes to check for any abnormal sounds or sticking
1
Plug in the power and turn on the machine
2
Machine calibration
3
Loading materials
4
Print Test
5
Ready and on standby
6

Chapter Four ADDITIONAL NOTES

4.1 Attention

Power off after cooling

After printing is completed, wait for the nozzle, heatbed, and chamber to cool down to a safe temperature before powering off to avoid residual heat damaging the components.

Regular Cleaning and Maintenance

Regularly clean the dust and residual material from the nozzle, filament path, print bed, and inside the chamber to keep the equipment clean.

Long-term Storage

When not in use for a long period, please remove the materials and store them in a sealed container, and turn off the main power supply of the equipment to prevent aging.

Material Usage

To ensure good print quality, highly hygroscopic materials (such as PETG, PC, PACF, etc.) should be dried in a drying chamber before each print, and it is strongly recommended to keep them in a sealed box to maintain dryness during printing.

4.2 Basic Slicing

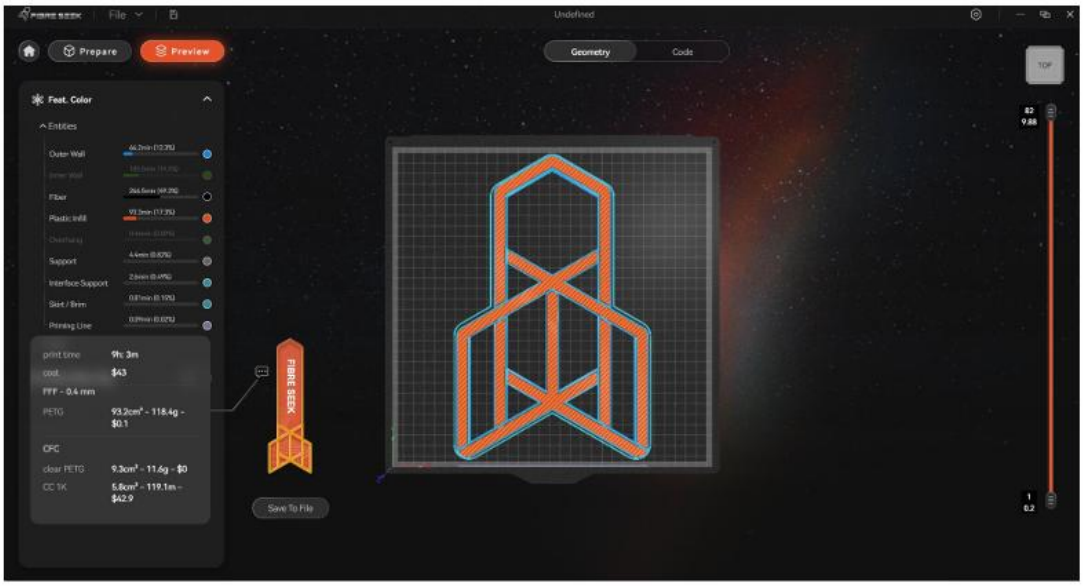

For more details, please visit

Official Website	Service Email
FIBRESEEK	Email: info@fibreseek3d.com

4.3 Maintenance

Frequency	Content
Every Use	After printing, wipe off residual waste and stringing on the build plate.
	Once the nozzle cools below 50℃, wipe away carbonized residue on the surface.
	Seal and store remaining filament to ensure moisture protection.
	Clean debris from the chamber and close the door.
50hrs	Apply printer-specific grease to guide rails and lead screws to ensure even lubrication.
	Re-verify heatbed leveling and correct deviations to ensure first-layer print quality.
	Check the power cord and ensure the plug is connected securely
300hrs	Replace aged, scratched, or clogged PTFE guide tubes; check connector airtightness.
	Inspect nozzle wear; replace directly if uneven extrusion or frequent clogging occurs.
	Re-execute nozzle and heatbed PID calibration to ensure temperature stability.
	Redo vibration compensation calibration to reduce layer lines and improve precision.
600hrs	Check the synchronous belts and pulleys: replace them immediately if tooth wear, cracks, or elastic failure is observed.
	Inspect timing belts and pulleys; replace immediately if there is tooth wear, cracks, or loss of elasticity
	Perform a full-process calibration: Nozzle Offset + Bed Leveling + Vibration Compensation + PID Calibration.
	Tighten the heater block, thermocouple, and

	thermistor to prevent temperature drift or heating anomalies.
	Check axis bearings; replace in time if there is abnormal noise, sticking, or excessive clearance.

4.4 Support

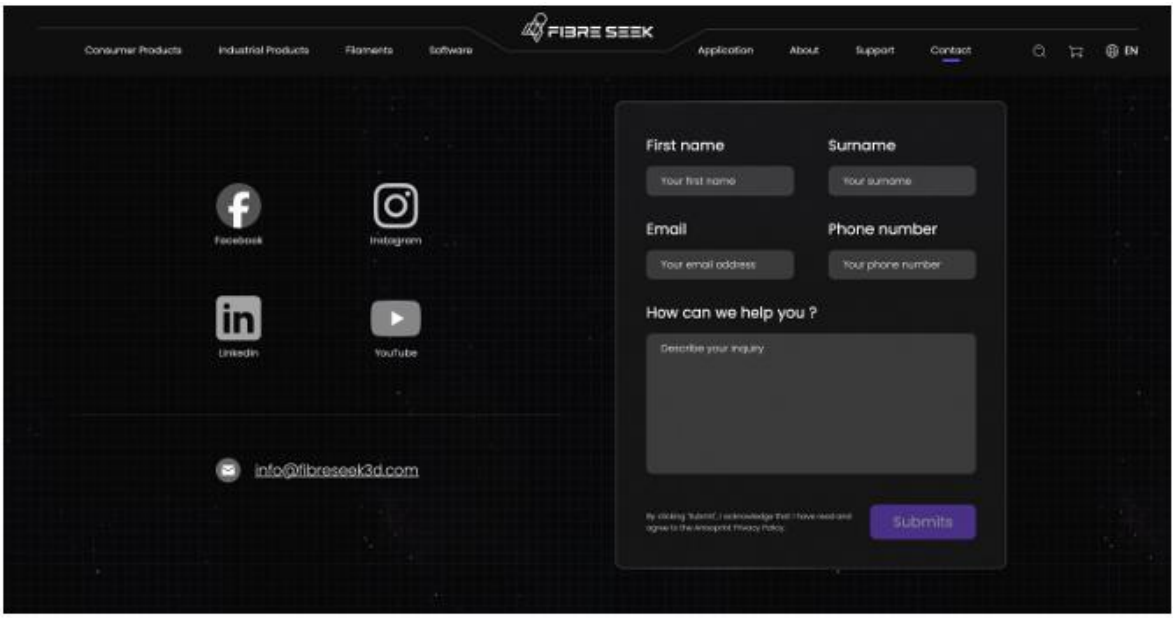

Official Website

FIBRESEEK

Agent

Please contact the local agent.

Service Email

Email: info@fibreseek3d.com.

Thank you for your choice! May every print be smooth and successful, and may every one of your creative ideas take shape perfectly.

FIBRE SEEK

FCC Statement

This device complies with part 15 of the FCC Rules. Operation is subject to the following two conditions: (1) This device may not cause harmful interference, and (2) this device must accept any interference received, including interference that may cause undesired operation.

This equipment has been tested and found to comply with the limits for a Class B digital device, pursuant to Part 15 of the FCC Rules. These limits are designed to provide reasonable
protection against harmful interference in a residential installation. This equipment generates uses and can radiate radio frequency energy and, if not installed and used in accordance with the instructions, may cause harmful interference to radio communications. However, there is no guarantee that interference will not occur in a particular installation. If this equipment does cause harmful interference to radio or television reception, which can be determined by turning the equipment off and on, the user is encouraged to try to correct the interference by one or more of the following measures:

-- Reorient or relocate the receiving antenna.
-- Increase the separation between the equipment and receiver.
-- Connect the equipment into an outlet on a circuit different from that to which the receiver is connected.
-- Consult the dealer or an experienced radio/TV technician for help.

Any Changes or modifications not expressly approved by the party responsible for compliance could void the user's authority to operate the equipment.

This equipment should be installed and operated with a minimum distance of 20cm between the radiator and your body.

This equipment complies with the FCC radiation exposure limits set forth for an uncontrolled environment, This transmitter must not be co-located or operating in conjunction with any other antenna or transmitter.