TRANSMITTER COMPONENTS Model:MLR6

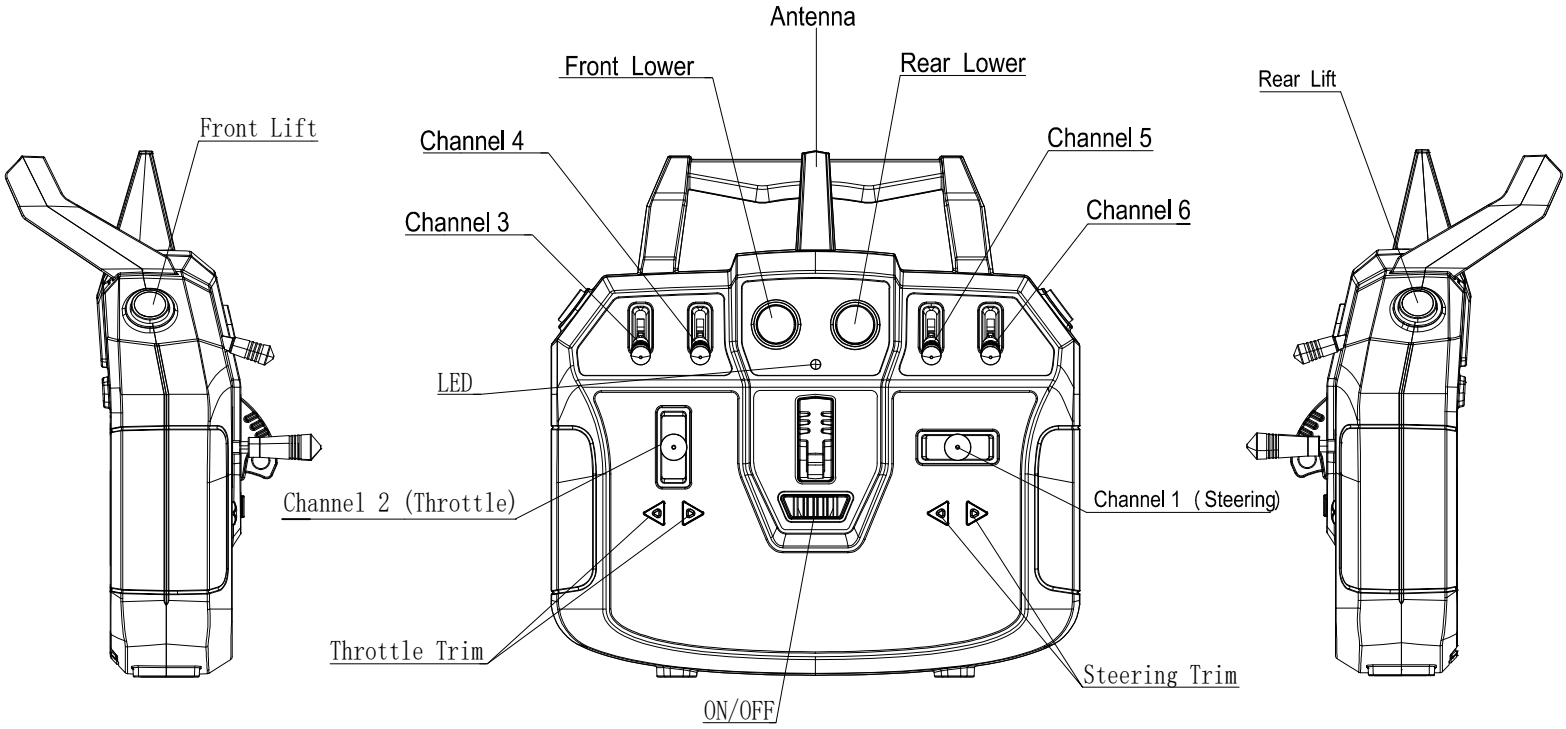

MLR6 Functions	
Channel 1 (Steering)	Steering Move left to turn left , Move right to turn right
Channel 2 (Throttle)	Throttle Move up to drive forward, Move down to apply brake and drive in reverse
Channel 3	Raises / Lowers left front wheel
Channel 4	Raises / Lowers right front wheel
Channel 5	Raises / Lowers left rear wheel
Channel 6	Raises / Lowers right rear wheel
Front Lower	Drops front of car to lowest position
Rear Lower	Drops rear of car to lowest position
Front Lift	Lifts front of car to full height .Used for hopping
Rear Lift	Lifts rear of car to full height
Throttle Trim	Adjusts the mid-position of the throttle
Steering Trim	Adjusts the mid-position of the Steering
Antenna	Used to connected to the signal of transmitter
ON/OFF	Switch used to turn to the transmitter on or off
LED	Indicates the transmitter is on or off, indicates the throttle trim and steering trim, instruction for EPA to set up. The above operation will be accompanied by sound prompts

Caution :Do not pull or tie the receiver antenna into a knot .Never cut the receiver antenna

INSTALLING THE TRANSMITTER BATTERIES

This transmitter requires 4 AA batteries.

1.Open the battery cover from the transmitter.

2.Install the batteries as shown.

3.Close the battery cover.

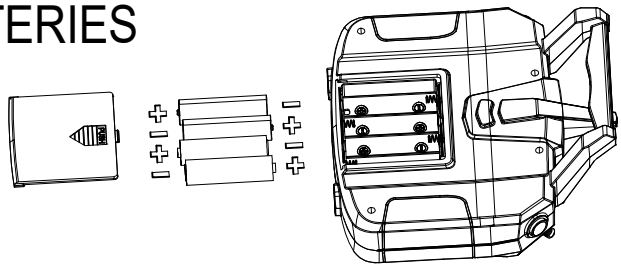

ESC SPECIFICATIONS

Model: MLR6-RX

Operating environment: 2.4GHz Redcat Protocol

Dimensions (LxWxH): 31.8mm x 26mm x 18.7mm)

Antenna Length: 60mm

Channels: 6

Weight: 21.6 grams

Band: 2.4GHz

Voltage Range: 6– 8.4V

Bind Type: Bind Plug

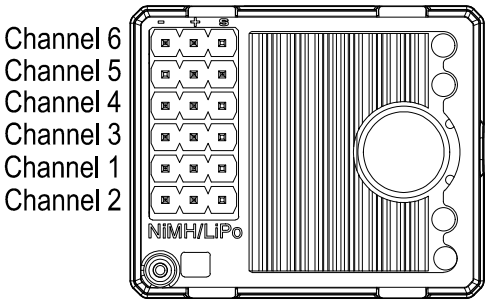

10A-2in1 BINDING:

1.Insert the bind plug into the channel 1 of ESC.

2.Power on the ESC, the LED will flash rapidly to indicate it is in bind mode

3.Push the the steering lever to right endpoint and hold up, then power on the transmitter; the LED on the transmitter will flashing, the LED on the ESC stops flashing and lights will be turn off. indicate that the binding procedure is completed.

ESC ANTENNA

Do not kink, cut or damage the antenna wire. The antenna is made of a coaxial wire; if the outer sheath becomes damaged, the ESC will not work properly. If the antenna is damaged in any way, replace the antenna before attempting to use the ESC.

Installation when a motor controller is used

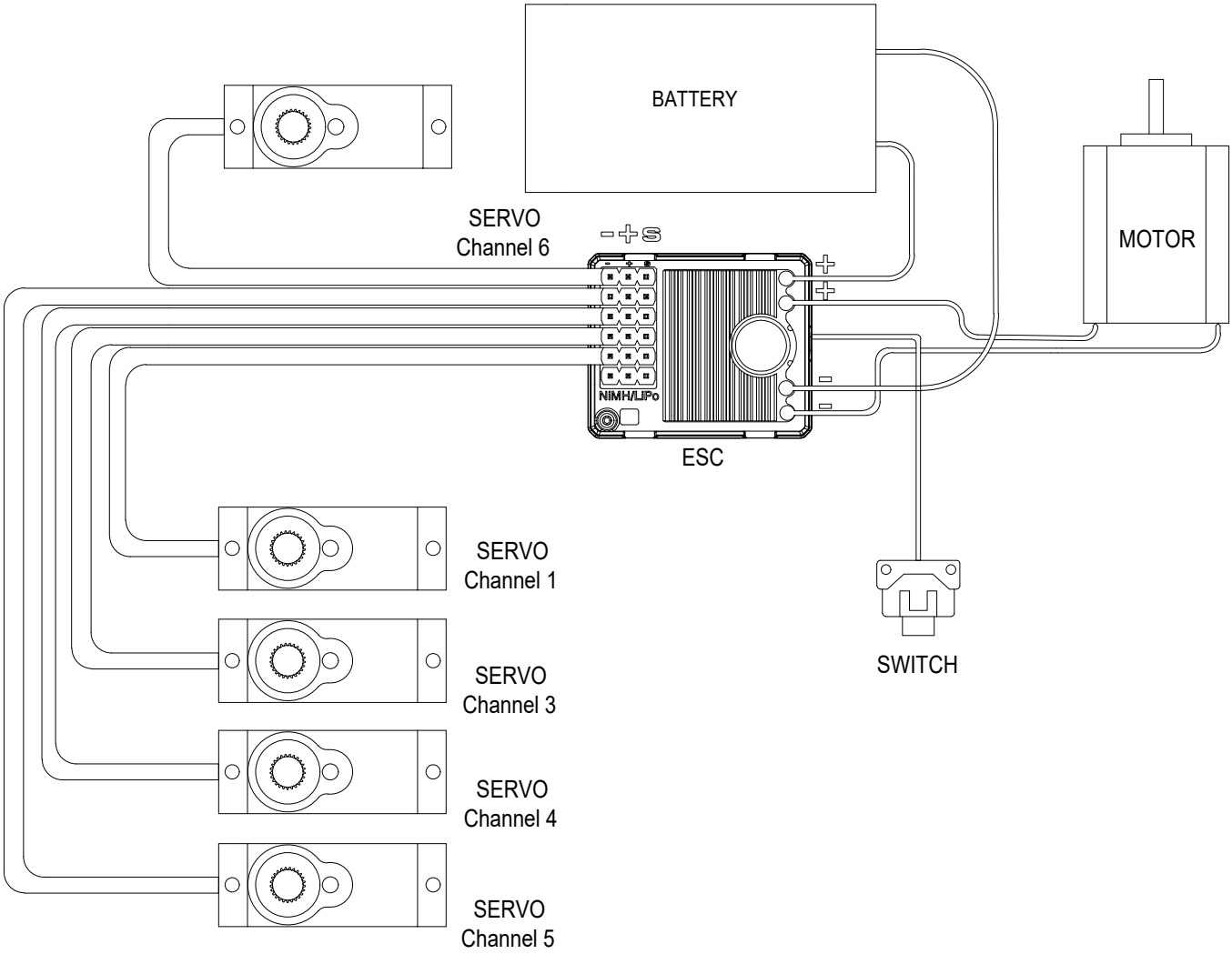

EPA parameters and Inverse Setup Description

Enter the EPA settings

Put the sticks at the middle points which are CH3, CH4, CH5 ,CH6. Hold the steer stick at the right endpoint and the throttle stick at the CCW endpoint, Power on the radio.
the LED will flash quickly. indicate EPA Setup status
Release the steer stick and throttle stick. At this time, you can select the channel which need to adjusted .

3CH 4CH 5CH and 6CH are in the middle position

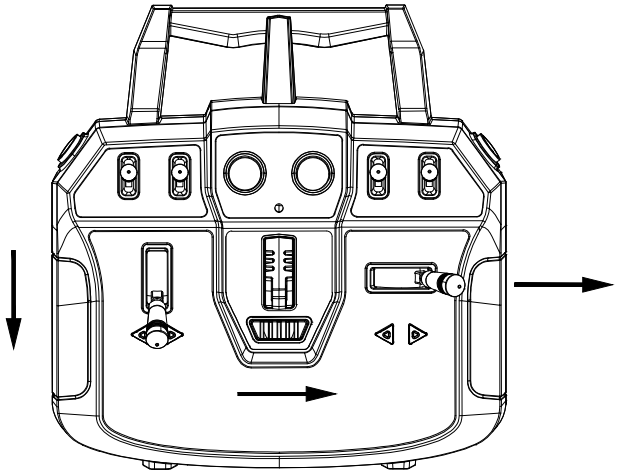

EPA of selecting the channels and inverse

Move the stick (which need be adjusted) to corresponding endpoint (only a stick to select every time, other sticks must be middle position,) and click " (Front Lift) " to enter adjusting EPA, LED becomes on if the sticks move to up for Throttle,CH3, CH4, CH5 and CH6, and right for steer; otherwise LED becomes off) The times of tones of "B" is equal to the channel number that you selected . If you want to inverse the stick, you need move the stick back and forth between two endpoints. The LED will flash once with a long tone of "B", if you want to inverse again, you need to move the stick back and forth again once.

3CH 4CH 5CH 6CH throttle and steering all can be adjusted

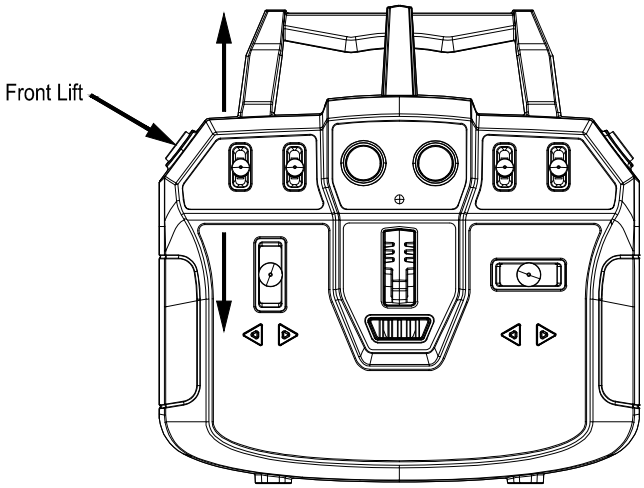

For example when you choose to enter the CH3.you push the stick at up or down endpoint.when you push the button .you will hear three tones of "B" .if you want to inverse the 3CH
you need move the stick back and forth between two endpoints The LED will flash once with a long tone of "B"

EPA regulation of 3CH 4CH 5CH 6CH Throttle and Steering

After finishing selection of channel, Click "Rear Lower (right face button) " to increase the EPA value; and Click "Front Lower (left face button) " to decrease the EPA value; (The LED will flash once and you will hear a tone of "B". until the EAP becomes max value (There will no tones fo "B" when you push the button again) . if need to adjust too many, you hold the button being pushed down.

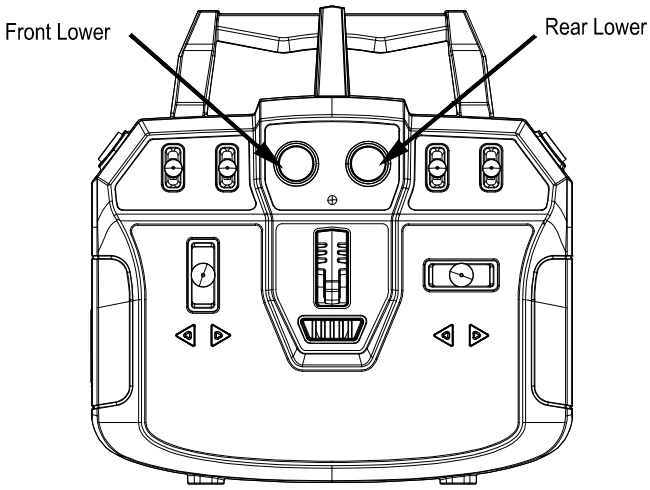

EPA of Saving and trimming

After finishing the EPA adjustments. Put the stick at the middle point. Click "Rear Lift" to save the EAP parameters. The LED will flash quickly again to wait to select another stick. if LED flashes slowly, it indicate the stick do not return to middle point.
If you want to adjust EPA of other sticks, you operate as steps of 4-6.Exit the procedure of EPA setup by simultaneously push down the "THR TRIM+" and "STR TRIM-". Then the LED becomes on to start up normally(The LED will flash once with a tone of "B") .

When you make the mid-position adjustments to the throttle and steering .you need to push the THR TRIM- .THR TRIM+. STR TRIM- and STR TRIM+.(Each time you push the button ,The LED will flash once with a tone of "B").There is a long tone of "B" at the middle position

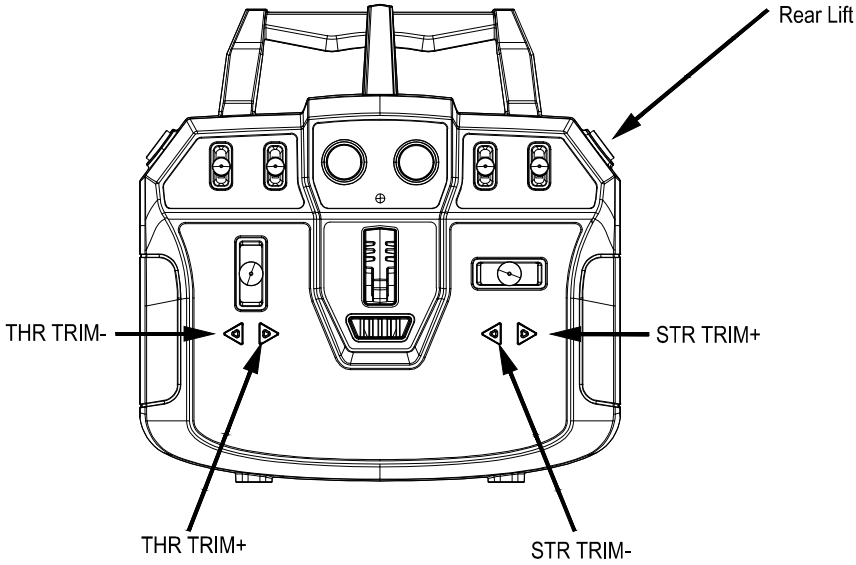

Factory Reset Operation

Factory Reset Operation: Hold the throttle stick at brake endpoint , steer stick at left end point and push down"Rear Lift" simultaneously, power on transmitter, The LED flashes four times slowly. when the LED becomes on.you will hear a tone of "B" .the operation is successful.

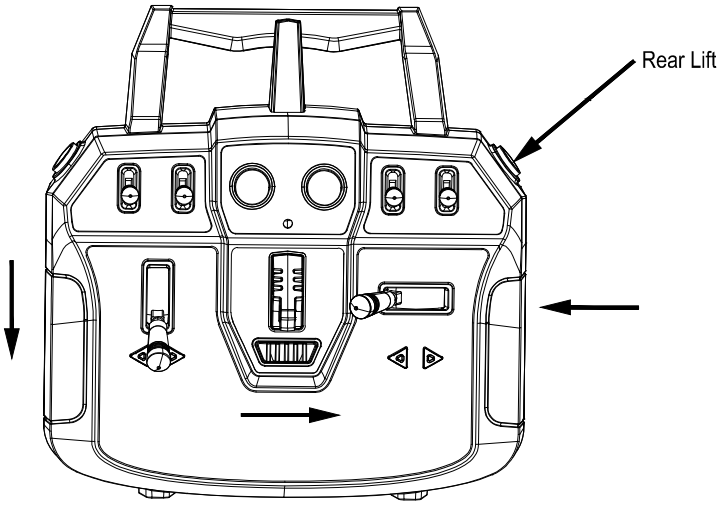

Exchanging the mode

Normally power on the transmitter, When you push down the "Front Lower "and" Rear Lower", LED will flash once with a tone of "B" ,indicate Mode1 (" Front Lower" and " Rear Lower" as same as old version); If the LED flash two times with two tones of "B" , indicate Mode2("Raise right" and "Raise Left"for new version).Operation of alternating mode

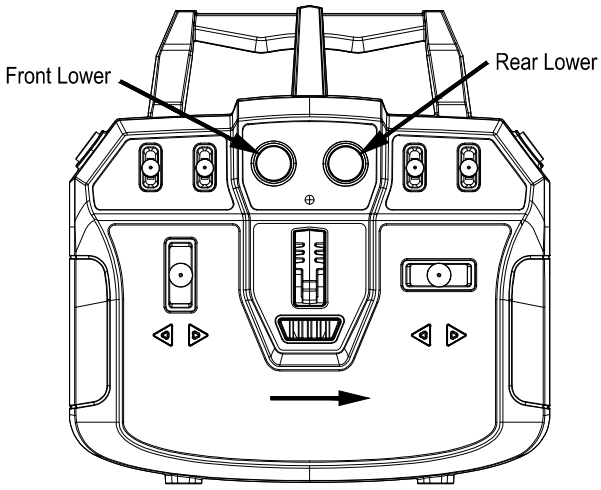

10A-2in1 BINDING:

1.Insert the bind plug into the channel 1 of ESC.

2.Power on the ESC, the LED will flash rapidly to indicate it is in bind mode

3.Push the the steering lever to right endpoint and hold up, then power on the transmitter; the LED on the transmitter will flashing, the LED on the ESC stops flashing and lights will be turn off. indicate that the binding procedure is completed.

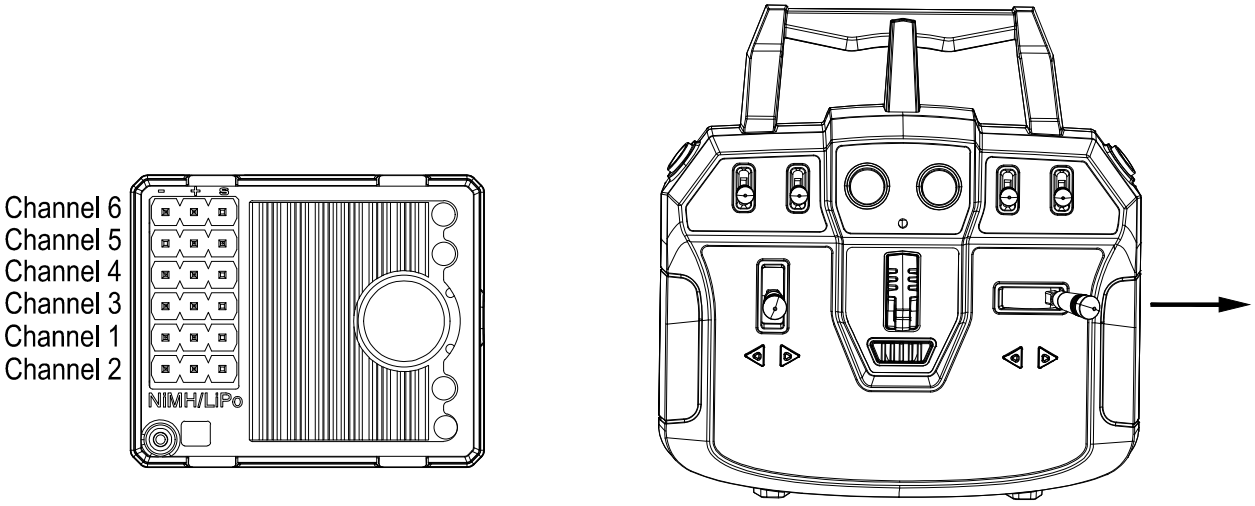

Federal Communications Commission (FCC) Statement.

This device complies with part 15 of the FCC Rules. Operation is subject to the following two conditions:

(1) This device may not cause harmful interference, and

(2) this device must accept any interference received, including interference that may cause undesired operation.

Note: This equipment has been tested and found to comply with the limits for a Class B digital device, pursuant to part 15 of the FCC Rules. These limits are designed to provide Reasonable protection against harmful interference in a residential installation. This equipment generates, uses and can radiate radio frequency energy and, if not installed and used in accordance with the instructions, may cause harmful interference to radio communications. However, there is no guarantee that interference will not occur in a particular installation. If this equipment does cause harmful interference to radio or television reception, which can be determined by turning the equipment off and on, the user is encouraged to try to correct the interference by one or more of the following measures:

•Reorient or relocate the receiving antenna.

•Increase the separation between the equipment and receiver.

•Connect the equipment into an outlet on a circuit different from that to which the receiver is connected.

•Consult the dealer or an experienced radio/TV technician for help.

Warning: Changes or modifications not expressly approved by the party responsible for compliance could void the user's authority to operate the equipment.

Note: The manufacturer is not responsible for any radio or TV interference caused by unauthorized modifications to this equipment. Such modifications could void the user’s authority to operate the equipment.

RF exposure statement:

RF Exposure Information SAR compliance is based on a separation distance of 0 mm between the unit and the body of the user.The use of holsters and similar accessories should not contain metallic components in its assembly, the use of accessories that do not satisfy these requirements may not comply with FCC RF exposure requirements, and should be avoided.