User Manual

ATUM

The Essence of Atum

According to Egyptian mythology, **ATUM** was the beginning of all things, the creator of the universe who emerged from the primordial waters of chaos. He symbolized order, perfection and renewal.

Inspired by this powerful deity, **ATUM** is not just a fragrance diffuser designed for your car or home, but a high-end sensory experience that makes every journey unforgettable. Just as **ATUM** brought light and order to chaos, our device infuses a touch of luxury and harmony into the chosen environment. Its elegant and sophisticated design combines with advanced technology to create a high-class olfactory experience.

With **ATUM**, every day becomes a moment of pleasure, where the beauty of design meets the serenity of a fragrant and enveloping atmosphere.

More than just a diffuser, **ATUM** is a statement of luxury and refinement. Its advanced technology ensures a consistent and delicate fragrance release, never overpowering but always present, creating an atmosphere of comfort and sophistication. The LED ring and sleek design seamlessly integrate into any high-end vehicle interior or luxury furniture, enhancing its aesthetic without disruption.

With a selection of premium fragrances, **ATUM** allows you to personalize your environment to reflect your style and mood. Whether you seek a fresh scent or a warm and relaxing aroma, **ATUM** adapts to your preferences, ensuring that every moment spent near it is just pure olfactory pleasure.

Designed for those who appreciate the finer details, **ATUM** transforms every journey into a sensory experience.

Index

1. Atum
2. Manual Overview
3. General Warnings
4. Safety and Use
4.1 Specific Warnings
5. Product Description
6. Use
6.1 Intended Use
6.2 Unintended Use
7. Residual Risk
8. Principle
9. Before using ATUM
10. Device Description
11. Package Contents
12. Charging
13. Device Use - Instruction
13.1 Preparation
13.2 Turning the Device On / Off
13.3 Operation
13.4 Fragrance Emission
13.5 Battery Level
13.6 Liquid Level
13.7 Replacing the Bottle
14. Cleaning and Maintenance
15. To Know
16. Frequently Asked Questions (FAQ)
17. Glossary
18. More information
19. Technical Specifications
20. CE Certification
21. FCC Certification

1. Atum

The **ATUM** Fragrance Diffuser is designed to enhance your olfactory experience by filling your enviroment with your favorite scents. Combining advanced technology with an elegant and compact design, it ensures a seamless and enjoyable aromatic journey every time you turn it on.

With its easy-to-use interface and multiple operating modes, the diffuser allows you to customize the intensity of the fragrance. Its efficient diffusion system ensures even distribution throughout the room or vehicle.

The device securely fits within your car or home interior, offering safe and reliable performance while on the road. The built-in LED ring and intuitive display screen provide real-time information about battery life, fragrance level and emission settings, ensuring a hassle-free experience.

ATUM Fragrance Diffuser transforms every environment into a refreshing and pleasant place.

2. Manual Overview

This manual contains proprietary information and may not be disclosed, even in part, to third parties without the written authorization of Fatromed S.r.l.
The company declares that:

- The information contained here in is consistent with the technical and safety specifications of the product.
- A certified copy of this manual is stored in the technical documentation file maintained at the manufacturer's premises.
- The company does not acknowledge any documentation not produced or distributed by itself or by an authorized representative.
- The technical file is retained for the legally required period (10 years); during this time, the documentation may be requested by the purchaser or regulatory authorities.
- After this period, it is the responsibility of the product owner to ensure that both the product and its documentation comply with the current regulations at the time of inspection.
- It is mandatory to read the entire manual before performing any operation, with particular attention to sections describing required procedures.

Ensure this manual is the latest version and in your preferred language for optimal safety and to avoid potential issues. Store it in a dry place for the device's lifetime and read all instructions carefully. To request a copy, contact us through the designated channels on the websites:
www.atumdiffuser.com / www.atumworld.com.

3. General Warnings

In the event of missing or illegible documentation, even partially, immediately contact the manufacturer before performing any operation involving or related to the device.

The instructions in this manual must be read and fully understood before operating, maintaining, or performing any activity involving the device.

All interventions must be carried out in strict accordance with the specified procedures and the general and specific safety guidelines provided.

Each country may have its own safety regulations. In the event of discrepancies between this manual and local regulations, local laws and regulations shall prevail.

WARNING: ANY USE THAT DOES NOT COMPLY WITH THE INSTRUCTIONS PROVIDED IN THIS MANUAL, INCLUDING THE USE OF NON-ORIGINAL ACCESSORIES, TAMPERING, OR NON-COMPLIANCE WITH SAFETY STANDARDS, MAY RESULT IN DAMAGE TO PROPERTY OR PERSONS AND WILL VOID THE WARRANTY.

THE MANUFACTURER SHALL NOT BE HELD LIABLE FOR DAMAGES OR INJURIES RESULTING FROM IMPROPER USE OF THE DEVICE.

4. Safety and Use

⚠ **Before using the device read carefully the general safety recommendations**

1. Keep the device out of reach of children and pets to prevent accidental misuse or ingestion .
2. Do not use the diffuser while driving to avoid distractions. Adjust settings before starting your journey.
3. Avoid direct contact with eyes. If fragrance liquid comes into contact with your eyes, rinse with clean water and seek medical advice if irritation persists.
4. Do not operate the device with wet hands to prevent the risk of electrical hazards or malfunction.
5. Use only the provided tools for charging. Using other tools may result in reduced battery life or damage to the device.
6. Avoid placing the device in direct sunlight or near heat sources such as car heaters or dashboards.
7. Use only authorized fragrances formulated specifically for this device to prevent clogging and ensure optimal performance.
8. If the device or charging cable is damaged, do not use it. A damaged cable or unit should be replaced immediately.
9. Do not disassemble or modify the device. Unauthorized repairs may result in malfunction or void the warranty.
10. Do not use the diffuser in humid environments, as excessive moisture may cause damage internal components.
11. Ensure proper ventilation when using the device to allow even fragrance distribution and maintain air quality.
12. Always disconnect the device from power before cleaning or performing maintenance to avoid potential electrical hazards.
13. Never leave ATUM connected to the car when the engine is off. This could lead to the car battery draining.
14. Never turn ATUM upside down to avoid fragrance leakage and other similar issues.

4.1 Specific Warnings

Avoid direct contact with water to prevent potential damage to internal components.

Ensure the fragrance bottle is securely installed before use to prevent leaks or malfunctions.

Do not expose ATUM to extreme temperatures, such as prolonged direct sunlight, as this may impair the device's performance.

Ensure that the air circulation of ATUM is not obstructed to maintain consistent fragrance diffusion.

For optimal fragrance diffusion, avoid using ATUM with open windows or with the air recirculation system activated, especially during the first few minutes of use.

If the fragrance is too intense or unpleasant, ventilate the vehicle and select a different fragrance for the next use.

Do not clean ATUM with water or liquid detergents. Only use the provided cleaning products.

Do not drop ATUM: impacts or shocks may cause internal damage, compromising performance and voiding the warranty.

Always inspect the fragrance bottle for visible damage before use. A damaged bottle may affect device performance and cause leaks.

Do not expose ATUM to high temperatures or excessive humidity, as this may affect both device and fragrance performance.

5. Product Description

The product is an **electric and electronic fragrance diffuser** for vehicles/indoor environments, featuring an **LCD screen** that displays the fragrance diffusion speed, available fragrance level, and battery charge status.

The fragrance bottle is screwed into the device via a dedicated, accessible compartment on its underside. The bottle is recognized through an **RFID tag** containing a chip and antenna that interacts with the RFID reader using radio waves, transmitting the stored information, which is then displayed on the LCD screen.
The device is equipped with two **diffusion fans** that can be set to **3 different speeds**, and an internal **Venturi system** that enhances fragrance distribution. It is powered by a **rechargeable internal battery.**

It effortlessly fragrances environments up to **21 m².**

For more details, visit the product page:

www.atumdiffuser.com / www.atumworld.com.
The product is not a toy. Use is permitted for children (under 14 years of age) and persons with limited cognitive and physical abilities only under adult supervision.

6. Use

6.1 Intended Use

The device is designed to be used as an **electric fragrance diffuser** for the following areas of application:

- Automotive
- Domestic
- Corporate

6.2 Unintended Use

Any use other than the ones described in the **INTENDED USE** section is not authorized.
It is also strictly prohibited to:

- Submerge or immerse the device in water or any other liquids.
- Use the device for applications not specified in this manual.
- Use the device with non-compliant power supply lines for battery charging.
- Allow children (under 14 years old) to use the device for recreational purposes without adult supervision.
- Make the product available to persons with limited cognitive abilities who might misuse it in a dangerous manner.
- Disassemble, modify, and/or tamper with the device.
- Pull the device to disconnect the charging cable; always grasp the USB connector to remove it from the socket.
- Insert objects into the fragrance diffusion holes.
- Place or put heavy objects on the dome of the device.
- Use the device if it is malfunctioning or has fallen into water.

THE MANUFACTURER CANNOT BE HELD LIABLE FOR ANY INCIDENTS OR DAMAGES ARISING FROM UNINTENDED USE OF THE DEVICE. ANY UNAUTHORIZED USE ALSO RESULTS IN THE INVALIDATION OF THE WARRANTY.

7. Residual Risk

During the design phase, the manufacturer conducted a comprehensive risk analysis of the product covered in this document. As a result of this analysis, certain inevitable risks have been identified due to their inherent nature. These risks have been individually examined, and the manual emphasizes instructions on how to avoid them. Therefore, it is crucial that any user responsible for the use and maintenance of the device has read the manual beforehand.

THE MANUFACTURER CANNOT BE HELD LIABLE FOR ANY INCIDENTS OR DAMAGES ARISING FROM UNINTENDED USE OF THE DEVICE, DUE TO NEGLIGENCE ON THE PART OF THE USER.

In particular:

- Any modification to the product is strictly prohibited. Any damage to persons, animals, or property resulting from the use of a modified device by an unauthorized operator will exempt the manufacturer from all responsibility.
- Keep this manual carefully as it is essential for the proper and safe use of the product.
- If the external structure of the product shows sharp edges or perforations due to accidental impact that make it hazardous, contact authorized support and follow their instructions.
- Keep the product packaging and wrapping away from children. Dispose of them according to the applicable recycling regulations. Packaging should never be placed near the mouth or nose, as there is a choking hazard.
- The device is not a toy and, under no circumstances, should it be made available to children (under 14 years of age) without adult supervision. There is a strangulation risk.
- Keep the device away from people with impaired abilities (those with reduced capacity to assess risks).

Important:

- Do not wet the electrical connections with water or other liquids.
- Maintenance operations described in the manual are required.
- Maintenance must be performed according to the instructions in the manual.

Operations Involving Risks to the Operator

Follow general safety regulations when using the device. In particular:

- When working on electrical components, ensure they are not under hazardous voltage (device connected to a power system).

Although solutions have been implemented during the design phase to ensure the safe use of the device throughout all stages-transport, setup, operation, and maintenance, some residual risks to operators and the environment remain. These risks are not completely eliminated due to technological limitations (device reliability) and managerial difficulties (excessive elimination challenges). Consequently, the following residual risks are indicated, such as electric shock, etc.

8. Principle

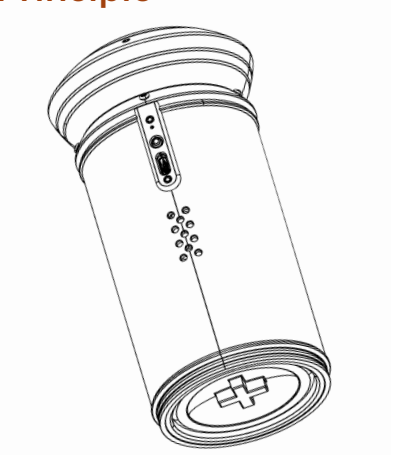

ATUM operates through an advanced fan-based diffusion system, enhanced by the Venturi effect, ensuring a consistent and refined in-car olfactory experience.

When activated, the airflow accelerates through a specially designed channel, creating a pressure drop that smoothly and evenly draws out the fragrance.

The scent is stored in a custom glass bottle with a microchip that identifies the essence, brand, and remaining level.

As air flows, the fragrance is subtly and continuously released into the cabin. Intensity can be adjusted via fan speed, allowing personalized diffusion based on user's preferences.

Optimized for enclosed spaces, the system maximizes scent duration and minimizes waste.

9. Before using ATUM

Check for Physical Damage
Verify the device, cable, and charger are intact and undamaged.

Position ATUM in a Stable Location
Place ATUM securely, avoiding unstable, hot, or vibrating areas.

Avoid Direct Sunlight or Heat Sources
Keep away from sunlight or heat sources to prevent damage.

Ensure Proper Ventilation
Ensure airflow isn't blocked inside the vehicle.

Check the Fragrance Bottle
Verify the fragrance bottle is correctly inserted and secure.

Initial Charging
Fully charge the device before initial use.

Deactivate Air Recirculation
Turn off air recirculation for better scent diffusion.

Position the Device Within Reach
Position the device within reach, without causing distraction.

Avoid Soft Surfaces
Do not place ATUM on soft materials that may block the airflow.

Avoid Humid Environments
Humid conditions could lead to malfunctions.

Check Battery Level
Ensure sufficient charge before use.
If electromagnetic interference occurs:

- Stop use.
- Contact support.

THE MANUFACTURER IS NOT LIABLE FOR DAMAGES CAUSED BY IMPROPER USE OF THE DEVICE.

10. Device Description

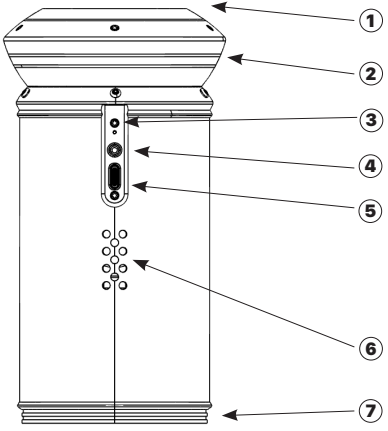

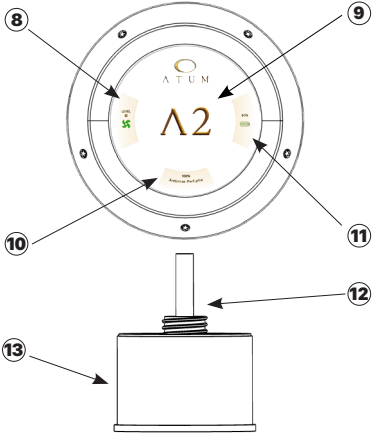

The **ATUM** Fragrance Diffuser is designed with advanced features to provide a seamless and customizable aromatic experience inside your vehicle. Here's the list with the device's key components:

1. **Display** – Shows battery, fragrance code, liquid level, and fan speed for precise control.
2. **LED Ring** – Customizable colors with visual feedback.
3. **Status LED** - Indicates the various device statuses.
   a) Solid red LED: Device charging
   b) Flashing blue LED: Check for fragrance bottle
   c) Solid blue LED: Device is on and operating correctly
4. **Power Button** – On/off, settings adjustment, and fragrance intensity control.
5. **USB-C Port** – The main structure of the diffuser houses the internal components and features a USB-C charging port for efficient and fast charging. The durable design ensures stability while in use.
6. **Air Vents** – Openings designed to allow airflow from the internal fan, ensuring the even distribution of fragrance inside the vehicle. Proper ventilation enhances the diffusion of the scent.
7. **Bottle Cavity** – The compartment where the fragrance bottle is securely placed, ensuring proper connection for fragrance diffusion and automatic recognition of the bottle.
8. **Fragrance Intensity** – Shows the strength of the scent, expressed in fan levels (1 to 3). Higher fan levels release a stronger fragrance.
9. **Fragrance Code** – Displays the unique code of the fragrance currently in use (e.g., A1, A2, etc.).
10. **Fragrance Brand** – Name of the fragrance automatically read by the chip on the bottle's bottom.
11. **Battery Level** – Shows the remaining battery percentage, alerting when it's low and needs charging.
12. **Absorbent Stick** – Internal component which absorbs the fragrance from the glass bottle.
13. **Fragrance Bottle** – Bottle containing the chosen fragrance.

11. Package Contents

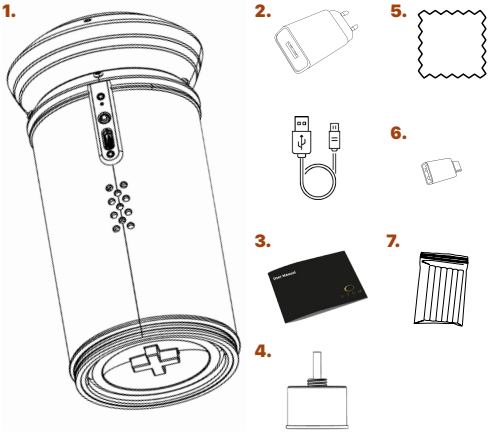

Inside the packaging, you will find everything needed to start using your **ATUM** Fragrance Diffuser:

1. **ATUM Fragrance Diffuser** - The main device designed to enhance your journey with customizable scents.
2. **USB-C Charger** - Includes USB-A and USB-C ports with both USB-A to USB-C and USB-C to USB-C cables.
3. **User Manual** - A detailed guide to help you set up, operate and maintain **ATUM**.
4. **Fragrance Bottle** - A pre-filled glass bottle containing a high-quality fragrance, ready to use with the diffuser.
5. **Cleaning Cloth** - A soft, microfiber cloth for cleaning **ATUM**.
6. **USB/USB - C Adapter** - A small and practical adapter to avoid compatibility issues.
7. **Backup Sticks** - Small package with 6 backup absorbent sticks.

12. Charging

WARNING:

- Keep the charging cable away from walkways and water sources.
- Fully charge the device before first use.

How to Charge:

- Charge for ~5 hours before first use; the battery reaches full capacity after 2-3 full cycles.
- Connect the USB-C cable to the device, then to a USB power source (charger, PC, car, power bank, etc.).
- The red status LED indicates charging; it turns off when charging is complete (~3 hours).
- Disconnect the cable once fully charged.

12.1 Discharge & Recharge

For best performance, fully discharge and recharge the battery during the first uses.

12.2 Cable Connection

Use the provided USB-C cable and connect it to a stable power source (USB-A or USB-C). Ensure consistent voltage.

12.3 Charging Time

Full charge takes about 3 hours, depending on the power source.

12.4 Battery Indicator

The display shows battery percentage while charging. Once fully charged, it indicates 100% charge, and the status LED changes from red to blue.

12.5 Battery Care

Use only the provided cable/adapter and avoid extreme temperatures when charging.

13. Device Use - Instruction

13.1 Preparation

A Charging: Charge ATUM for about 3 hours using the provided tools.For initial uses, avoid partial charging (refer to chapter 12).

B Remove the glass fragrance bottle from the packaging.

C Unscrew the cap, insert the absorbent stick into the bottle, ensuring it reaches the bottom fully.

D Insert the bottle into the device's compartment and screw it in clockwise until it is securely fixed.

E Fragrance Recognition: The system automatically detects the fragrance via the chip in the bottle, displaying the type, brand, and name on the screen.

13.2 Turning the Device On / Off

A Press the power button for 1 second to turn on the device. The power LED (blue light) will light up to confirm activation, accompanied by a sound indicating it is powered on.

B If the power LED (blue light) flashes, check that the fragrance bottle is properly inserted. Remove and reinsert the bottle if necessary.

C Hold the power button for at least 4 seconds. The dome will lower, and the device will emit a sound before turning off.

D The device will automatically turn off after 20 minutes of operation to preserve the battery and fragrance life.

13.3 Operation

A Power On and LED Ring Customization

Turn on ATUM; the LED ring cycles through the colors blue, purple, white, red, and green. To select a color, press the power button when the LED ring displays it.

13.4 Fragrance Emission

Once activated, the screen will displaying:

- **Fragrance code** (e.g., A1, A2... A9).
- **Fan level** (1 to 3), representing the fragrance intensity (Fig. Fan Level).
- **Battery Level**, to monitor the charge status.

Press the power button to reduce fan intensity (cycles through levels). Each session lasts 20 min. Hold button (4 sec) to stop it.

Fig. Fan level

13.5 Battery Level

- Red bars indicate low charge; alerts at 30% and 10%.
- Automatic shutdown around 10–15% to protect battery.

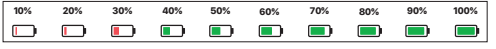

13.6 Liquid Level

Displayed as a % (±10% accuracy) to indicate when to replace the bottle.

13.7 Replacing the Bottle

Replace the fragrance bottle empty.

- Turn off the device.
- Remove the empty bottle.
- Insert absorbent stick into new bottle and screw in place (do not over-tighten).

WARNING:

The manufacturer is not liable for damages caused by incompatible power supplies or non-compliant electrical systems.

14. Cleaning and Maintenance

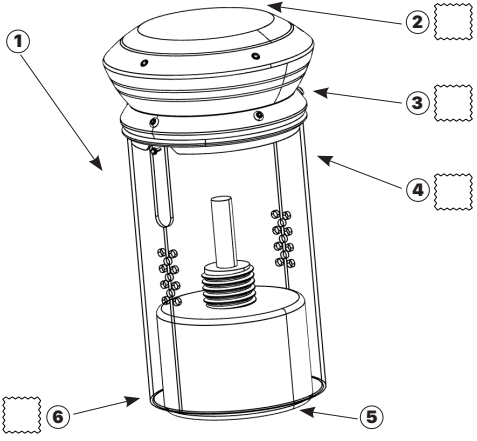

Maintenance must be performed by personnel familiar with this manual. Ensure at least 200 lux lighting in the workspace. Always disconnect the device before cleaning.
Wipe surfaces with a dry or slightly damp cloth; neutral cleaners are allowed. Always use the provided microfiber cloth.

ATTENTION:

- Do not use alcohol, solvents, or abrasive cleaners.
- Do not use abrasive cloths.

Follow general safety regulations during maintenance.

1. Do not apply water or cleaners directly on the device.
2. Use separate cloths for body and display.
3. Clean the dome-body gap to prevent buildup.
4. Replace the fragrance bottle following setup steps.
5. Clean the compartment only with the provided tools.
6. Replace the absorbent stick periodically for best performance.

15. To Know

Tips

1. **Optimize Fragrance Diffusion** – Keep windows closed and turn off air recirculation for the first few minutes to ensure optimal scent diffusion.
2. **First Charge for Maximum Performance** – Fully charge **ATUM** before first use; allow full discharge/recharge cycles for battery longevity.
3. **Fragrance Recognition** – Microchip in each bottle enables automatic scent type, brand, and liquid level detection.
4. **Adjusting Intensity** – Use fan speed settings to control fragrance strength. Reduce intensity for a lighter scent.
5. **Preserving Battery Life** – If using **ATUM** frequently on high settings, keep a charger in the car to avoid unexpected shutdowns.
6. **Preventing Residue** – If frequently changing fragrances, allow time for the system to clear residual scents.

Pratices to Avoid

1. **Overpowering Fragrance** – If the scent feels too strong, open the windows to air out the car and adjust the intensity to a lower setting for future use.
2. **Fragrance Mixing** – When switching to a new fragrance, traces of the previous scent may linger. To minimize this, let the device rest between changes.
3. **Battery Drain** – Never leave **ATUM** connected to the car's USB port when the engine is off, as it may drain the vehicle's battery over time.
4. **Ineffective Diffusion** – If the fragrance doesn't seem to spread properly, check that the bottle is inserted correctly and that the absorbent stick is positioned as instructed.
5. **Temperature Sensitivity** – Extreme heat or cold may affect **ATUM**'s performance. Avoid leaving it exposed to direct sunlight or freezing conditions.

16. Frequently Asked Questions (FAQ)

1. How do I know when to charge ATUM?
The battery level is displayed on the digital screen. When it drops below 5%, the device will automatically turn off to prevent complete battery depletion.

2. Can I use other fragrances with this diffuser?
It is strongly recommended to use only fragrances formulated by the company. Other liquids may clog the system or damage the device's internal components.

3. How long does the fragrance bottle last?
At maximum intensity, the fragrance bottle provides approximately from 200 to 380 hours of continuous use. Actual duration may vary depending on the selected intensity level.

4. How do I clean the device?
Remove the glass bottle and use a soft, dry cloth to wipe the exterior. Do not use water or cleaning agents directly on the device, as this may cause damage.

5. Can I use the diffuser while charging?
Yes, the ATUM Fragrance Diffuser can be used while connected to a power source via the USB-C cable.

6. What should I do if the device does not turn on?
Plug the device in to charge and ensure the status LED is red. After at least one hour, try turning the device on and check that is working correctly. Check the battery charge level on the display; if necessary, continue charging it. If the issue persists, contact customer support for assistance.

7. Can I operate the diffuser with the bottle cap on?
No, the bottle cap must be removed before inserting the fragrance bottle into the device. If the cap is left on, the bottle cannot be screwed in.

8. Is it safe to leave the diffuser unattended?
For safety reasons, it is recommended to turn off the device when not in use and avoid leaving it unattended for extended periods.

17. Glossary

Absorbent Stick
A stick inside the fragrance bottle that absorbs and diffuses the scent into the air.

Air Recirculation
Reuses internal air; may reduce diffusion efficiency.

Automatic Power-Off
A feature that turns off the device after 20 minutes to save battery.

Charging Time
Time required for a full charge, approximately 3 hours.

Fan Speed
Adjustable; higher speeds release more scent.

Fragrance Bottle
A glass bottle containing the scent and the microchip.

Fragrance Code
Code displayed to show which fragrance is in use (e.g., A1, A2).

Fragrance Intensity
Strength of the emitted scent, adjustable via fan speed.

LED Ring
Color-changing light, illuminating the dome all-around.

Liquid Level
Percentage of fragrance liquid remaining in the bottle, shown on the display.

Microchip
Tracks fragrance type and brand in the bottle.

Power Button
Button to turn on/off the device and adjust settings.

18. More Information

Warranty 24 months

The warranty covers material and manufacturing defects for 24 months, as per applicable laws. Excludes damage from misuse, accidents, or tampering. Valid only if the device remains unopened. For assistance, contact the reseller or customer support. If eligible, the device will be repaired or replaced.

THE WARRANTY IS VOID IN CASE OF MISUSE, TAMPERING, OR IMPROPER MAINTENANCE.

OUT OF SERVICE

When the device reaches the end of its life, it must be deactivated to prevent further use, while allowing material reuse.

THE MANUFACTURER IS NOT RESPONSIBLE FOR DAMAGE CAUSED BY REUSE OF DEVICE PARTS FOR UNINTENDED PURPOSES.

THE MANUFACTURER DOES NOT GUARANTEE THE SUITABILITY OF REUSED PARTS AFTER DEVICE DEACTIVATION.

Disposal

ATUM must be disposed of according to WEEE rules - never with household waste; bring it to an authorized collection center or follow local e-waste guidelines.
The device bears the symbol required by Legislative Decree 49/2014 (Directive 2012/19/EU), indicating separate disposal.
Check the packaging's environmental label for proper instructions.

DO NOT DISPOSE OF THE DEVICE OR PACKAGING IN THE ENVIRONMENT.

THE MANUFACTURER IS NOT RESPONSIBLE FOR DAMAGE CAUSED BY NON-INTEGRAL USE OR MISUSE OUTSIDE THIS MANUAL.

THE MANUFACTURER IS NOT RESPONSIBLE FOR DAMAGE FROM PARTS USED AFTER DEVICE DISPOSAL.

Disposal of the Device WEEE

ATUM is classified as Waste Electrical and Electronic Equipment (WEEE) and must not be disposed of with household waste.

When ATUM's life ends, take it to an authorized recycling center or follow local regulations for electronic waste disposal. Proper disposal helps protect the environment and supports sustainable recycling practices.

For More Information - update of safety

Visit our official website for detailed product information, updates, and support resources.

Customer Support

For assistance or inquiries, please contact our customer support. We are here to help with troubleshooting or any questions regarding the ATUM Fragrance Diffuser.

Online shop

To purchase replacement fragrances and absorbent sticks, and other accessories use the e-commerce section of our website **www.atumdiffuser.com** / **www.atumworld.com** or visit our boutiques directly.

Boutique - Flagship

To find the addresses of our boutiques or flagship stores, please visit **www.atumdiffuser.com** / **www.atumworld.com**

More details and informations are available at

www.atumdiffuser.com **www.atumworld.com**

19. Technical Specifications

FCC ID	2BW8P-ATUM-01-USA
POWER SUPPLY	5 V DC 1A
CONNECTION FOR CHARGING	USB-C
BUNDLE ABSORPTION	Power consumption depends on fan speed. Maximum absorption is optimized for energy efficiency.
WORKING PARAMETERS	Designed for in-house and in-car use. Temperature: 0 °C to 45 °C Humidity: 30% to 70% RH (non-condensing) Pressure: 860 hPa to 1060 hPa (0.860 to 1.060 bar)
DIMENSIONS AND WEIGHT	Compact and lightweight design for easy placement inside a vehicle. Exact dimensions and weight to be specified. Height 161 mm Diameter max 84 mm Weight 1200 gr
PRODUCER'S QUALITY SYSTEM	ATUM is manufactured in Italy by Fatromed s.r.l. The Company have a QMS certificated according ISO 9001:2015 and ISO 13485:2016 quality standards.
ATUM STORAGE	Store in a cool, dry place away from direct sunlight and extreme temperatures. Avoid prolonged exposure to heat.
STORAGE'S PARAMETERS	Temperature: 0 °C to 50 °C Humidity: 20% to 80% RH (non-condensing) Pressure: 860 hPa to 1060 hPa (0.860 to 1.060 bar)
BATTERY AND CHARGING	Lipo 3,7V 2500mAh 9,25Wh Full Charge: 3h - Battery Duration: 2h of continuous use at maximum intensity*
FRAGRANCE BOTTLE CAPACITY	60ml
FRAGRANCE BOTTLE DURATION	220-380 hours estimated

* Battery life and fragrance duration may vary depending on fragrance, usage settings and environmental conditions.

20. CE Certification

Tests and Certifications CE Mark and Rohs

ATUM undergoes rigorous testing to ensure it meets the highest safety and quality standards.
It is CE certified, indicating compliance with European health, safety and environmental protection regulations.
Additionally, ATUM is RoHS compliant, which means it adheres to restrictions on the use of certain hazardous substances in electronic products. This certification ensures that the product is safe for both users and the environment, aligning with global environmental standards.

Conformity And Safety

Fatromed s.r.l. declares full compliance with the following standards and directives:

- Directive 2014/53/EU known as the "RED Directive"
- ISO/IEC 14443-4-A
- ETSI 300 330: V2.1.1
- EN55032: 2015+A11: 2020 Class B; EN55035: 2017+A11:2020
- Directive 2014/35/EU known as the "Low Voltage Directive"
- Directive 2014/30/EU known as the "Electromagnetic Compatibility Directive"
- Directive 2011/65/EU known as "RoHS"
- Delegated Directive 2015/863 amending Directive 2011/65/EU
- Directive 2012/19/EU known as "WEEE"
- Regulation (EU) 2023/988 on General Product Safety

21. FCC Certification

FCC Compliance Statement (Part 15.19)
This device complies with Part 15 of the FCC Rules. Operation is subject to the following two conditions:
a) This device may not cause harmful interference.
b) This device must accept any interference recived, including interference that may cause undesired operation.

Modifications Warning (Part 15.21)
Changes or modifications not expressly approved by the party responsible for compliance could void the user's authority to operate the equipment.

Information to the Users (Part 15.105 - Class B Digital Device)
Note: This equipment has been tasted and found to comply with the limits for a Class B digital device, pursuant to part 15 of the FCC Rules. These limits are designed to provide reasonable protection against harmful interference in a residential installation. This equipment generates, uses and can radiate radio frequency energy and, if not installed and used in accordance with the instructions, may cause harmful interference to radio communications. However, there is no guarantee that interference will not occur in a particular installation.
If this equipment does not cause harmful interference to radio or television reception, which can be determinated by turning the equipment off and on, the user is encouraged to try to correct the interference by one or more of the following measures:

- Reorient or relocate the receiving antenna.
- Increase the separation between the equipment and reciver.
- Connect the equipment into an outlet on a circuit different from that to which the reciver is connected.
- Consult the dealer or an experienced radio/TV technician for help.

RF Exposure Statement

This equipment complies with FCC radiation exposure limits set forth for an uncontrolled environment. This transmitter must not be co-located or operating in conjunction with any other antenna or trasmitter.

Designated U.S. Agent for Service of Process

- **Company Name:** FCC US Agent, LCC
- **Physical Address:** Saint Charles, IL 60174
- **Contact Phone:** 708-571-3148
- **Email:** support@fccusagent.com
- **FRN (FCC Registration Number):** 0033402884

ATUM

Owner & Iternational Distributor:

DAK LUXURY SRL
Drumul LAPUS, Nr. 108-110,
CAMERA 1, Etaj 1
013912 Bucaresti Sectorul 1,

ATUM has been designed and produced
in Italy by Fatromed s.r.l.
ATUM are trademarks registered.

www.atumdiffuser.com **www.atumworld.com**

Milano - Dubai - Los Angles - Parigi - London - Miami