RF EXPOSURE EVALUATION

FCC ID:2BWBB-SPB2601

Applicant:	**Shenzhen Youfeile Technology Co., Ltd.**
Address:	1505A, Building C, Xinghe World Phase 2, Minle Community, Minzhi Street, Longhua District, Shenzhen, Guangdong, China
Manufacturer:	**Dongguan Leka Digital Co., Ltd.**
Address:	Room 302, Building 5, No.33 Tongfu Road, Fenggang Town, Dongguan City, Guangdong Province, China
Product Name:	SOLAR POWER BANK
\Model No.:	SPB2601
Serial No.:	N/A
Model Difference:	N/A
Operation Frequency:	111kHz-205kHz
Modulation Type:	ASK
Antenna Type:	Loop Coil Antenna
Power Supply:	Input: Type-C(orange): 5V⎓3A, 9V⎓2A, 12V⎓1.5A Type-C(cable):5V⎓3A, 9V⎓2A, 12V⎓1.5A Output: USB-A(blue)：5V⎓3A, 9V⎓2.22A, 10V⎓2.25A, 12V⎓1.67A Type-c(blue):5V⎓3A, 9V⎓2.22A, 10V⎓2.25A, 12V⎓1.67A Type-c(cable):5V⎓3A, 9V⎓2.22A, 12V⎓1.67A Type-c(orange):5V⎓3A, 9V⎓2.22A, 12V⎓1.67A Lighting Cable:5V⎓2.4A wireless charging:15W solar energy:1.9W
Battery Capacity:	DC 3.7V, 50000mAh, 185Wh
Transmitting Mode:	Keep the EUT in continuously wireless charging mode
Date of Test:	Jun. 24, 2026 to Jul. 01, 2026
Date of issue:	Jul. 01, 2026

Testing procedure and testing location:

Testing Laboratory.....:	**Shenzhen ZKT Technology Co., Ltd.**
Address..... :	1/F, No. 101, Building B, No. 6, Tangwei Community Industrial Avenue, Fuhai Street, Bao'an District, Shenzhen, China
Tested by (name + signature).....:	Jim Liu
Reviewer (name + signature)..... :	Jackson Fang
Approved (name + signature).....:	Lake Xie

a. EUT mode for mobile exposure:

Test Modes:	Test Coil:	Description:
Mode 1	ANT 1	AC/DC Adapter + EUT + iPhone (Battery Status: <1%)
Mode 2		AC/DC Adapter + EUT + iPhone (Battery Status: 50%)
Mode 3		AC/DC Adapter + EUT + iPhone (Battery Status: >98%)

b. EUT mode for portable exposure:

Test Modes:	Test Coil:	Description:
Mode 1a	ANT 1	EUT + iPhone (Battery Status: <1%)
Mode 2a		EUT + iPhone (Battery Status: 50%)
Mode 3a		EUT + iPhone (Battery Status: >98%)

TABLE OF CONTENTS

1. Measuring Standard 5
1.1 KDB 680106 D01 Wireless Power Transfer v04 5
1.2 Measurement Uncertainty 5
2. Requirements 5
2.1 Requirement: 5
3. Method Of Measurement 5
3.1 Applicable Standard 5
3.2 Block diagram of Test Setup 5
3.3 For mobile exposure conditions: 6
3.4 For portable exposure conditions: 6
3.5 Limits for Maximum Permissible Exposure (MPE): 6
3.6 Test Procedure: 6
4. Test instrument and equipment list 7
4.1 Test Instruments list 7
4.2 Test auxiliary equipment list 7
5. Test Result 8
5.1 For portable exposure result (Test mode 1a to 3a recorded) 8
5.2 For mobile exposure result (Test mode 1 to 3 recorded) 14

1. Measuring Standard

1.1 KDB 680106 D01 Wireless Power Transfer v04

1.2 Measurement Uncertainty

The reported uncertainty of measurement y ±U, where expended uncertainty U is based on a standard uncertainty multiplied by a coverage factor of k=2, providing a level of confidence of approximately 95 %.

No.	Item	Uncertainly
1	H-filed	±0.93dB
2	E-filed	±0.51dB

2. Requirements

2.1 Requirement:

$1.1310: The criteria listed in the following table shall be used to evaluate the environment impact of human exposure to radio frequency (RF) radiation as specified in $1.1307(b), except in the case of portable devices which shall be evaluated according to the provisions of FCC part2.1093 of this chapter.

3. Method Of Measurement

3.1 Applicable Standard

According to S1.1307(b)(1), systems operating under the provisions of this section shall be operated in a manner that ensures that the public is not exposed to radio frequency energy level in excess of the Commission's guidelines. According to §1.1310 and §2.1093 RF exposure is calculated. According KDB 680106 D01 Wireless Power Transfer v04.

3.2 Block diagram of Test Setup

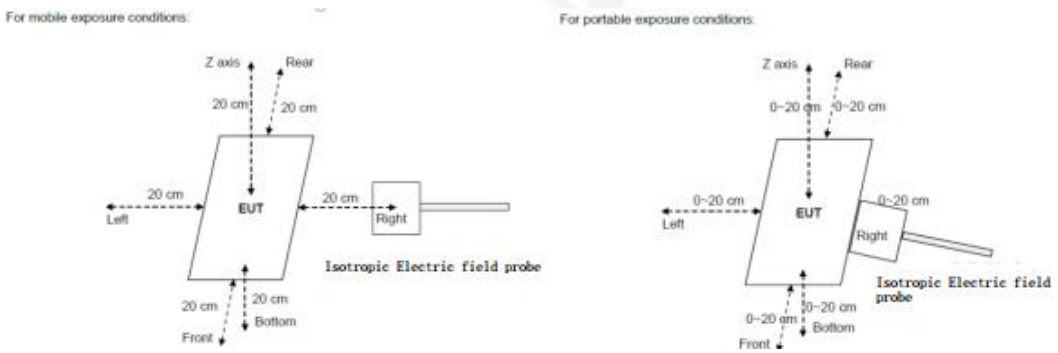

Note: Measurements should be made from all sides and the top of the primary/client pair, with the 20cm - 0cm measured from the center of the top, and 20cm - 0cm measured from the center of the rest.

3.3 For mobile exposure conditions:

a. The RF exposure test was performed in an echoic chamber;

b. E and H-field measurements should be made with the center of the probe at a distance of 20 cm surrounding the EUT and 20 cm above the top surface of the primarv/client pair;

c. The highest emission level was recorded and compared with limit;

d. The EUT was measured according to the dictates of KDB 680106 D01v04.

3.4 For portable exposure conditions:

a. The RF exposure test was performed in an echoic chamber;

b. E and H-field measurements should be made with the probe at 0 - 20 cm for all side of the EUT;

c. The highest emission level was recorded and compared with limit;

d. Perform H-field measurements for each edge/top surface of the host/client pair at every 2 cm startino from as close as possible out to 20cm.

3.5 Limits for Maximum Permissible Exposure (MPE):

Frequency range (MHz)	Electric field strength (V/m)	Magnetic field strength (A/m)	Power density (mW/cm^2)	Averaging time (minutes)
(A) Limits for Occupational/Controlled Exposures				
0.3-3.0	614	1.63	*(100)	6
3.0-30	1842/f	4.89/f	*(900/f^2)	6
30-300	61.4	0.163	1.0	6
300-1500	/	/	f/300	6
1500-100,000	/	/	5	6
(B) Limits for General Population/Uncontrolled Exposure				
0.3-1.34	614	1.63	*(100)	30
1.34-30	824/f	2.19/f	*(180/f^2)	30
30-300	27.5	0.073	0.2	30
300-1500	/	/	f/1500	30
1500-100,000	/	/	1.0	30

F=frequency in MHz
*=Plane-wave equivalent power density
RF exposure compliance will need to be determined with respect to 1.1307(c) and (d) of the FCC rules. The emissions should be within the limits at 300kHz in Table 1 of 1.1310(use the 300kHz limits for 150kHz:614V/m,1.63A/m).

3.6 Test Procedure:

1) The RF exposure test was performed on 360 degree turn table in an echoic chamber.

2) 20 cm-0cm measured from the center of the top, and 20cm-0cm measured from the center of the rest sides.

3) The turn table was rotated 360 degree to search of highest strength.

4) The highest emission level was recorded and compared with limit as soon as measurement of each points were completed.

5) The EUT were measured according to the dictates of KDB 680106 D01v04.

4. Test instrument and equipment list

4.1 Test Instruments list

Test Equipment	Manufacturer	Model No.	SN.	Cal.Date (mm-dd-yy)	Cal.Due date (mm-dd-yy)
Exposure Level Tester	Narda	ELT-400	180ZX10220	Sep. 29, 2025	Sep. 28, 2026
Magnetic field probe 100cm^2	Narda	ELT probe 100cm^2	M0675	Sep. 29, 2025	Sep. 28, 2026

4.2 Test auxiliary equipment list

Item	Equipment	Mfr/Brand	Model/Type No.	Series No.	Note
E1	SOLAR POWER BANK	N/A	SPB2601	N/A	EUT
E2	AC/DC Adapter	N/A	X569	N/A	Auxiliary
E3	iPhone	Apple	iPhone 11	N/A	Auxiliary

5. Test Result

5.1 For portable exposure result (Test mode 1a to 3a recorded)

H-Filed Strength at (distance from 6cm to 20cm at 2cm iteration) surrounding the EUT (A/m):

distance (cm)	Battery Level:	Position Left (uT)	Position Right (uT)	Position Rear (uT)	Position Front (uT)	Position Top (uT)	Position Bottom (uT)
20	<1%	0.0183	0.0181	0.0185	0.0186	0.0184	0.0183
18	<1%	0.0244	0.0243	0.0248	0.0249	0.0246	0.0244
16	<1%	0.0336	0.0334	0.0341	0.0342	0.0339	0.0336
14	<1%	0.0477	0.0475	0.0486	0.0487	0.0482	0.0477
12	<1%	0.0705	0.0703	0.0719	0.0721	0.0714	0.0705
10	<1%	0.1091	0.1087	0.1114	0.1116	0.1104	0.1091
8	<1%	0.1773	0.1767	0.1809	0.1813	0.1795	0.1773
6	<1%	0.3008	0.2997	0.3071	0.3078	0.3046	0.3008

distance (cm)	Battery Level:	Position Left (A/m)	Position Right (A/m)	Position Rear (A/m)	Position Front (A/m)	Position Top (A/m)	Position Bottom (A/m)	50% Limits (A/m)	Limits (A/m)
20	<1%	0.0146	0.0145	0.0148	0.0149	0.0147	0.0146	0.815	1.63
18	<1%	0.0195	0.0194	0.0198	0.0199	0.0197	0.0195	0.815	1.63
16	<1%	0.0268	0.0267	0.0273	0.0274	0.0271	0.0268	0.815	1.63
14	<1%	0.0381	0.0380	0.0389	0.0390	0.0386	0.0381	0.815	1.63
12	<1%	0.0564	0.0562	0.0576	0.0577	0.0571	0.0564	0.815	1.63
10	<1%	0.0873	0.0870	0.0891	0.0893	0.0884	0.0873	0.815	1.63
8	<1%	0.1418	0.1413	0.1448	0.1451	0.1436	0.1418	0.815	1.63
6	<1%	0.2406	0.2398	0.2457	0.2462	0.2437	0.2406	0.815	1.63

H-Filed Strength at (distance from 6cm to 20cm at 2cm iteration) surrounding the EUT (A/m):

distance (cm)	Battery Level:	Position Left (uT)	Position Right (uT)	Position Rear (uT)	Position Front (uT)	Position Top (uT)	Position Bottom (uT)
20	50%	0.0176	0.0178	0.0175	0.0176	0.0178	0.0176
18	50%	0.0236	0.0238	0.0234	0.0236	0.0238	0.0236
16	50%	0.0325	0.0327	0.0322	0.0325	0.0327	0.0325
14	50%	0.0463	0.0466	0.0457	0.0463	0.0466	0.0463
12	50%	0.0684	0.0690	0.0677	0.0684	0.0690	0.0684
10	50%	0.1058	0.1068	0.1048	0.1058	0.1068	0.1058
8	50%	0.1718	0.1734	0.1704	0.1718	0.1734	0.1718
6	50%	0.2914	0.2942	0.2891	0.2914	0.2942	0.2914

distance (cm)	Battery Level:	Position Left (A/m)	Position Right (A/m)	Position Rear (A/m)	Position Front (A/m)	Position Top (A/m)	Position Bottom (A/m)	50% Limits (A/m)	Limits (A/m)
20	50%	0.0141	0.0142	0.0140	0.0141	0.0142	0.0141	0.815	1.63
18	50%	0.0189	0.0190	0.0187	0.0189	0.0190	0.0189	0.815	1.63
16	50%	0.0260	0.0262	0.0257	0.0260	0.0262	0.0260	0.815	1.63
14	50%	0.0370	0.0373	0.0366	0.0370	0.0373	0.0370	0.815	1.63
12	50%	0.0547	0.0552	0.0542	0.0547	0.0552	0.0547	0.815	1.63
10	50%	0.0846	0.0854	0.0839	0.0846	0.0854	0.0846	0.815	1.63
8	50%	0.1374	0.1387	0.1363	0.1374	0.1387	0.1374	0.815	1.63
6	50%	0.2331	0.2354	0.2313	0.2331	0.2354	0.2331	0.815	1.63

H-Filed Strength at (distance from 6cm to 20cm at 2cm iteration) surrounding the EUT (A/m):

distance (cm)	Battery Level:	Position Left (uT)	Position Right (uT)	Position Rear (uT)	Position Front (uT)	Position Top (uT)	Position Bottom (uT)
20	>98%	0.0168	0.0166	0.0170	0.0173	0.0166	0.0170
18	>98%	0.0224	0.0223	0.0228	0.0231	0.0223	0.0228
16	>98%	0.0308	0.0306	0.0313	0.0318	0.0306	0.0313
14	>98%	0.0438	0.0436	0.0446	0.0454	0.0436	0.0446
12	>98%	0.0647	0.0645	0.0660	0.0671	0.0645	0.0660
10	>98%	0.1002	0.0998	0.1021	0.1039	0.0998	0.1021
8	>98%	0.1629	0.1621	0.1659	0.1688	0.1621	0.1659
6	>98%	0.2764	0.2749	0.2815	0.2863	0.2749	0.2815

distance (cm)	Battery Level:	Position Left (A/m)	Position Right (A/m)	Position Rear (A/m)	Position Front (A/m)	Position Top (A/m)	Position Bottom (A/m)	50% Limits (A/m)	Limits (A/m)
20	>98%	0.0134	0.0133	0.0136	0.0138	0.0133	0.0136	0.815	1.63
18	>98%	0.0179	0.0178	0.0182	0.0185	0.0178	0.0182	0.815	1.63
16	>98%	0.0246	0.0245	0.0251	0.0255	0.0245	0.0251	0.815	1.63
14	>98%	0.0350	0.0349	0.0357	0.0363	0.0349	0.0357	0.815	1.63
12	>98%	0.0518	0.0516	0.0528	0.0537	0.0516	0.0528	0.815	1.63
10	>98%	0.0802	0.0798	0.0817	0.0831	0.0798	0.0817	0.815	1.63
8	>98%	0.1303	0.1296	0.1327	0.1350	0.1296	0.1327	0.815	1.63
6	>98%	0.2211	0.2199	0.2252	0.2291	0.2199	0.2252	0.815	1.63

Note: A/m = uT/1.25

H-Filed Strength at (distance from 4cm to 0cm) surrounding the EUT (A/m):

distance (cm)	Battery Level:	Position Left (A/m)	Position Right (A/m)	Position Rear (A/m)	Position Front (A/m)	Position Top (A/m)	Position Bottom (A/m)	50% Limits (A/m)	Limits (A/m)
4	<1%	0.4125	0.4111	0.4212	0.4221	0.4178	0.4125	0.815	1.63
2	<1%	0.6473	0.6451	0.6609	0.6624	0.6556	0.6473	0.815	1.63
0	<1%	0.7798	0.7772	0.7962	0.7980	0.7898	0.7798	0.815	1.63
4	50%	0.3996	0.4036	0.3965	0.3996	0.4036	0.3996	0.815	1.63
2	50%	0.6271	0.6333	0.6222	0.6271	0.6333	0.6271	0.815	1.63
0	50%	0.7555	0.7630	0.7496	0.7555	0.7630	0.7555	0.815	1.63
4	>98%	0.3791	0.3770	0.3861	0.3928	0.3770	0.3861	0.815	1.63
2	>98%	0.5949	0.5916	0.6059	0.6164	0.5916	0.6059	0.815	1.63
0	>98%	0.7167	0.7127	0.7300	0.7426	0.7127	0.7300	0.815	1.63

Note: Biot-Savar law:

(1) Magnetic field on the axis of a current-carrying circle coil:

$$B = \frac{u_0 I R^2}{2(R^2+X^2)^{\frac{3}{2}}}$$

R is the coil outside diameter radius.R=0.05m

X is the distance from the test point to the center of the coil circle.X=0.2~0.08m

B is the magnetic magnetic field.

1.MECHANICAL DIMENSION (UNIT:mm)

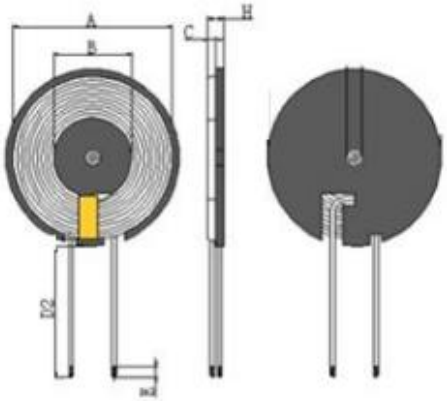

2. SCHEMATICS:

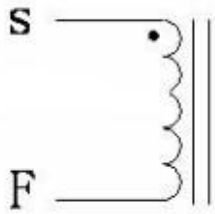

1. Attach the magnetic sheet to the coil. The magnetic sheet size is 43.5mm, thickness is 0.8±0.5mm. Cut an L-shaped groove.
2. Coil lead-out position Wrap tape 1-2 turns.
3. Adhesive on the back of the disk.

A	B	C	D2	E	H				I
43.5±0.5	20±1	0.8±0.5	40±3	3±2	1.7MAX				

the coil parameters of the EUT:
Coil1 Outer radius: 43.5±0.5mm, Inner radius: 20±1 mm
Frequency: 111-205KHz

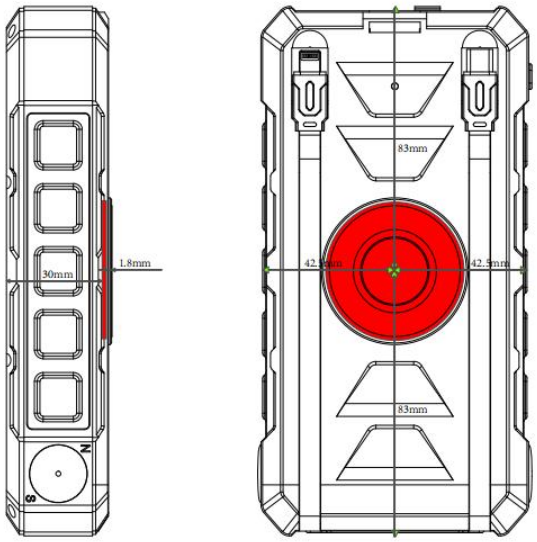

(2) According to the KDB 680106, the model needs to be validated by probe measurements at the two points closest to the surface of the device, in 2cm increments, and if there is a 30% agreement between the model and the (E-field and/or h-field) probe measurements, the validation is considered sufficient.

(3) We derived the field strengths at 10cm to 8cm and 8cm to 6cm, respectively, which are close to the actual test values, based on the field strength at 6 cm, the field strength at 4cm and 2cm and 0 cm can be deduced.

(4) A table of error data between the assessed and measured values:

distance (cm)	Measurements (A/m)	distance (cm)	Assessed (A/m)	Error (%)	Limit (%)
10	0.0829	\	\	\	\
8	0.1342	10 to 8	0.1307	2.61	<30
6	0.2289	8 to 6	0.2218	3.10	<30

(5) Calculation process:

distance (cm)	Battery Level:	Position Left (A/m)
8	<1%	0.1303
6	<1%	0.2211
4	<1%	0.3791
2	<1%	0.5949
0	<1%	0.7167

8cm: $u_0IR^2 = B * 2(R^2 + X^2)^{\frac{3}{2}} = 0.1303 * 2(0.055^2 + 0.08^2)^{\frac{3}{2}} = 0.00023845$

To 6cm: $B = \frac{u_0IR^2}{2(R^2+X^2)^{\frac{3}{2}}} = \frac{0.00023845}{2(0.055^2+0.06^2)^{\frac{3}{2}}} = 0.2211$

6cm: $u_0IR^2 = B * 2(R^2 + X^2)^{\frac{3}{2}} = 0.2211 * 2(0.055^2 + 0.06^2)^{\frac{3}{2}} = 0.00023845$

To 4cm: $B = \frac{u_0IR^2}{2(R^2+X^2)^{\frac{3}{2}}} = \frac{0.00023845}{2(0.055^2+0.04^2)^{\frac{3}{2}}} = 0.3791$

4cm: $u_0IR^2 = B * 2(R^2 + X^2)^{\frac{3}{2}} = 0.3791 * 2(0.055^2 + 0.04^2)^{\frac{3}{2}} = 0.00023848$

To 2cm: $B = \frac{u_0IR^2}{2(R^2+X^2)^{\frac{3}{2}}} = \frac{0.00023848}{2(0.055^2+0.02^2)^{\frac{3}{2}}} = 0.5949$

2cm: $u_0IR^2 = B * 2(R^2 + X^2)^{\frac{3}{2}} = 0.5949 * 2(0.055^2 + 0.02^2)^{\frac{3}{2}} = 0.000238487$

To 0cm: $B = \frac{u_0IR^2}{2(R^2+X^2)^{\frac{3}{2}}} = \frac{0.000238487}{2(0.055^2+0^2)^{\frac{3}{2}}} = 0.7167$

5.2 For mobile exposure result (Test mode 1 to 3 recorded)

H-Filed Strength at (distance from 20cm) surrounding the EUT (A/m):

distance (cm)	Battery Level:	Position Left (uT)	Position Right (uT)	Position Rear (uT)	Position Front (uT)	Position Top (uT)	Position Bottom (uT)
20	<1%	0.0186	0.0186	0.0187	0.0186	0.0185	0.0183
20	50%	0.0178	0.0176	0.0175	0.0178	0.0175	0.0173
20	>98%	0.0164	0.0165	0.0166	0.0164	0.0160	0.0158

distance (cm)	Battery Level:	Position Left (A/m)	Position Right (A/m)	Position Rear (A/m)	Position Front (A/m)	Position Top (A/m)	Position Bottom (A/m)	50% Limits (A/m)	Limits (A/m)
20	<1%	0.01488	0.01488	0.01496	0.01488	0.0148	0.01464	0.815	1.63
20	50%	0.01424	0.01408	0.01400	0.01424	0.014	0.01384	0.815	1.63
20	>98%	0.01312	0.0132	0.01328	0.01312	0.0128	0.01264	0.815	1.63

Note: A/m = uT/1.25

※※※※※ **END OF REPORT** ※※※※※