User Manual

SOLAR POWER BANK

MODEL: SPB2601

[W33]

: chargers@support20h.com

: Top Outdoor Products Support

Kindly Remind:
If you encounter a problem when using this product, but the return window has been closed. You can contact us via the Service Email (chargers@support20h.com), we will send you a Replacement or Refund.

Layout

ES: Diseño

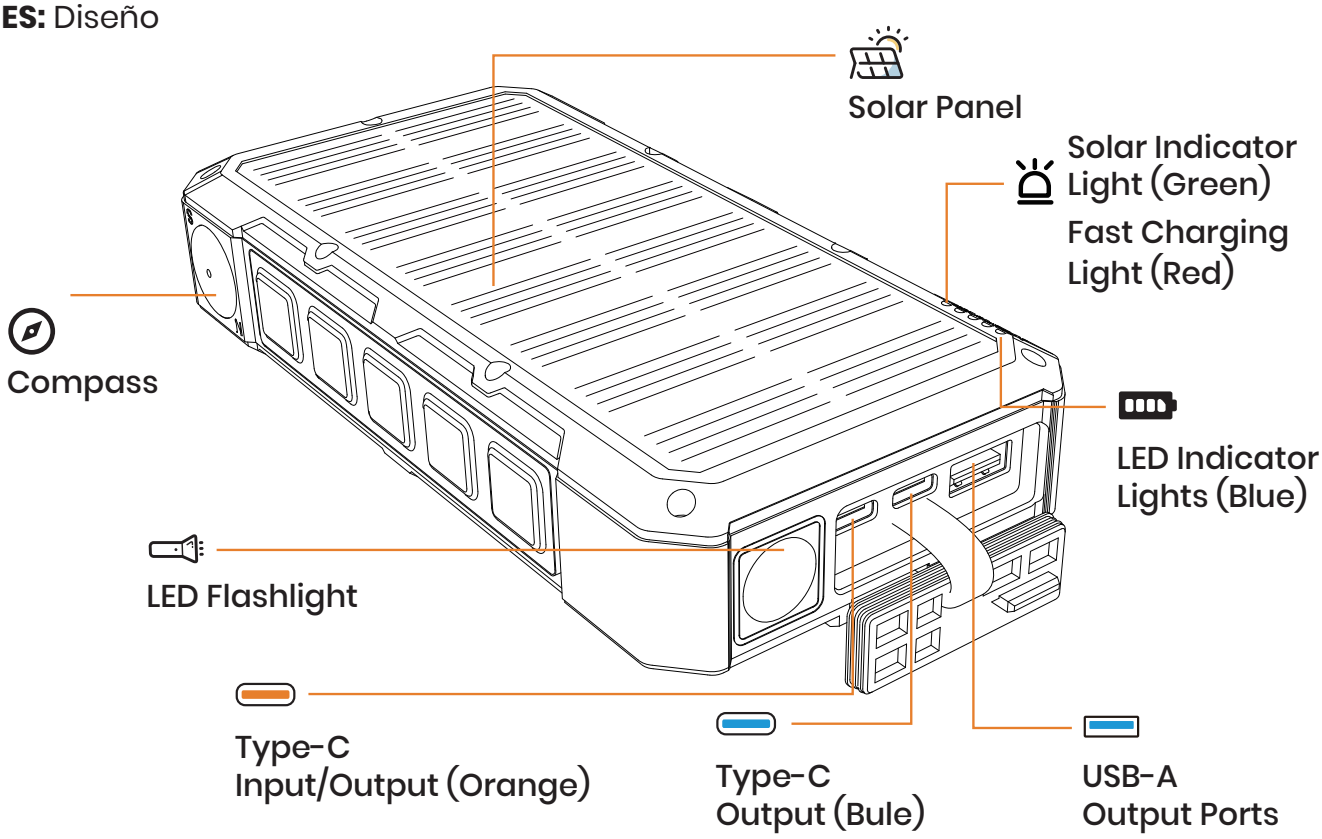

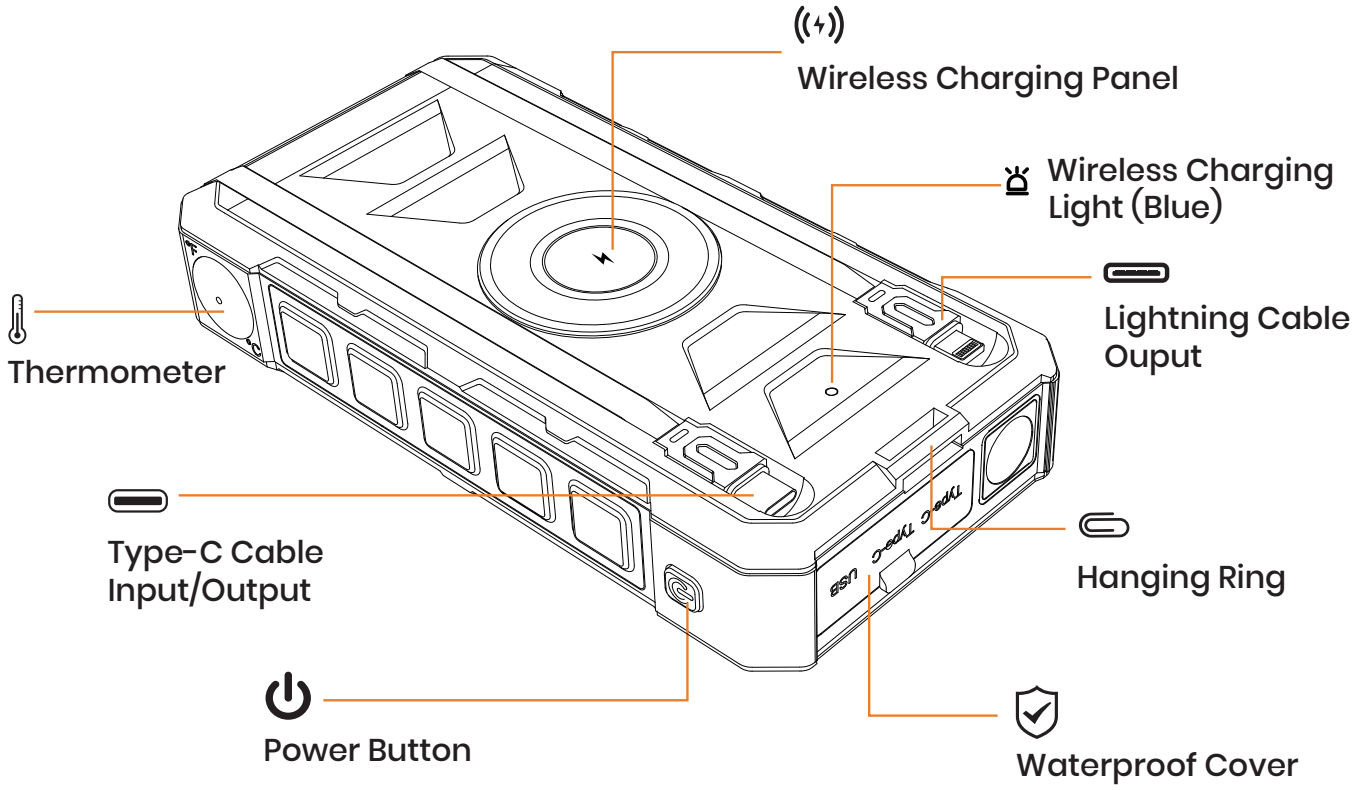

Specification

ES: Especificación

Item	SPB2601
Solar panel	1.5W
Output(Max)	Type-C Port(Orange): 5V⎓3A 9V⎓2.22A 12V⎓1.67A Type-C Cable: 5V⎓3A 9V⎓2.22A 12V⎓1.67A USB-A Port: 5V⎓3A 9V⎓2A 12V⎓1.5A 10V⎓2.25A Lightning Cable: 5V⎓2.4A Type-C Port(Blue): 5V⎓3A 9V⎓2A 12V⎓1.5A 10V⎓2.25A
Input(Max)	Type-C Port(Orange): 5V⎓3A 9V⎓2A 12V⎓1.5A Type-C Cable: 5V⎓3A 9V⎓2A 12V⎓1.5A Solar Panel: 1.5W
Wireless charger	15W(Max)
Dimensions	6.54×3.39×1.32in（166×86×33.5mm）

How to Use the Flashlight?

Press and hold the power button for 3 seconds to turn the flashlight on or off. when the flashlight is on, short press to switch between strong-SOS-strobe.

ES: Mantenga presionado el botón de encendido durante 3 segundos para encender o apagar la linterna. Cuando la linterna está encendida, presione brevemente para cambiar entre los modos: fuerte - SOS - estroboscópico.

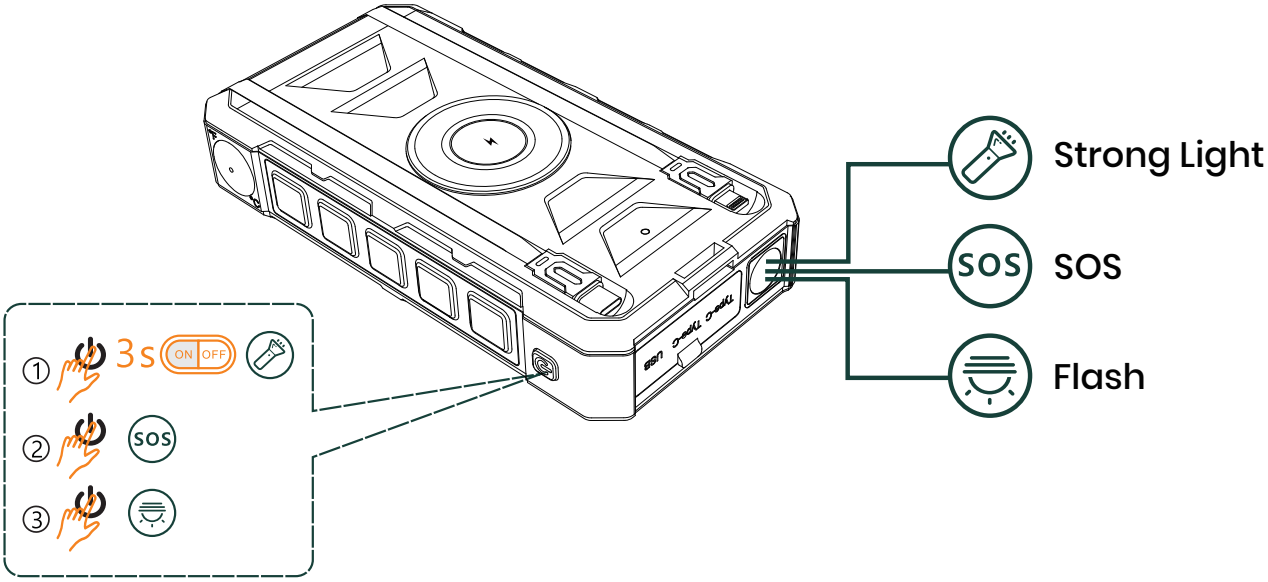

Check Remaining Power.

ES: Revisar la energia restante.

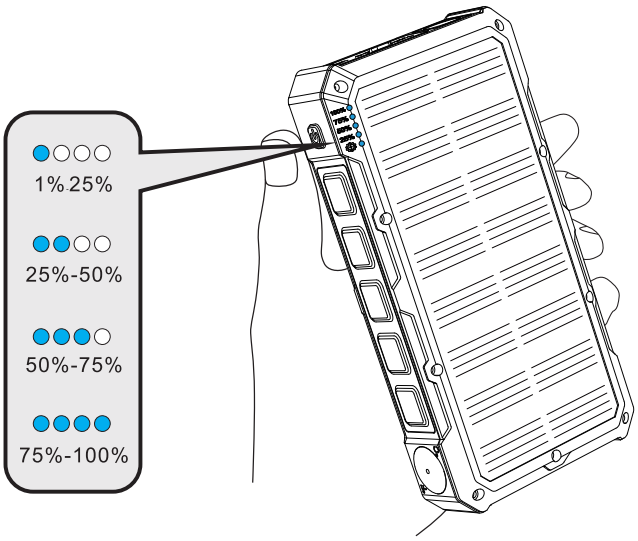

How to Recharge the Solar Power Bank?

1. By USB Cable (Use PD/QC adapter to achieve faster charging).

ES: Mediante el cable USB (Usa adaptador PD/QC para lograr una carga más rápida.).

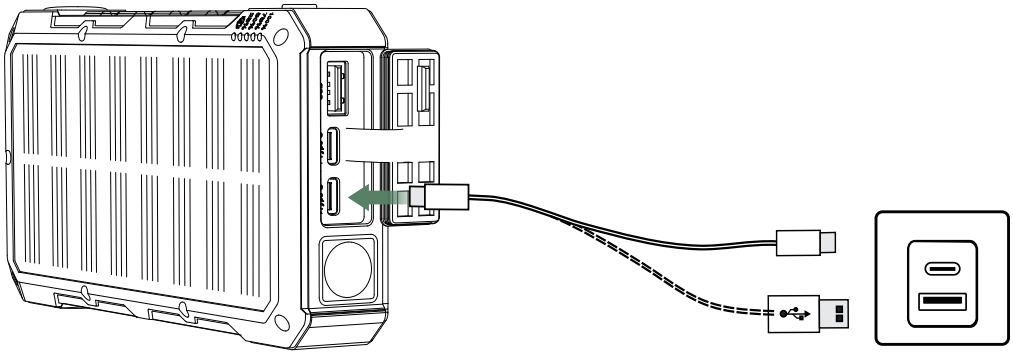

2. By Built-in USB-C Cable

ES: Por cable USB-C incorporado

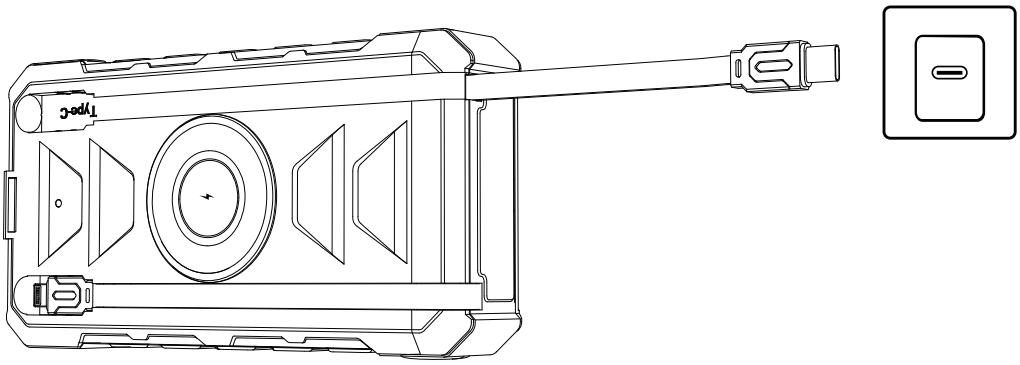

3. Solar Charging

ES: Carga solar

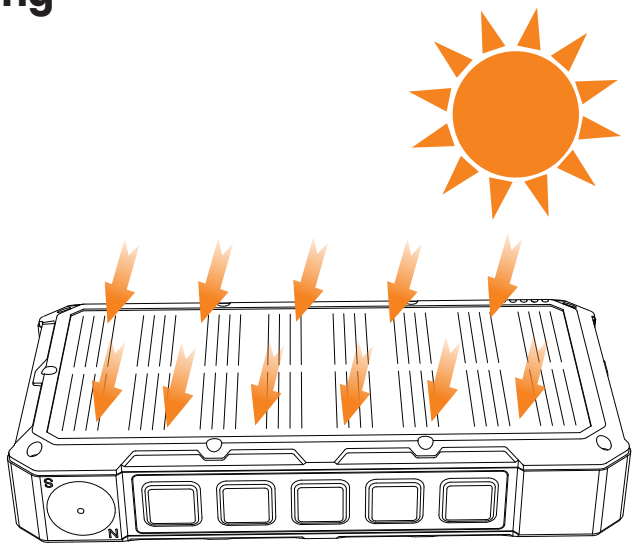

EN: Put the solar power bank outside in direct sunlight, the green light will turn on and the blue lights will flash to show that it's charging. Once all four lights are on, the charging is complete, and you can bring the solar power bank inside. Remember to keep the port cover closed when charging outdoors.

ES: Coloque el Cargador Solar afuera en la luz solar directa, la luz verde se encenderá y las luces azules parpadearán para mostrar que se está cargando. Cuando se com pleta la carga, todas las cuatro luces estarán encendidas y puede llevar el Cargador Solar adentro. Recuerde mantener la cubierta del puerto cerrada al cargar al aire libre.

Charge Your Phone or Tablet.

ES: Cargar tu teléfono o tableta.

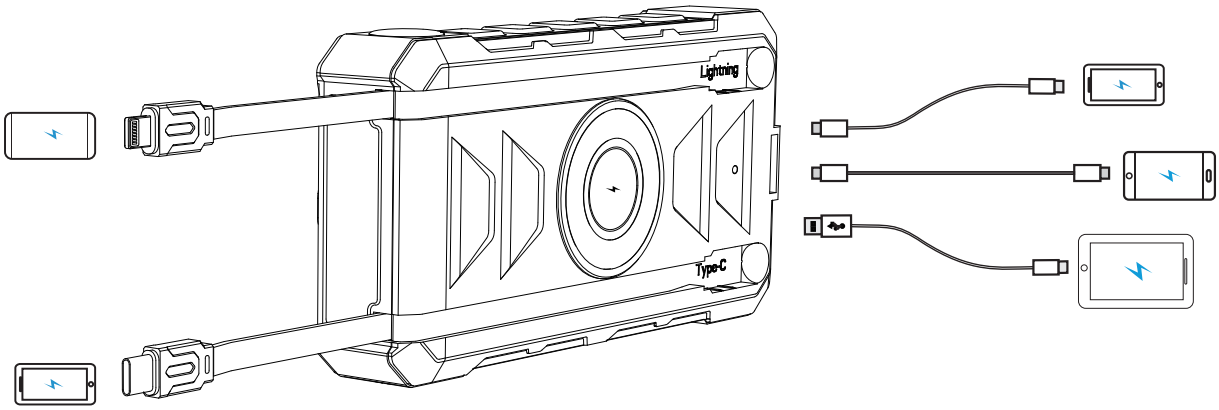

How to Charge Your Phone by Wireless Charging Function?

P.S. Your phone must be equipped with Qi charging function.

ES: ¿Cómo cargar su teléfono mediante la función de carga inalámbrica?
(P.D . su teléfono debe estar equipado con la función de carga Qi.)

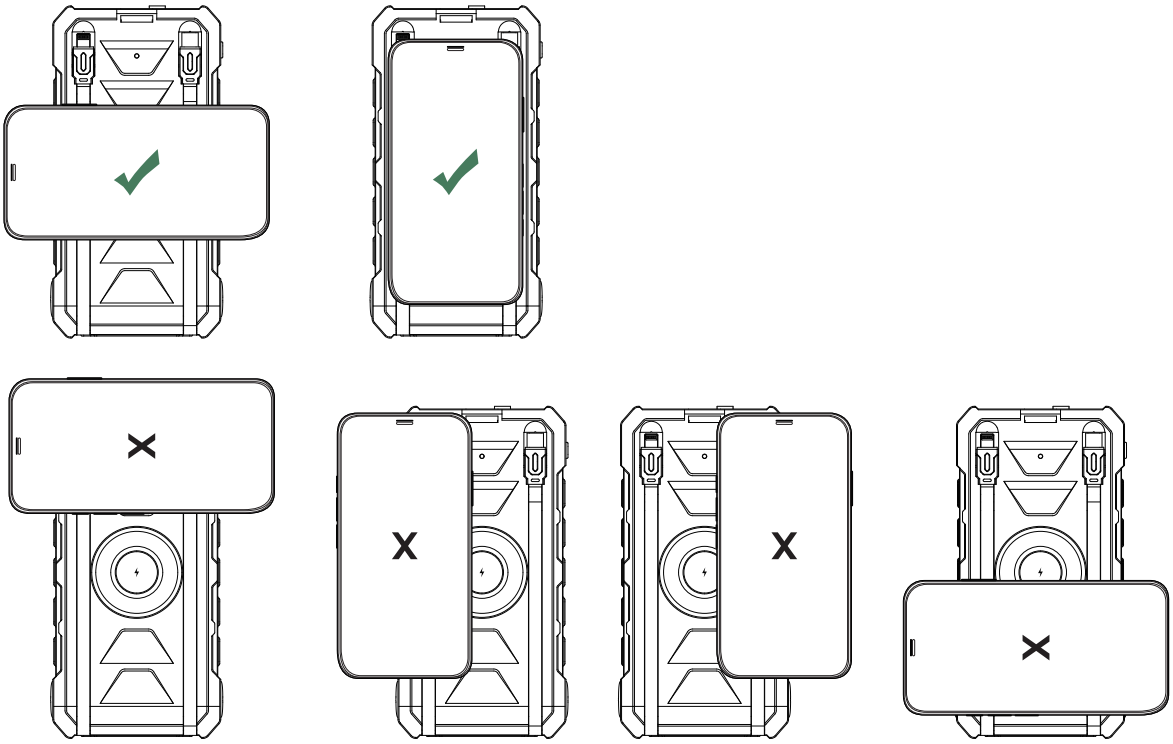

EN:

1. Press the power button to activate the wireless charging function, then place your phone on the wireless charging panel, ensuring that the center of the phone is aligned with the center of the wireless charging panel. In this way, your phone will begin charging within 2 seconds. If not, please adjust the location of the phone.
2. The distance between the phone and the wireless charging panel must be less than 3mm. If the phone case is too thick, it will affect the wireless charging function.
3. No metal objects, such as metal phone cases, coins, metal sheets, etc., should be placed between the device to be charged and the wireless charging panel.

ES:

1. Presione el botón de encendido para activar la función de carga inalámbrica, luego coloque su teléfono en el panel de carga inalámbrica, asegurándose de que el centro del teléfono esté alineado con el centro del panel de carga inalámbrica. De esta manera, su teléfono comenzará a cargarse en 2 segundos. Si no es así, ajuste la ubicación del teléfono.
2. La distancia entre el teléfono y el panel de carga inalámbrica debe ser inferior a 3 mm. Si la funda del teléfono es demasiado gruesa, afectará la función de carga inalámbrica.
3. No se deben colocar objetos metálicos, como fundas de teléfono metálicas, monedas, láminas de metal, etc., entre el dispositivo a cargar y el panel de carga inalámbrica.

Reminder

1. Fully charge the solar charger before first-time use.
2. When there is only one blue indicator light flashing, please stop charging your devices and recharge the solar charger as soon as possible.
3. When charging your phone, please use the original cable provided with your phone to ensure intelligent recognition and rapid charging.
4. To extend battery life, fully charge the unit with a wall charger every 3 months.
5. Avoid scratching the solar panels.
6. Solar charging speed is subject to sun intensity, temperature and weather conditions. Therefore, it is recommended to use it as a backup power source only.
7. Do not place the solar charger into fire or water.
8. It is normal for the solar charger to become slightly warm during charging or discharging.

ES: Recordatorio

1. Cargue completamente el cargador solar antes del primer uso.
2. Cuando solo parpadea una luz indicadora azul, deje de cargar sus dispositivos y recargue el cargador solar lo antes posible.
3. Al cargar su teléfono, utilice el cable original proporcionado con su teléfono para garantizar el reconocimiento inteligente y la carga rápida.
4. Para prolongar la vida útil de la batería, cargue completamente la unidad con un cargador de pared cada 3 meses.
5. Evite rayar los paneles solares.
6. La velocidad de carga solar depende de la intensidad del sol, la temperatura y las condiciones climáticas. Por lo tanto, se recomienda utilizarlo solo como fuente de energía de respaldo.
7. No coloque el cargador solar en el fuego o en el agua.
8. Es normal que el cargador solar se caliente ligeramente durante la carga o descarga.

WARNING

1. This product is not a toy, please keep it out of the reach of children to avoid accidents.
2. When charging the product outdoors using solar power, please bring it back inside after sunset. Humid weather at night may cause short circuits and battery failure.
3. The operating temperature of this product is **0°C~45°C (32°F~113°F)**. Please do not expose it to temperatures above **60°C (140°F)**, including areas near heat sources such as stoves or heaters.
4. This product contains a Li-polymer battery, so it is strictly prohibited to disassemble, squeeze, puncture, or expose it to water or fire, as it may damage the battery, cause short circuits, fires, or burning.
5. If there is bulging, deformation, liquid leakage, overheating, or significant power loss, please stop using it immediately, dispose of it properly, and contact us for a replacement or a full refund.

ES: ADVERTENCIA

1. Este producto no es un juguete, por favor manténgalo fuera del alcance de los niños para evitar accidentes.
2. Al cargar el producto con energía solar al aire libre, por favor lleve el producto adentro después del atardecer. El clima húmedo durante la noche puede causar cortocircuitos y fallos en la batería.
3. La temperatura de operación de este producto es de **0°C~45°C (32°F~113°F)**. Por favor no lo exponga a temperaturas superiores a **60°C (140°F)**, incluyendo áreas cercanas a fuentes de calor como estufas o calentadores.
4. Este producto contiene una batería Li-polímero, por lo que está estrictamente prohibido desmontarlo, apretarlo, perforarlo o exponerlo al agua o al fuego, ya que puede dañar la batería, causar cortocircuitos, incendios o quemaduras.
5. Si hay hinchazón, deformación, fuga de líquido, sobrecalentamiento o una pérdida significativa de energía, por favor detenga su uso inmediatamente, deséchelo correctamente y contáctenos para obtener un reemplazo o un reembolso completo.

WARNING

FCC Caution

This device complies with part 15 of the FCC Rules. Operation is subject to the following two conditions: (1) This device may not cause harmful interference, and (2) this device must accept any interference received, including interference that may cause undesired operation.

Any Changes or modifications not expressly approved by the party responsible for compliance could void the user's authority to operate the equipment.

Note: This equipment has been tested and found to comply with the limits for a Class B digital device, pursuant to part 15 of the FCC Rules. These limits are designed to provide reasonable protection against harmful interference in a residential installation. This equipment generates uses and can radiate radio frequency energy and, if not installed and used in accordance with the instructions, may cause harmful interference to radio communications. However, there is no guarantee that interference will not occur in a particular installation. If this equipment does cause harmful interference to radio or television reception, which can be determined by turning the equipment off and on, the user is encouraged to try to correct the interference by one or more of the following measures:

-Reorient or relocate the receiving antenna.

-Increase the separation between the equipment and receiver.

-Connect the equipment into an outlet on a circuit different from that to which the receiver is connected.

-Consult the dealer or an experienced radio/TV technician for help.

The device has been evaluated to meet general RF exposure requirement. The device can be used in portable exposure condition without restriction.