尺寸70*100mm
双面印刷，折页，128g铜版纸

Magnetic Wireless Power Bank

Model: PBH001

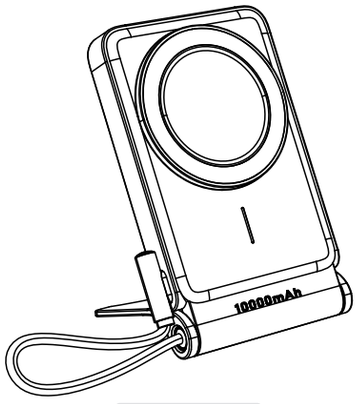

Product Manual

Overall Product Diagram

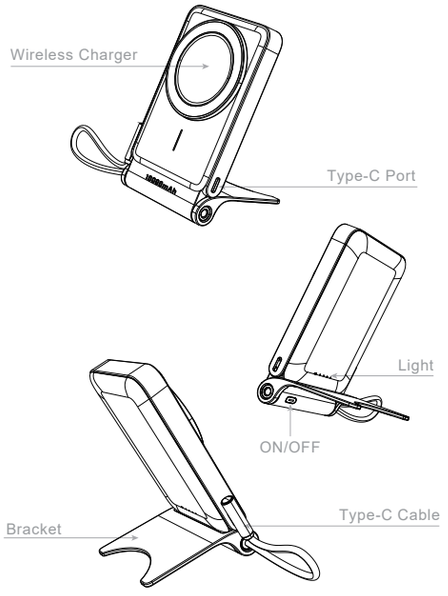

Folding Diagram

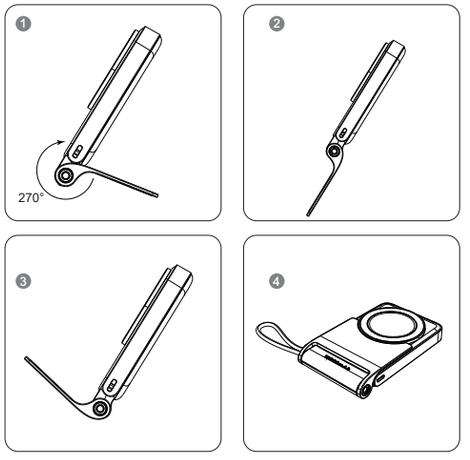

Specifications

Product Name	Magnetic Wireless Power Bank
Product Size	115.5*69.5*19mm
Energy Conversion Rate	≥75%(5V⎓2A)
Battery Capacity	10000mAh 36Wh/3.6V
Rated Capacity	5V/6000mAh, 9V/3200mAh, 10V/2600mAh, 12V/2300mAh
Operating Temperature	35℃
Type-C Input	5V⎓3A 9V⎓2A 12V⎓1.5A
Type-C Cable Output	5V⎓3A 9V⎓2A 12V⎓1.5A
Type-C Output	5V⎓3A,9V⎓2.22A, 10V⎓2.25A(SCP), 12V⎓1.67A(22.5W)
Type-C Cable Output	5V⎓3A,9V⎓2.22A, 10V⎓2.25A(SCP), 12V⎓1.67A(22.5W)
Wireless Output	5W/7.5W/10W/15W

Combined output

Type-C Output: 5V/1A+Type-C Cable Output: 5V/1A+Wireless Output: 5W
Type-C Output: 5V/2A+Type-C Cable Output: 5V/1A
Type-C Output: 5V/1A+Type-C Cable Output: 5V/2A
Type-C Output: 5V/2A+Wireless Output: 5W
Type-C Cable Output: 5V/2A+Wireless Output: 5W
Simultaneous charging and discharging
Type-C Input 5V/3A+Wireless Output 5W
Type-C Input 5V/3A+Type-C Cable Output 5V/2.6A
Type-C Input 5V/3A+Type-C Cable Output 5V/1.4A+Wireless Output 5W
Type-C Cable Input 5V/3A+Wireless Output 5W
Type-C Cable Input 5V/3A+Type-C Output 5V/0.5A
Type-C Cable Input 5V/3A+Type-C Output 5V/0.5A+Wireless Output 5W

Notes

Compatible Devices:
Please check if your phone supports wireless charging. This product supports fast wireless charging and enables short-range wireless power transfer via coil induction.
Adapter selection: When using an adapter, the wireless charger supports a 5 W load; when using an adapter compliant with the QC3.0 standard, it supports up to 15 W.
*To ensure proper charging performance, we recommend using PD fast charging or an adapter compliant with the QC3.0 standard.

⚠Warning!

Do not place metal debris or magnetic cards on the charging pad, as this may cause the charger to overheat! When an alarm is triggered, remove any foreign objects immediately!
Mild heating is normal, as phone batteries generate heat during charging!
Do not place the charger near sources of fire or corrosive environments.

Low Current Mode

Note: For products requiring low current, such as charging mobile phones, this feature has no impact.
The PBH001 portable power bank- Low Current Mode is specifically designed to charge TWS ,earphones and other small-power devices. When the Low Current Mode is disabled, even charging low-power devices will not achieve full charging. When a device's battery level reaches above 80–90%, the required power may be only a few watts; the power bank may fail to detect this and assume no power output, leading to shutdown. However, when the user enables this mode, even 0.1W of power becomes detectable, ensuring complete charging of low-power devices.

Packaging List

Magnetic Wireless Power Bank x1 | Product Manual x1

Technical Specifications for Low-Power Radio Frequency Equipment

For low-power radio frequency equipment that has obtained a certification of compliance, no company, business, or user may, without approval, arbitrarily change the frequency, increase the power, or alter the original design characteristics and functions. The use of low-power radio frequency equipment must not affect aviation safety or interfere with lawful communications; if interference is detected, the equipment must be immediately discontinued, and use may only resume after the interference has been eliminated. The term "lawful communications" as used herein refers to radio communications operated in accordance with the provisions of the Telecommunications Management Act. Low-power RF equipment must be capable of withstanding interference from lawful communications or from radio-emitting electrical equipment used for industrial, scientific, and medical purposes.

FCC Rules:
This device complies with part 15 of the FCC Rules. Operation is subject to the following two conditions: (1) This device may not cause harmful interference, and (2) this device must accept any interference received, including interference that may cause undesired operation.
FCC warning:
Any Changes or modifications not expressly approved by the party responsible for compliance could void the user's authority to operate the equipment.
Note:
This equipment has been tested and found to comply with the limits for a Class B digital device, pursuant to part 15 of the FCC Rules. These limits are designed to provide reasonable protection against harmful interference in a residential installation. This equipment generates uses and can radiate radio frequency energy and, if not installed and used in accordance with the instructions, may cause harmful interference to radio communications. However, there is no guarantee that interference will not occur in a particular installation. If this equipment does cause harmful interference to radio or television reception, which can be determined by turning the equipment off and on, the user is encouraged to try to correct the interference by one or more of the following measures:
-Reorient or relocate the receiving antenna.
-Increase the separation between the equipment and receiver.
-Connect the equipment into an outlet on a circuit different from that to which the receiver is connected.
-Consult the dealer or an experienced radio/TV technician for help.
This equipment complies with FCC radiation exposure limits set forth for an uncontrolled environment. This equipment should be installed and operated with minimum distance 0cm between the radiator & your body.

Made in China