Kinghelm®

深圳市金航标电子有限公司

Shenzhen Jinhangbiao Electronics Co., Ltd.

产 品 技 术 规 格 书

SPECIFICATION

产品型号 **PART NO:**	**KH3216-A35**
客户料号 **CUSTOMER PART NO:**	
客户确认 **CUSTOMER APPROVED BY:**	
确认日期 **APPROVED DATE:**	

RoHS Compliant Parts

深圳市龙华区民治大道1079号展滔科技大厦C座C809室Room C809, Block C, Zhantao Technology Building, No. 1079 Minzhi Avenue, Longhua District, Shenzhen

TEL：0755-83040901　FAX：0755-83040901

目　录

Table of contents

规格书版本更改记录 Version rejigger track record……3

1. 概述 Introduction……4

2. 外型尺寸及测试板焊盘尺寸 Dimensions……4～5

3. 测试电路和匹配电路 Evaluation Board and Matching Circuits……5

4. 电气性能 Electrical Characteristics……6

5. 特性曲线 Characteristic curve……6

6. 方向图 Radiation Pattern……7～8

7. 可靠性试验后允许误差 Post Dependability Tolerance ……9

8. 可靠性试验 Dependability Test……9～10

9. 回流焊温度 Reflow Soldering Standard Condition……10

10.包装尺寸 Packaging and Dimensions ……11

产品规格书版本更改记录

Version rejigger track record

版本号 Version	更改记录　Rejigger	拟制 Prepared	批准 Approve	日期 Date
V1.0	首次发行	姚富鑫	贺俊驹	2015.12.25
V1.1	更改产品尺寸公差值	陈星	贺俊驹	2017.05.24
V1.2	修正可靠性试验说明内容 8.1~8.4	姚富鑫	贺俊驹	2017.11.07

备注：

1、更改产品电性能指标时，版本号需更换（V1.0 换为 V2.0、V3.0……）；

2、更改产品测试方法（包括可靠性测试条件），或更改使用条件时，当前版本号加系列（V1.0 换为 V1.1、V1.2……）。

1. 概述　INTRODUCTION

金航标微波多层陶瓷天线 LA 系列产品设计用于 WLAN、WiFi、蓝牙、PHS，手机多频天线, FM 等小体积 SMD 片式设计。

kinghelm Microwave Multi-Layer Ceramic Antenna LA series are designed to be used in WLAN、WiFi、Bluetooth、PHS、 Multiple-band Mobile phone antenna, FM, etc and compact size SMD chip design.

2. 外型尺寸　Dimensions（Unit：r

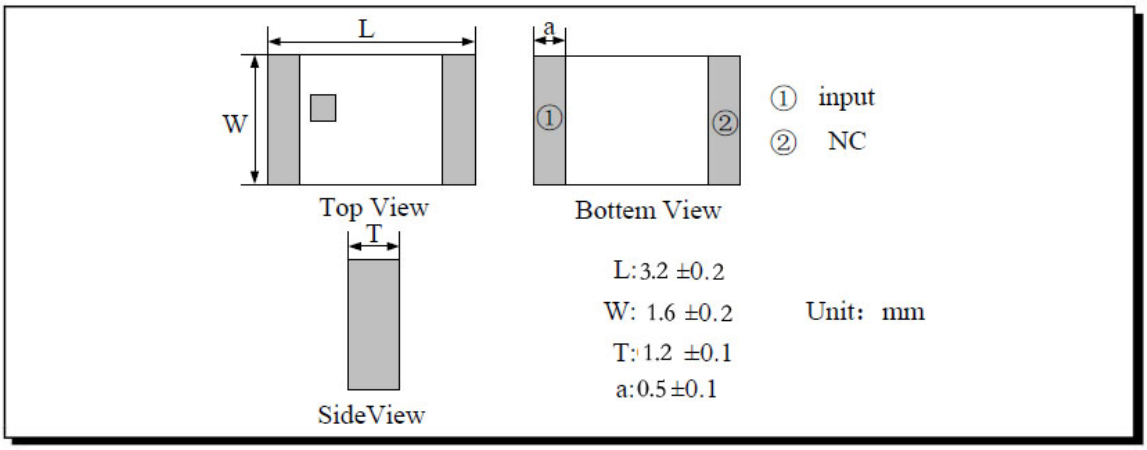

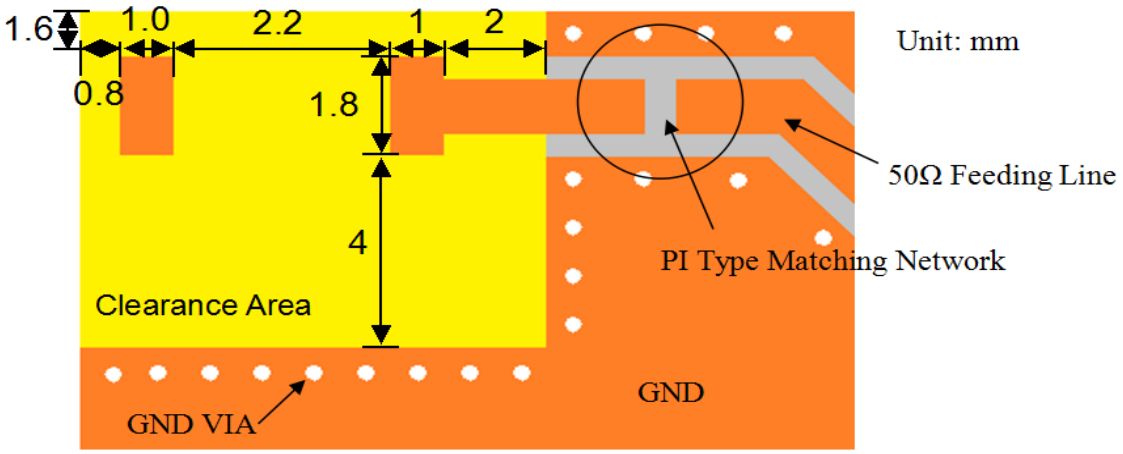

3．测试电路和匹配电路　Evaluation Board and Matching Circuits

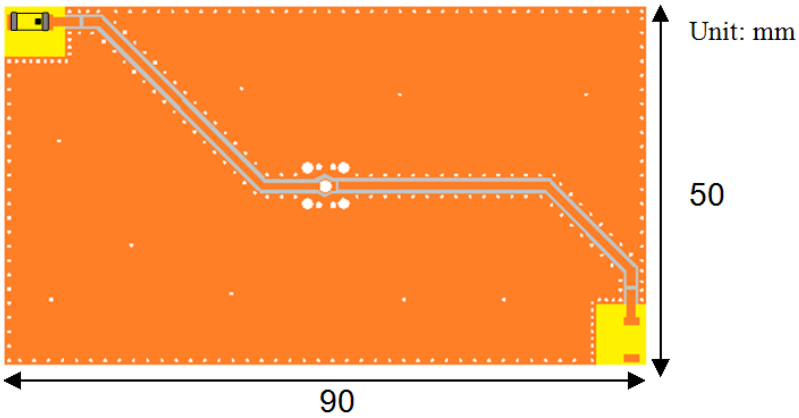

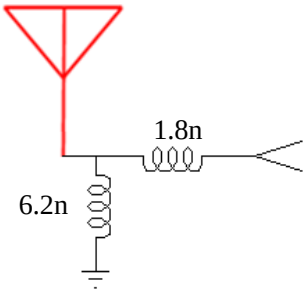

4．电气性能　Electrical Characteristics

No.	Item （项目）	Specifications （特性）
4.1	Central Frequency　中心频率(No matching)	2875MHz
	(带匹配电路测试)After Matching	2450 MHz
4.2	Band Width　通带宽度	100MHz typ.
4.3	Peak Gain　峰值增益	5.19 dBi
4.4	V.S.W.R　驻波比	≤2.0
4.5	Polarization　极化方式	Linear　线性
4.6	Azimuth Beam width　方位角	Omni-directional　全向
4.7	Impedance　阻抗	50 Ω

5．特性曲线　Characteristic curve

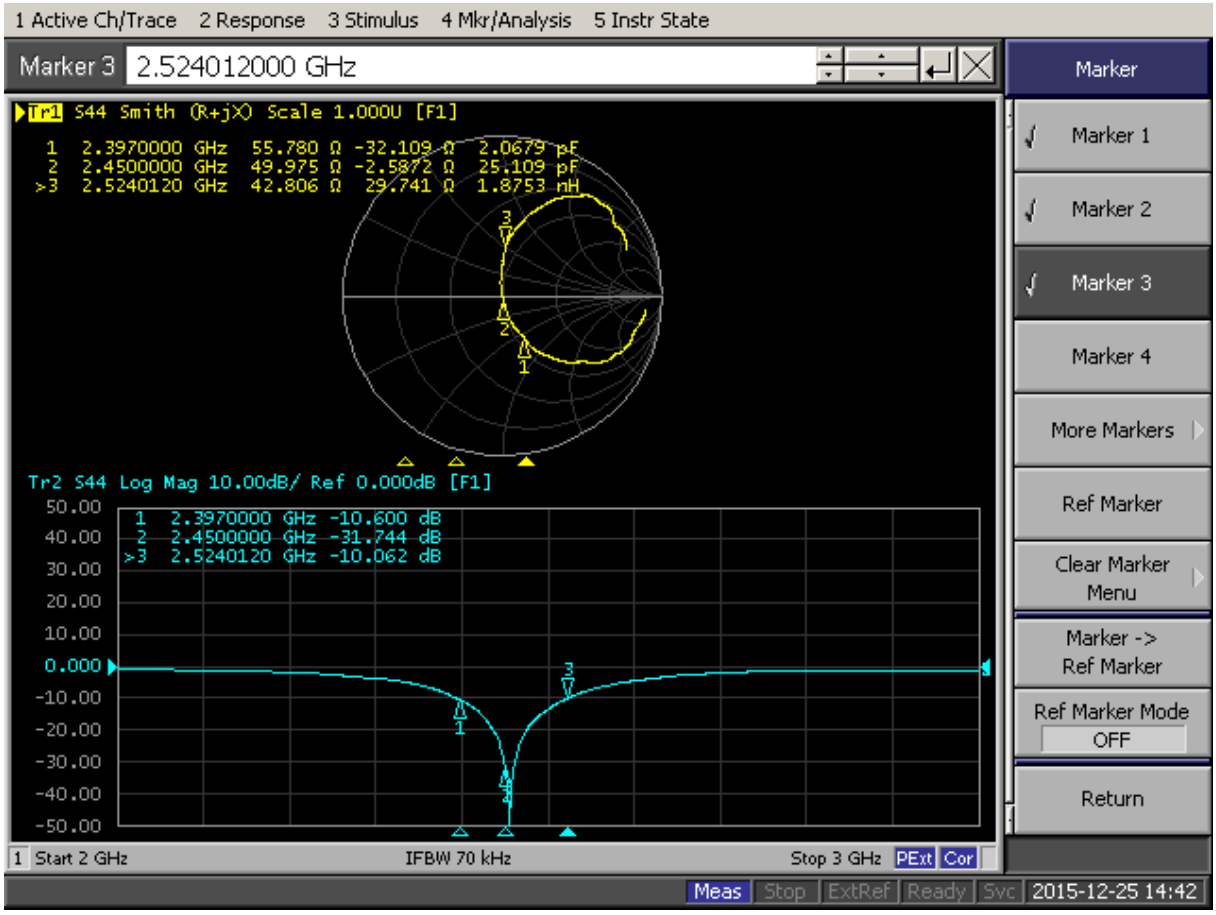

6. 方向图　Radiation Pattern

coordinates：

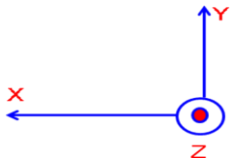

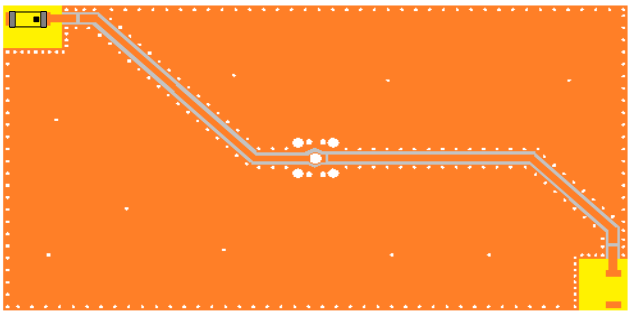

3D Radiation Pattern

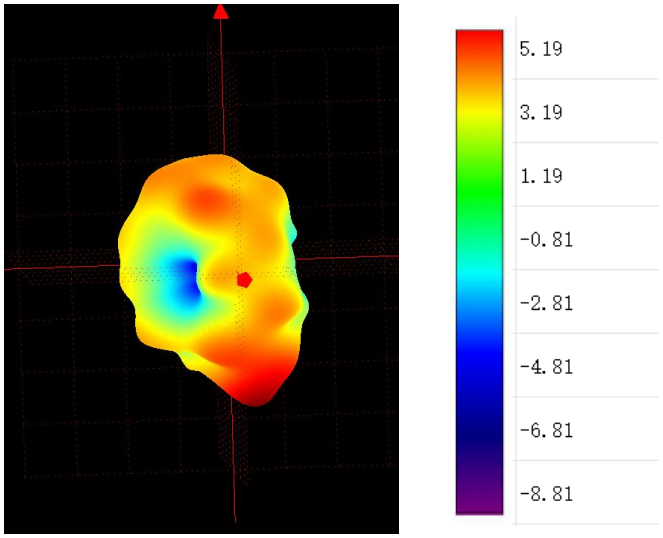

Frequency (MHz)	2400	2450	2500
Avg. Gain (dBi)	-0.23	-0.36	-0.51
Peck Gain (dBi)	4.98	5.19	4.55
Efficiency (%)	70	71.2	69

7. 可靠性试验后允许误差　Post Dependability Tolerance

经可靠性试验后允许比起始读数偏差见下表

Post Dependability Tolerance　(Refer to the table)

No.	Item （项目）	Post Dependability Tolerance (可靠性试验后允许附加误差)
7.1	Central Frequency　中心频率	±5 MHz
7.2	Band Width　通带宽度	±5 MHz
7.3	Gain　增益	±0.1 dBi
7.4	V.S.W.R (in BW) 驻波比	±0.1

8. 可靠性试验　Dependability Test

基准条件：温度范围 Temperature range　25±5℃

相对湿度范围 Relative Humidity range　55~75%RH

工作温度 Operating Temperature range　-40℃~+85℃

8.1 耐振动　Vibration Resist

在振动频率为 10~55Hz 振幅为 1.5mm 沿 X.Y.Z 方向各振动 2 小时后测试符合表 8.1~8.4 规定。

The device should satisfy the electrical characteristics specified in paragraph 8.1~8.4 after applied to the vibration of 10 to 55Hz with amplitude of 1.5mm for 2 hours each in X , Y and Z directions.

8.2 耐跌落冲击　Drop Shock

在 100cm 高度处按 X，Y，Z 三个面分别自由跌落在木制地板上共 3 次后测试符合表 8.1~8.4 规定。

The device should satisfy the electrical characteristics specified in paragraph 8.1~8.4 after dropping onto the hard wooden board from the height of 100cm for 3 times each facet of the 3 dimensions of the device.

8.3 耐焊接热　Solder Heat Proof

能承受经 120~150℃的温度预热 120 秒后，在 255℃+10℃的焊锡浸 5±0.5 秒，或 300℃-10℃的电烙铁焊接 3±0.5 秒，焊接面无损伤。

The device should be satisfied after preheating at 120℃~150℃ for 120 seconds and dipping in soldering Sn at 255℃+10℃ for 5±0.5 seconds，or electric iron 300℃-10℃ for 3±0.5 seconds，without damnify.

8.4 结合力试验　Tensile Strength of Terminal

在产品电极端子上或表面上应能承受 1kg 垂直拉力 10±1 秒。

The device should not be broken after tensile force of 1.0kg is slowly applied to pull a lead pin of the fixed device in the lead axis direction for 10±1 seconds.

8.5 耐弯曲试验　Bending Resist Test

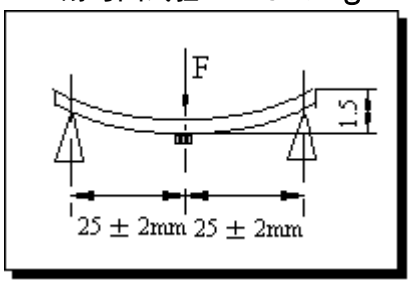

将产品按图焊在 1.6±0.2mm 的 PCB 板中间，由箭头方向施力：1mm/S，弯曲距离：1.5mm，保持 5±1S，产品金属层无脱落。

Weld the product to the center part of the PCB with the thickness 1.6±0.2mm as the illustration shows, and keep exerting force arrow-ward on it at speed of :1mm/S , and hold for 5±1S at the position of 1.5mm bending distance , so far , any peeling off of the product metal coating should not be detected .

8.6 耐湿热特性　Moisture Proof

在温度为 60±2℃，相对湿度 90~95%的恒温湿箱中放置 96 小时，在常温中恢复 1~2 小时后测试，符合表 8.1~8.4 规定。

The device should satisfy the electrical characteristics specified in paragraph 8.1~8.4 after exposed to the temperature 60±2℃and the relative humidity 90~95% RH for 96 hours and 1~2 hours recovery time under normal condition.

8.7 高温特性　High Temperature Endurance

在温度为 85±5℃的恒温箱中放置 96±2 小时，在常温中恢复 1~2 小时后测试。符合表 8.1~8.4 规定。

The device should satisfy the electrical characteristics specified in paragraph 8.1~8.4 after exposed to temperature 85±5℃for 96±2 hours and 1~2 hours recovery time under normal temperature.

8.8 低温特性　Low Temperature Endurance

在温度为-40℃±5℃低温箱中放置 96±2 小时后恢复 1~2 小时测试符合表 8.1~8.4 规定。

The device should also satisfy the electrical characteristics specified in paragraph 8.1~8.4 after exposed to the temperature -40℃±5℃ for 96±2 hours and to 2 hours recovery time under normal temperature.

8.9 温度循环　Temperature Cycle Test

在-40℃温度中保持 30 分钟，再在+85℃温度中保持 30 分钟，共循环 5 次后在常温中恢复 1~2 小时后测试符合表 8.1~8.4 规定。

The device should also satisfy the electrical characteristics specified in paragraph 8.1~8.4 after exposed to the low temperature -40℃ and high temperature +85℃ for 30±2 min each by 5 cycles and 1 to 2 hours recovery time under normal temperature.

9. 回流焊温度　Reflow Soldering Standard Condition

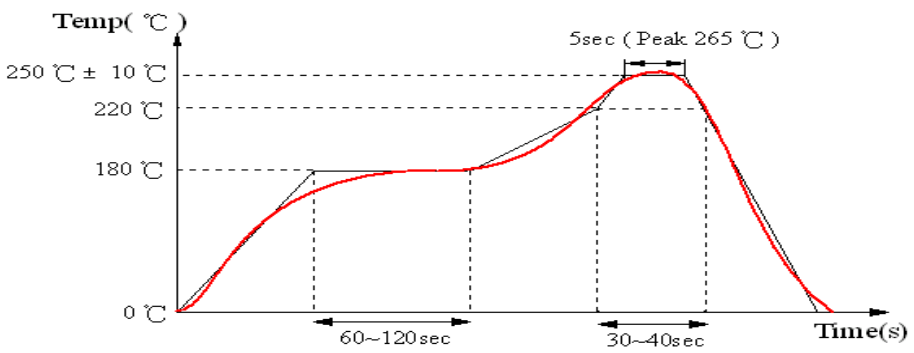

10 包装尺寸(3216)　Packaging and Dimensions

10.1 Plastic Tape

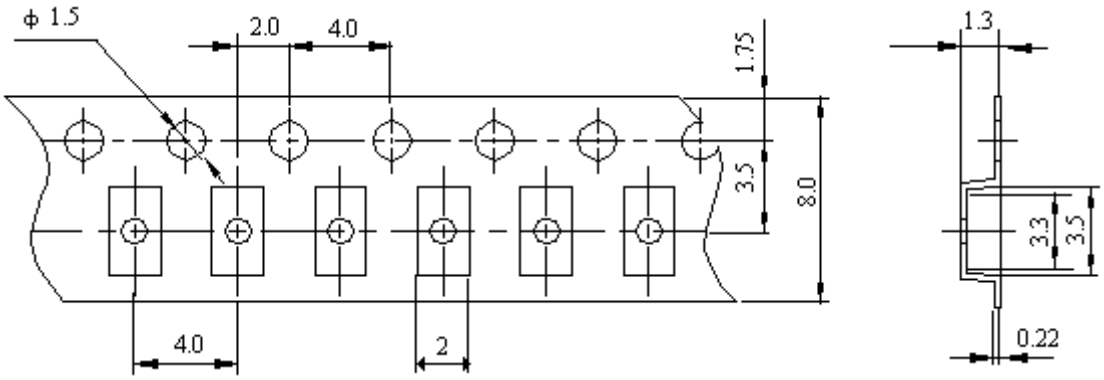

包装说明：　Remarks for Package

载带尾部空穴长度 150～200mm，载带头部空穴长度 250～300mm，头部的盖带加长 250mm。

Reserve a length of 150~200mm for the trailer of the carrier and 250~300 mm for the leader of the carrier and further 250mm of cover tape at the leading part of the carrier.

10.2 Reel（3000 pcs/Reel）

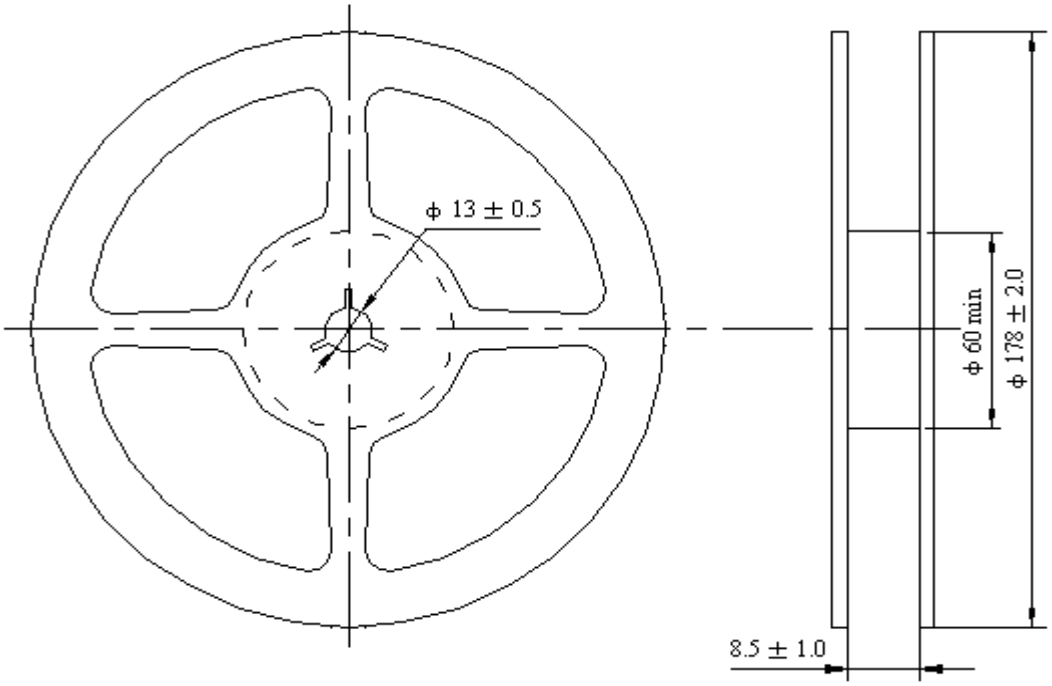

10.3 储存条件　Storage Period

易氧化产品，真空状态储存一年. 产品拆封后请于 168 小时内用完或重新密封包装！

Oxidizable, 12 months in vacuum sealed bag . Material, please repack within 168 hours by re-seal the package treatment after use them!

储存温度与湿度：

Storage Temperature Range : <30 degree C, Humidity : <60%RH