FCC TEST REPORT

For

SHENZHEN FINEMOLD TECHNOLOGIES CO., LTD.

Wireless Meat Thermometer

Test Model: 14.492.19 FM2207 PRO

Additional Model No.: Please Refer to Page 6

Prepared for	:	SHENZHEN FINEMOLD TECHNOLOGIES CO., LTD.
Address	:	Room 301, Building 7, Fuzhong Industrial Park, Huai De Community, Fuyong Street, Bao'an District, Shenzhen
Prepared by	:	Guangzhou LCS Compliance Testing Laboratory Ltd.
Address	:	No.44-1, Qianfeng North Road, Shiqi, Panyu District, Guangzhou, Guangdong, China
Tel	:	(+86) 020-39166689
Fax	:	(+86) 020-39166619
Web	:	www.LCS-cert.com
Mail	:	webmaster@LCS-cert.com
Date of receipt of test sample	:	August 14, 2026
Number of tested samples	:	2
Sample No.	:	C260814006-1, C260814006-2
Serial number	:	Prototype
Date of Test	:	August 14, 2026 ~ September 04, 2026
Date of Report	:	September 07, 2026

FCC TEST REPORT FCC CFR 47 PART 15 C(15.247)		
Report Reference No.	**:**	**LCSC08116011EA**
Date of Issue	:	September 07, 2026
Testing Laboratory Name.....	**:**	**Guangzhou LCS Compliance Testing Laboratory Ltd.**
Address	:	No.44-1, Qianfeng North Road, Shiqi, Panyu District, Guangzhou, Guangdong, China
Testing Location/ Procedure	:	Full application of Harmonised standards ■ Partial application of Harmonised standards □ Other standard testing method □
Applicant's Name	**:**	**SHENZHEN FINEMOLD TECHNOLOGIES CO., LTD.**
Address	:	Room 301, Building 7, Fuzhong Industrial Park, Huai De Community, Fuyong Street, Bao'an District, Shenzhen
Test Specification		
Standard.....	:	FCC CFR 47 PART 15 C(15.247)
TRF Originator.....	:	Guangzhou LCS Compliance Testing Laboratory Ltd.
Master TRF.....	:	Dated 2011-03
Guangzhou LCS Compliance Testing Laboratory Ltd. All rights reserved. This publication may be reproduced in whole or in part for non-commercial purposes as long as the Guangzhou LCS Compliance Testing Laboratory Ltd. is acknowledged as copyright owner and source of the material. Guangzhou LCS Compliance Testing Laboratory Ltd. takes no responsibility for and will not assume liability for damages resulting from the reader's interpretation of the reproduced material due to its placement and context.		
EUT Description.	**:**	**Wireless Meat Thermometer**
Trade Mark	:	N/A
Test Model.....	:	14.492.19 FM2207 PRO
Ratings	:	Please Refer to Page 6
Result	**:**	**PASS**

Compiled by:	**Supervised by:**	**Approved by:**
Lifeng Le/ Administrator	Justin Zhu/ Technique Director	Gavin Liang/ Manager

Guangzhou LCS Compliance Testing Laboratory Ltd.
Add: No.44-1, Qianfeng North Road, Shiqi, Panyu District, Guangzhou, Guangdong, China
Tel: +(86) 020-39166689 | E-mail: webmaster@lcs-cert.com | Web: www.lcs-cert.com
Scan code to check authenticity

FCC -- TEST REPORT

Test Report No. : **LCSC08116011EA**	September 07, 2026 Date of issue

Test Model.....	: 14.492.19 FM2207 PRO
EUT.....	: Wireless Meat Thermometer
Applicant.....	**: SHENZHEN FINEMOLD TECHNOLOGIES CO., LTD.**
Address.....	: Room 301, Building 7, Fuzhong Industrial Park, Huai De Community, Fuyong Street, Bao'an District, Shenzhen
Telephone.....	: /
Fax.....	: /
Manufacturer.....	**: SHENZHEN FINEMOLD TECHNOLOGIES CO., LTD.**
Address.....	: Room 301, Building 7, Fuzhong Industrial Park, Huai De Community, Fuyong Street, Bao'an District, Shenzhen
Telephone.....	: /
Fax.....	: /
Factory	**: SHENZHEN FINEMOLD TECHNOLOGIES CO., LTD.**
Address.....	: Room 301, Building 7, Fuzhong Industrial Park, Huai De Community, Fuyong Street, Bao'an District, Shenzhen
Telephone.....	: /
Fax.....	: /

Test Result	**PASS**

The test report merely corresponds to the test sample.

It is not permitted to copy extracts of these test result without the written permission of the test laboratory.

Guangzhou LCS Compliance Testing Laboratory Ltd.
Add: No.44-1, Qianfeng North Road, Shiqi, Panyu District, Guangzhou, Guangdong, China
Tel: +(86) 020-39166689 | E-mail: webmaster@lcs-cert.com | Web: www.lcs-cert.com
Scan code to check authenticity

Revision History

Report Version	Issue Date	Revision Content	Revised By
000	September 07, 2026	Initial Issue	---

Guangzhou LCS Compliance Testing Laboratory Ltd.
Add: No.44-1, Qianfeng North Road, Shiqi, Panyu District, Guangzhou, Guangdong, China
Tel: +(86) 020-39166689 | E-mail: webmaster@lcs-cert.com | Web: www.lcs-cert.com
Scan code to check authenticity

TABLE OF CONTENTS

1. GENERAL INFORMATION 6
1.1. DESCRIPTION OF DEVICE (EUT) 6
1.2. SUPPORT EQUIPMENT LIST 7
NOTE: AUXILIARY EQUIPMENT IS PROVIDED BY THE LABORATORY 7
1.3. EXTERNAL I/O CABLE 7
1.4. DESCRIPTION OF TEST FACILITY 7
1.5. STATEMENT OF THE MEASUREMENT UNCERTAINTY 7
1.7. DESCRIPTION OF TEST MODES 8
2. TEST METHODOLOGY 9
2.1. EUT CONFIGURATION 9
2.2. EUT EXERCISE 9
2.3. GENERAL TEST PROCEDURES 9
2.4. TEST SAMPLE 9
3. SYSTEM TEST CONFIGURATION 10
3.1. JUSTIFICATION 10
3.2. EUT EXERCISE SOFTWARE 10
3.3. SPECIAL ACCESSORIES 10
3.4. BLOCK DIAGRAM/SCHEMATICS 10
3.5. EQUIPMENT MODIFICATIONS 10
3.6. TEST SETUP 10
4. SUMMARY OF TEST RESULTS 11
5. TEST RESULT 12
5.1. 6 DB SPECTRUM BANDWIDTH MEASUREMENT 12
5.2. MAXIMUM PEAK CONDUCTED OUTPUT POWER MEASUREMENT 13
5.3. POWER SPECTRAL DENSITY MEASUREMENT 14
5.4. RADIATED EMISSIONS MEASUREMENT 15
5.5. BAND EDGE MEASUREMENTS AND CONDUCTED SPURIOUS EMISSIONS TEST 25
5.6. ON TIME AND DUTY CYCLE 26
5.7. AC POWER LINE CONDUCTED EMISSIONS 27
5.8. EMISSIONS IN RESTRICTED BANDS 30
5.9. ANTENNA REQUIREMENTS 32
6. LIST OF MEASURING EQUIPMENTS 33
7. TEST SETUP PHOTOGRAPHS OF EUT 34
8. EXTERIOR PHOTOGRAPHS OF THE EUT 34
9. INTERIOR PHOTOGRAPHS OF THE EUT 34

Guangzhou LCS Compliance Testing Laboratory Ltd.
Add: No.44-1, Qianfeng North Road, Shiqi, Panyu District, Guangzhou, Guangdong, China
Tel: +(86) 020-39166689 | E-mail: webmaster@lcs-cert.com | Web: www.lcs-cert.com
Scan code to check authenticity

1. GENERAL INFORMATION

1.1. Description of Device (EUT)

EUT	:	Wireless Meat Thermometer
Test Model	:	14.492.19 FM2207 PRO
Additional Model No.	:	14.492.20 FM2307 PRO, 14.491.94 FM2207, 14.491.96 FM2307
Model Declaration	:	PCB board, structure and internal of these model(s) are the same, So no additional models were tested.
Ratings	:	Input: 5V⎓1A Battery:3.7V⎓2000mAh
Hardware Version	:	/
Software Version	:	/
Bluetooth	:	
Frequency Range	:	2402MHz~2480MHz
Channel Number	:	40 channels for Bluetooth V5.0 (DTS)
Channel Spacing	:	2MHz for Bluetooth V5.0 (DTS)
Modulation Type	:	GFSK for Bluetooth V5.0 (DTS)
Bluetooth Version	:	V5.0
Antenna Description	:	Internal Antenna, 1.36dBi(Max.)

Note: For a more detailed antenna description, please refer to the antenna specifications or the antenna report provided by the customer.

Guangzhou LCS Compliance Testing Laboratory Ltd.
Add: No.44-1, Qianfeng North Road, Shiqi, Panyu District, Guangzhou, Guangdong, China
Tel: +(86) 020-39166689 | E-mail: webmaster@lcs-cert.com | Web: www.lcs-cert.com
Scan code to check authenticity

1.2. Support equipment List

Manufacturer	Description	Model	Serial Number	Certificate
SHENZHEN TIANYIN ELECTRONICS CO., LTD	Power Adapter	TPA-46050200UU	--	FCC

Note: Auxiliary equipment is provided by the laboratory.

1.3. External I/O Cable

I/O Port Description	Quantity	Cable
Type-C USB Port	1	N/A

1.4. Description of Test Facility

Site Description
EMC Lab. : CNAS Registration Number is L11555
A2LA Certificate Number: 5099.01
FCC Designation Number is CN1379
Test Firm Registration Number: 729882

The 3m-Semi anechoic test site fulfils CISPR 16-1-4 according to ANSI C63.10-2020 and CISPR 16-1-4:2010 SVSWR requirement for radiated emission above 1GHz.

1.5. Statement of the Measurement Uncertainty

The data and results referenced in this document are true and accurate. The reader is cautioned that there may be errors within the calibration limits of the equipment and facilities. The measurement uncertainty was calculated for all measurements listed in this test report acc. To CISPR 16 – 4 “Specification for radio disturbance and immunity measuring apparatus and methods – Part 4: Uncertainty in EMC Measurements” and is documented in the LCS quality system acc. To DIN EN ISO/IEC 17025. Furthermore, component and process variability of devices similar to that tested may result in additional deviation. The manufacturer has the sole responsibility of continued compliance of the device.

Guangzhou LCS Compliance Testing Laboratory Ltd.
Add: No.44-1, Qianfeng North Road, Shiqi, Panyu District, Guangzhou, Guangdong, China
Tel: +(86) 020-39166689 | E-mail: webmaster@lcs-cert.com | Web: www.lcs-cert.com
Scan code to check authenticity

1.6. Measurement Uncertainty

Test Item		Frequency Range	Uncertainty	Note
Radiation Uncertainty	:	9KHz~30MHz	±3.10dB	(1)
		30MHz~200MHz	±2.96dB	(1)
		200MHz~1000MHz	±3.10dB	(1)
		1GHz~26.5GHz	±3.80dB	(1)
		26.5GHz~40GHz	±3.90dB	(1)
Conduction Uncertainty	:	150kHz~30MHz	±1.63dB	(1)
Power disturbance	:	30MHz~300MHz	±1.60dB	(1)
Output power	:	1GHz-40GHz	±0.57dB	(1)
Power Spectral Density	:	1GHz-40GHz	±1.2dB	(1)
Occupied Channel Bandwidth	:	1GHz-40GHz	±5%	(1)
Conducted RF Spurious Emission	:	9kHz-40GHz	±1.80dB	(1)
Emissions in Restricted Bands	:	1GHz-40GHz	±2.47dB	(1)

(1). This uncertainty represents an expanded uncertainty expressed at approximately the 95% confidence level using a coverage factor of k=2.

1.7. Description of Test Modes

The EUT has been tested under operating condition.

This test was performed with EUT in X, Y, Z position and the worst case was found when EUT in Y position.

AC conducted emission pre-test at both at AC 120V/60Hz and AC 240V/60Hz modes, recorded worst case.

AC conducted emission pre-test at power adapter modes, recorded worst case.

Worst-case mode and channel used for 150 KHz-30 MHz power line conducted emissions was determined to be BT LE mode (1Mbps-Middle Channel).

Worst-case mode and channel used for 9 KHz-1000 MHz radiated emissions was determined to be BT LE mode (1Mbps-Middle Channel).

Worst-Case data rates were utilized from preliminary testing of the Chipset, worst-case data rates used during the testing are as follows:
BT LE: 1 Mbps, GFSK.

BT LE

Frequency Band	Channel No.	Frequency(MHz)	Channel No.	Frequency(MHz)
2402~2480MHz	0	2402	20	2442
	1	2404	--	--
	2	2406	--	--
	--	--	37	2476
	--	--	38	2478
	19	2440	39	2480

Guangzhou LCS Compliance Testing Laboratory Ltd.
Add: No.44-1, Qianfeng North Road, Shiqi, Panyu District, Guangzhou, Guangdong, China
Tel: +(86) 020-39166689 | E-mail: webmaster@lcs-cert.com | Web: www.lcs-cert.com
Scan code to check authenticity

2. TEST METHODOLOGY

All measurements contained in this report were conducted with ANSI C63.10-2020, American National Standard of Procedures for Compliance Testing of Unlicensed Wireless Devices.

The radiated testing was performed at an antenna-to-EUT distance of 3 meters. All radiated and conducted emissions measurement was performed at Guangzhou LCS Compliance Testing Laboratory Ltd.

2.1. EUT Configuration

The EUT configuration for testing is installed on RF field strength measurement to meet the Commissions requirement and operating in a manner that intends to maximize its emission characteristics in a continuous normal application.

2.2. EUT Exercise

The EUT was operated in the engineering mode to fix the TX frequency that was for the purpose of the measurements.

According to FCC's request, Test Procedure KDB558074 D01 15.247 Meas Guidance v05r02 is required to be used for this kind of FCC 15.247 digital modulation device.

According to its specifications, the EUT must comply with the requirements of the Section 15.203, 15.205, 15.207, 15.209 and 15.247 under the FCC Rules Part 15 Subpart C.

2.3. General Test Procedures

2.3.1 Conducted Emissions

The EUT is directly placed on the ground. According to the requirements in Section 6.2.1 of ANSI C63.10-2020 Conducted emissions from the EUT measured in the frequency range between 0.15 MHz and 30MHz using Quasi-peak and average detector modes.

2.3.2 Radiated Emissions

The EUT is placed on a turntable, which is directly placed on the ground. The turntable shall rotate 360 degrees to determine the position of maximum emission level. EUT is set 3m away from the receiving antenna, which varied from 1m to 4m to find out the highest emission. And also, each emission was to be maximized by changing the polarization of receiving antenna both horizontal and vertical. In order to find out the maximum emissions, exploratory radiated emission measurements were made according to the requirements in Section 6.3 of ANSI C63.10-2020

2.4. Test Sample

The application provides 2 samples to meet requirement;

Sample Number	Description
Sample 1(C260814006-1)	Engineer sample – continuous transmit
Sample 2(C260814006-2)	Normal sample – Intermittent transmit

Guangzhou LCS Compliance Testing Laboratory Ltd.
Add: No.44-1, Qianfeng North Road, Shiqi, Panyu District, Guangzhou, Guangdong, China
Tel: +(86) 020-39166689 | E-mail: webmaster@lcs-cert.com | Web: www.lcs-cert.com
Scan code to check authenticity

3. SYSTEM TEST CONFIGURATION

3.1. Justification

The system was configured for testing in a continuous transmits condition.

3.2. EUT Exercise Software

The system was configured for testing in a continuous transmits condition and change test channels by software provided by application.

3.3. Special Accessories

N/A.

3.4. Block Diagram/Schematics

Please refer to the related document

3.5. Equipment Modifications

Guangzhou LCS Compliance Testing Laboratory Ltd. has not done any modification on the EUT.

3.6. Test Setup

Please refer to the test setup photo.

Guangzhou LCS Compliance Testing Laboratory Ltd.
Add: No.44-1, Qianfeng North Road, Shiqi, Panyu District, Guangzhou, Guangdong, China
Tel: +(86) 020-39166689 | E-mail: webmaster@lcs-cert.com | Web: www.lcs-cert.com
Scan code to check authenticity

4. SUMMARY OF TEST RESULTS

Applied Standard: FCC Part 15 Subpart C				
FCC Rules	Description of Test	Test Sample	Result	Remark
§15.247(a)(2)	6dB Bandwidth	Sample 1	Compliant	Appendix A.1
§15.247(b)	Maximum peak conducted output power	Sample 1	Compliant	Appendix A.2
§15.247(e)	Power Spectral Density	Sample 1	Compliant	Appendix A.3
§15.247(d)	Band edge measurements and Conducted Spurious Emissions	Sample 1	Compliant	Appendix A.4 Appendix A.5
/	On Time and Duty Cycle	Sample 1	/	Only reported; Appendix A.6
§15.209, §15.247(d)	Radiated Spurious Emissions	Sample 1 Sample 2	Compliant	Note 1
§15.205	Emissions at Restricted Band	Sample 1	Compliant	Appendix A.7
§15.207(a)	Conducted Emissions	Sample 2	Compliant	Note 1
§15.203	Antenna Requirements	Sample 1	Compliant	Note 1
§15.247(i)§1.1310 §15.247(i)§2.1091	RF Exposure	N/A	Compliant	Note 2

Remark:
1. Note 1 – Test results inside test report;
2. Note 2 – Test results in other test report (RF Exposure Evaluation);

Guangzhou LCS Compliance Testing Laboratory Ltd.
Add: No.44-1, Qianfeng North Road, Shiqi, Panyu District, Guangzhou, Guangdong, China
Tel: +(86) 020-39166689 | E-mail: webmaster@lcs-cert.com | Web: www.lcs-cert.com
Scan code to check authenticity

5. TEST RESULT

5.1. 6 dB Spectrum Bandwidth Measurement

5.1.1. Standard Applicable

According to §15.247(a) (2): For digital modulation systems, the minimum 6 dB bandwidth shall be at least 500 kHz.

5.1.2. Measuring Instruments and Setting

Please refer to equipment list in this report. The following table is the setting of the Spectrum Analyzer.

Spectrum Parameter	Setting
Attenuation	Auto
RBW	100KHz
VBW	≥3*RBW
Span Frequency	> RBW
Detector	Peak
Trace	Max Hold
Sweep Time	Auto

5.1.3. Test Procedures

1. The transmitter output (antenna port) was connected to the spectrum analyzer in peak hold mode.

2. Set RBW/VBW = 100 KHz/ 300KHz (for 6dB bandwidth measurement)

Set RBW = 1%~5% OBW; VBW≥3*RBW (for occupied bandwidth measurement).

3. Measured the 6dB bandwidth and 99% occupied bandwidth by related function of the spectrum analyzer.

5.1.4. Test Setup Layout

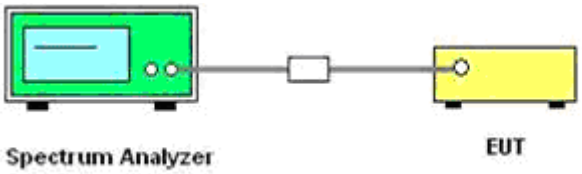

5.1.5. EUT Operation during Test

The EUT was programmed to be in continuously transmitting mode.

5.1.6. Test Result of 6dB Spectrum Bandwidth

PASS

Please refer to Appendix A.1

Remark: Test results including cable loss.

Guangzhou LCS Compliance Testing Laboratory Ltd.
Add: No.44-1, Qianfeng North Road, Shiqi, Panyu District, Guangzhou, Guangdong, China
Tel: +(86) 020-39166689 | E-mail: webmaster@lcs-cert.com | Web: www.lcs-cert.com
Scan code to check authenticity

5.2. Maximum Peak Conducted Output Power Measurement

5.2.1. Standard Applicable

For systems using digital modulation in the 902-928 MHz, 2400-2483.5 MHz, and 5725-5850 MHz bands: 1 Watt. As an alternative to a peak power measurement, compliance with the one Watt limit can be based on a measurement of the maximum conducted output power. Maximum Conducted Output Power is defined as the total transmit power delivered to all antennas and antenna elements averaged across all symbols in the signaling alphabet when the transmitter is operating at its maximum power control level. Power must be summed across all antennas and antenna elements. The average must not include any time intervals during which the transmitter is off or is transmitting at a reduced power level. If multiple modes of operation are possible (e.g., alternative modulation methods), the maximum conducted output power is the highest total transmit power occurring in any mode.

5.2.2. Test Procedures

The transmitter output (antenna port) was connected to the spectrum analyzer.
According to KDB558074 D01 15.247 Meas Guidance v05r02 Section 9.1 Maximum peak conducted output power 9.1.1.
This procedure shall be used when the measurement instrument has available a resolution bandwidth that is greater than the DTS bandwidth.
a) Set the RBW ≥ DTS bandwidth.
b) Set VBW ≥ 3 × RBW.
c) Set span ≥ 3 x RBW
d) Sweep time = auto couple.
e) Detector = peak.
f) Trace mode = max hold.
g) Allow trace to fully stabilize.
h) Use peak marker function to determine the peak amplitude level.

5.2.3. Test Setup Layout

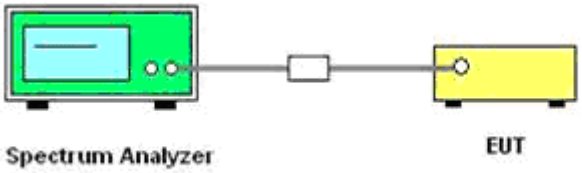

5.2.4. EUT Operation during Test

The EUT was programmed to be in continuously transmitting mode.

5.2.5. Test Result of Maximum Conducted Output Power

PASS

Please refer to Appendix A.2

Remark:
1)Test results including cable loss.
2) Average power only for report.

Guangzhou LCS Compliance Testing Laboratory Ltd.
Add: No.44-1, Qianfeng North Road, Shiqi, Panyu District, Guangzhou, Guangdong, China
Tel: +(86) 020-39166689 | E-mail: webmaster@lcs-cert.com | Web: www.lcs-cert.com
Scan code to check authenticity

5.3. Power Spectral Density Measurement

5.3.1. Standard Applicable

According to §15.247(e): For digitally modulated systems, the power spectral density conducted from the intentional radiator to the antenna shall not be greater than 8 dBm in any 3 kHz band during any time interval of continuous transmission.

5.3.2. Measuring Instruments and Setting

Please refer to equipment list in this report. The following table is the setting of Spectrum Analyzer.

5.3.3. Test Procedures

1. Use this procedure when the maximum peak conducted output power in the fundamental emission is used to demonstrate compliance.
2. The power was monitored at the coupler port with a Spectrum Analyzer. The power level was set to the maximum level.
3. Set the RBW = 3 kHz.
4. Set the VBW ≥ 3*RBW
5. Set the span to 1.5 times the DTS channel bandwidth.
6. Detector = peak.
7. Sweep time = auto couple.
8. Trace mode = max hold.
9. Allow trace to fully stabilize.
10. Use the peak marker function to determine the maximum power level.
11. If measured value exceeds limit, reduce RBW (no less than 3 kHz) and repeat.
12. The resulting peak PSD level shall not be greater than 8 dBm in any 3KHz band.

5.3.4. Test Setup Layout

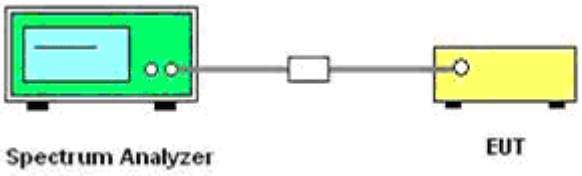

5.3.5. EUT Operation during Test

The EUT was programmed to be in continuously transmitting mode.

5.3.6. Test Result of Power Spectral Density

PASS

Please refer to Appendix A.3

Remark: Test results including cable loss.

Guangzhou LCS Compliance Testing Laboratory Ltd.
Add: No.44-1, Qianfeng North Road, Shiqi, Panyu District, Guangzhou, Guangdong, China
Tel: +(86) 020-39166689 | E-mail: webmaster@lcs-cert.com | Web: www.lcs-cert.com
Scan code to check authenticity

5.4. Radiated Emissions Measurement

5.4.1. Standard Applicable

15.205 (a) Except as shown in paragraph (d) of this section, only spurious emissions are permitted in any of the frequency bands listed below:

MHz	MHz	MHz	GHz
0.090-0.110	16.42-16.423	399.9-410	4.5-5.15
\1\ 0.495-0.505	16.69475-16.69525	608-614	5.35-5.46
2.1735-2.1905	16.80425-16.80475	960-1240	7.25-7.75
4.125-4.128	25.5-25.67	1300-1427	8.025-8.5
4.17725-4.17775	37.5-38.25	1435-1626.5	9.0-9.2
4.20725-4.20775	73-74.6	1645.5-1646.5	9.3-9.5
6.215-6.218	74.8-75.2	1660-1710	10.6-12.7
6.26775-6.26825	108-121.94	1718.8-1722.2	13.25-13.4
6.31175-6.31225	123-138	2200-2300	14.47-14.5
8.291-8.294	149.9-150.05	2310-2390	15.35-16.2
8.362-8.366	156.52475-156.52525	2483.5-2500	17.7-21.4
8.37625-8.38675	156.7-156.9	2690-2900	22.01-23.12
8.41425-8.41475	162.0125-167.17	3260-3267	23.6-24.0
12.29-12.293.	167.72-173.2	3332-3339	31.2-31.8
12.51975-12.52025	240-285	3345.8-3358	36.43-36.5
12.57675-12.57725	322-335.4	3600-4400	(\2\)
13.36-13.41			

\1\ Until February 1, 1999, this restricted band shall be 0.490-0.510 MHz.

\2\ Above 38.6

According to §15.247 (d): 20dBc in any 100 kHz bandwidth outside the operating frequency band. In case the emission fall within the restricted band specified on 15.205(a), then the 15.209(a) limit in the table below has to be followed.

Frequencies (MHz)	Field Strength (microvolts/meter)	Measurement Distance (meters)
0.009~0.490	2400/F(KHz)	300
0.490~1.705	24000/F(KHz)	30
1.705~30.0	30	30
30~88	100	3
88~216	150	3
216~960	200	3
Above 960	500	3

5.4.2. Measuring Instruments and Setting

Please refer to equipment list in this report. The following table is the setting of spectrum analyzer and receiver.

Spectrum Parameter	Setting
Attenuation	Auto
Start Frequency	1000 MHz
Stop Frequency	10th carrier harmonic
RB / VB (Emission in restricted band)	1MHz / 1MHz for Peak, 1 MHz / 1/B kHz for Average
RB / VB (Emission in non-restricted band)	1MHz / 1MHz for Peak, 1 MHz / 1/B kHz for Average

Guangzhou LCS Compliance Testing Laboratory Ltd.
Add: No.44-1, Qianfeng North Road, Shiqi, Panyu District, Guangzhou, Guangdong, China
Tel: +(86) 020-39166689 | E-mail: webmaster@lcs-cert.com | Web: www.lcs-cert.com
Scan code to check authenticity

Receiver Parameter	Setting
Attenuation	Auto
Start ~ Stop Frequency	9kHz~150kHz / RB/VB 200Hz/1KHz for QP/AVG
Start ~ Stop Frequency	150kHz~30MHz / RB/VB 9kHz/30KHz for QP/AVG
Start ~ Stop Frequency	30MHz~1000MHz / RB/VB 120kHz/1MHz for QP

5.4.3. Test Procedures

1) Sequence of testing 9 kHz to 30 MHz

Setup:

--- The equipment was set up to simulate a typical usage like described in the user manual or described by manufacturer.

--- If the EUT is a tabletop system, a rotatable table with 0.8 m height is used.

--- If the EUT is a floor standing device, it is placed on the ground.

--- Auxiliary equipment and cables were positioned to simulate normal operation conditions.

--- The AC power port of the EUT (if available) is connected to a power outlet below the turntable.

--- The measurement distance is 3 meter.

--- The EUT was set into operation.

Premeasurement:

--- The turntable rotates from 0° to 315° using 45° steps.

--- The antenna height is 1.0 meter.

--- At each turntable position the analyzer sweeps with peak detection to find the maximum of all emissions

Final measurement:

--- Identified emissions during the premeasurement the software maximizes by rotating the turntable position (0° to 360°) and by rotating the elevation axes (0° to 360°).

--- The final measurement will be done in the position (turntable and elevation) causing the highest emissions with QPK detector.

--- The final levels, frequency, measuring time, bandwidth, turntable position, correction factor, margin to the limit and limit will be recorded. Also a plot with the graph of the premeasurement and the limit will be stored.

Guangzhou LCS Compliance Testing Laboratory Ltd.
Add: No.44-1, Qianfeng North Road, Shiqi, Panyu District, Guangzhou, Guangdong, China
Tel: +(86) 020-39166689 | E-mail: webmaster@lcs-cert.com | Web: www.lcs-cert.com
Scan code to check authenticity

2) Sequence of testing 30 MHz to 1 GHz

Setup:

--- The equipment was set up to simulate a typical usage like described in the user manual or described by manufacturer.

--- If the EUT is a tabletop system, a table with 0.8 m height is used, which is placed on the ground plane.

--- If the EUT is a floor standing device, it is placed on the ground plane with insulation between both.

--- Auxiliary equipment and cables were positioned to simulate normal operation conditions

--- The AC power port of the EUT (if available) is connected to a power outlet below the turntable.

--- The measurement distance is 3 meter.

--- The EUT was set into operation.

Premeasurement:

--- The turntable rotates from 0° to 315° using 45° steps.

--- The antenna is polarized vertical and horizontal.

--- The antenna height changes from 1 to 3 meter.

--- At each turntable position, antenna polarization and height the analyzer sweeps three times in peak to find the maximum of all emissions.

Final measurement:

--- The final measurement will be performed with minimum the six highest peaks.

--- According to the maximum antenna and turntable positions of premeasurement the software maximize the peaks by changing turntable position (± 45°) and antenna movement between 1 and 4 meter.

--- The final measurement will be done with QP detector with an EMI receiver.

--- The final levels, frequency, measuring time, bandwidth, antenna height, antenna polarization, turntable angle, correction factor, margin to the limit and limit will be recorded. Also a plot with the graph of the premeasurement with marked maximum final measurements and the limit will be stored.

Guangzhou LCS Compliance Testing Laboratory Ltd.
Add: No.44-1, Qianfeng North Road, Shiqi, Panyu District, Guangzhou, Guangdong, China
Tel: +(86) 020-39166689 | E-mail: webmaster@lcs-cert.com | Web: www.lcs-cert.com
Scan code to check authenticity

3) Sequence of testing 1 GHz to 18 GHz

Setup:

--- The equipment was set up to simulate a typical usage like described in the user manual or described by manufacturer.

--- If the EUT is a tabletop system, a rotatable table with 1.5 m height is used.

--- If the EUT is a floor standing device, it is placed on the ground plane with insulation between both.

--- Auxiliary equipment and cables were positioned to simulate normal operation conditions

--- The AC power port of the EUT (if available) is connected to a power outlet below the turntable.

--- The measurement distance is 3 meter.

--- The EUT was set into operation.

Premeasurement:

--- The turntable rotates from 0° to 315° using 45° steps.

--- The antenna is polarized vertical and horizontal.

--- The antenna height scan range is 1 meter to 2.5 meter.

--- At each turntable position and antenna polarization the analyzer sweeps with peak detection to find the maximum of all emissions.

Final measurement:

--- The final measurement will be performed with minimum the six highest peaks.

--- According to the maximum antenna and turntable positions of premeasurement the software maximize the peaks by changing turntable position (± 45°) and antenna movement between 1 and 4 meter. This procedure is repeated for both antenna polarizations.

--- The final measurement will be done in the position (turntable, EUT-table and antenna polarization) causing the highest emissions with Peak and Average detector.

--- The final levels, frequency, measuring time, bandwidth, turntable position, EUT-table position, antenna polarization, correction factor, margin to the limit and limit will be recorded. Also a plot with the graph of the premeasurement with marked maximum final measurements and the limit will be stored.

Guangzhou LCS Compliance Testing Laboratory Ltd.
Add: No.44-1, Qianfeng North Road, Shiqi, Panyu District, Guangzhou, Guangdong, China
Tel: +(86) 020-39166689 | E-mail: webmaster@lcs-cert.com | Web: www.lcs-cert.com
Scan code to check authenticity

4) Sequence of testing above 18 GHz

Setup:

--- The equipment was set up to simulate a typical usage like described in the user manual or described by manufacturer.

--- If the EUT is a tabletop system, a rotatable table with 1.5 m height is used.

--- If the EUT is a floor standing device, it is placed on the ground plane with insulation between both.

--- Auxiliary equipment and cables were positioned to simulate normal operation conditions

--- The AC power port of the EUT (if available) is connected to a power outlet below the turntable.

--- The measurement distance is 1 meter.

--- The EUT was set into operation.

Premeasurement:

--- The antenna is moved spherical over the EUT in different polarizations of the antenna.

Final measurement:

--- The final measurement will be performed at the position and antenna orientation for all detected emissions that were found during the premeasurements with Peak and Average detector.

--- The final levels, frequency, measuring time, bandwidth, correction factor, margin to the limit and limit will be recorded. Also a plot with the graph of the premeasurement and the limit will be stored.

Guangzhou LCS Compliance Testing Laboratory Ltd.
Add: No.44-1, Qianfeng North Road, Shiqi, Panyu District, Guangzhou, Guangdong, China
Tel: +(86) 020-39166689 | E-mail: webmaster@lcs-cert.com | Web: www.lcs-cert.com
Scan code to check authenticity

5.4.4. Test Setup Layout

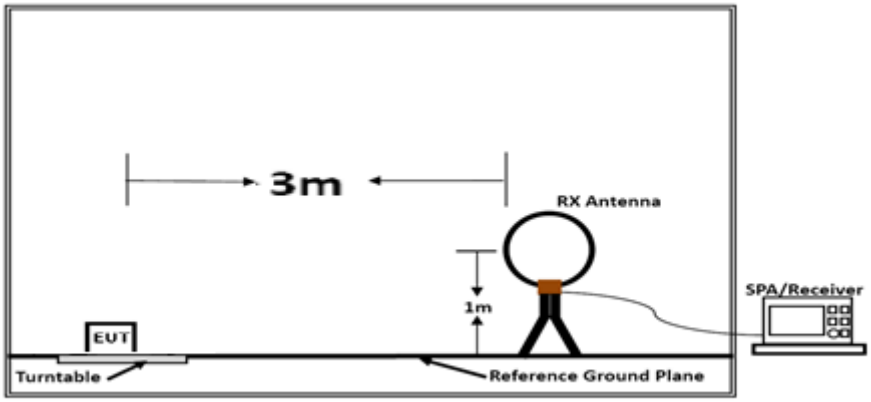

Below 30MHz

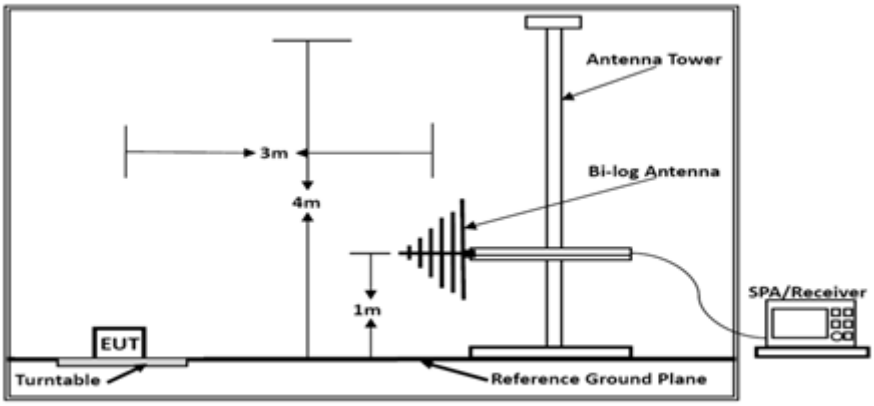

Below 1GHz

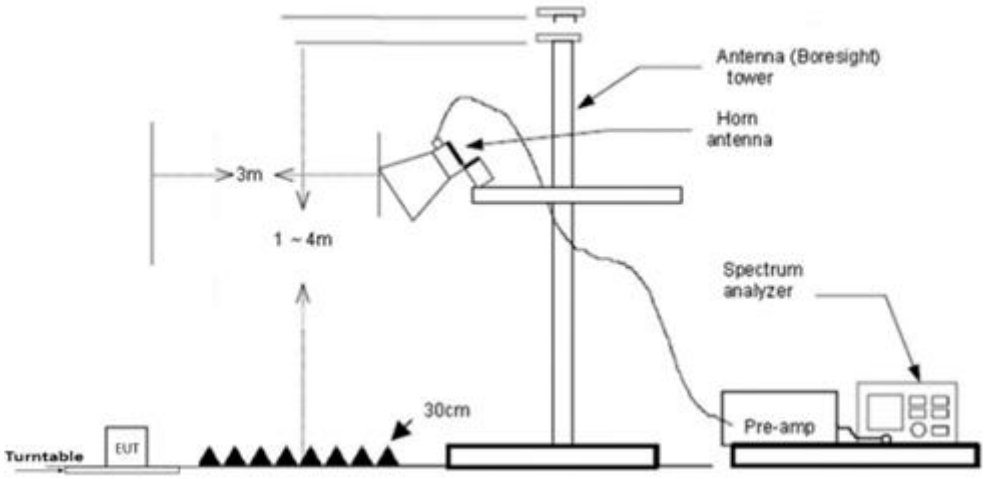

Above 18 GHz shall be extrapolated to the specified distance using an extrapolation factor of 20 dB/decade form 3m to 1m.

Guangzhou LCS Compliance Testing Laboratory Ltd.
Add: No.44-1, Qianfeng North Road, Shiqi, Panyu District, Guangzhou, Guangdong, China
Tel: +(86) 020-39166689 | E-mail: webmaster@lcs-cert.com | Web: www.lcs-cert.com
Scan code to check authenticity

5.4.5. EUT Operation during Test

The EUT was programmed to be in continuously transmitting mode.

5.4.6. Field Strength Calculation

The field strength is calculated by adding the Antenna Factor and Cable Factor and subtracting the Amplifier Gain and Duty Cycle Correction Factor (if any) from the measured reading. The basic equation with a sample calculation is as follows:

FS (dBuV/m) = RA (dBuV) + AF (dB/m) + CL (dB) – AG (dB)

Where FS = Field Strength	CL = Cable Attenuation Factor (Cable Loss)
RA = Reading Amplitude	AG = Amplifier Gain
AF = Antenna Factor	

5.4.7. Results of Radiated Emissions (9 KHz~30MHz)

Temperature	23.9℃	Humidity	50.8%
Test Engineer	Zhang hai	Configurations	BT LE, 1 Mbps

Freq. (MHz)	Level (dBuV)	Over Limit (dB)	Over Limit (dBuV)	Remark
-	-	-	-	See Note

Note:

The amplitude of spurious emissions which are attenuated by more than 20 dB below the permissible value has no need to be reported.

Distance extrapolation factor = 40 log (specific distance / test distance) (dB);
Limit line = specific limits (dBuV) + distance extrapolation factor.

5.4.8. Results of Radiated Emissions (30MHz~1GHz)

Temperature	23.9℃	Humidity	50.8%
Test Engineer	Zhang hai	Configurations	BT LE, 1 Mbps

PASS.

The test data please refer to following page.

Guangzhou LCS Compliance Testing Laboratory Ltd.
Add: No.44-1, Qianfeng North Road, Shiqi, Panyu District, Guangzhou, Guangdong, China
Tel: +(86) 020-39166689 | E-mail: webmaster@lcs-cert.com | Web: www.lcs-cert.com
Scan code to check authenticity

Horizontal

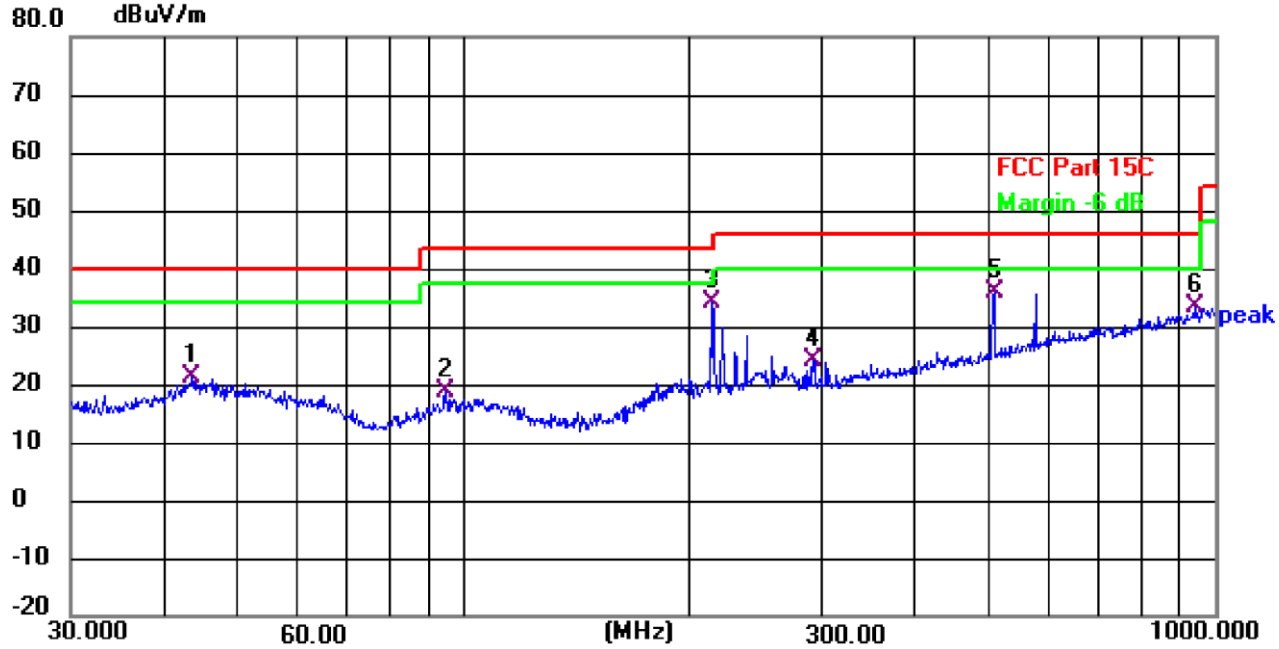

No.	Mk.	Freq.	Reading Level	Correct Factor	Measure-ment	Limit	Over		
		MHz	dBuA	dB	dBuV/m	dBuV/m	dB	Detector	Comment
1		43.5057	0.82	20.45	21.27	40.00	-18.73	QP	
2		94.7600	0.91	18.00	18.91	43.50	-24.59	QP	
3	*	214.5142	15.31	18.70	34.01	43.50	-9.49	QP	
4		292.0583	2.91	21.16	24.07	46.00	-21.93	QP	
5		508.2582	10.14	25.59	35.73	46.00	-10.27	QP	
6		938.8326	1.39	31.83	33.22	46.00	-12.78	QP	

Guangzhou LCS Compliance Testing Laboratory Ltd.
Add: No.44-1, Qianfeng North Road, Shiqi, Panyu District, Guangzhou, Guangdong, China
Tel: +(86) 020-39166689 | E-mail: webmaster@lcs-cert.com | Web: www.lcs-cert.com
Scan code to check authenticity

Vertical

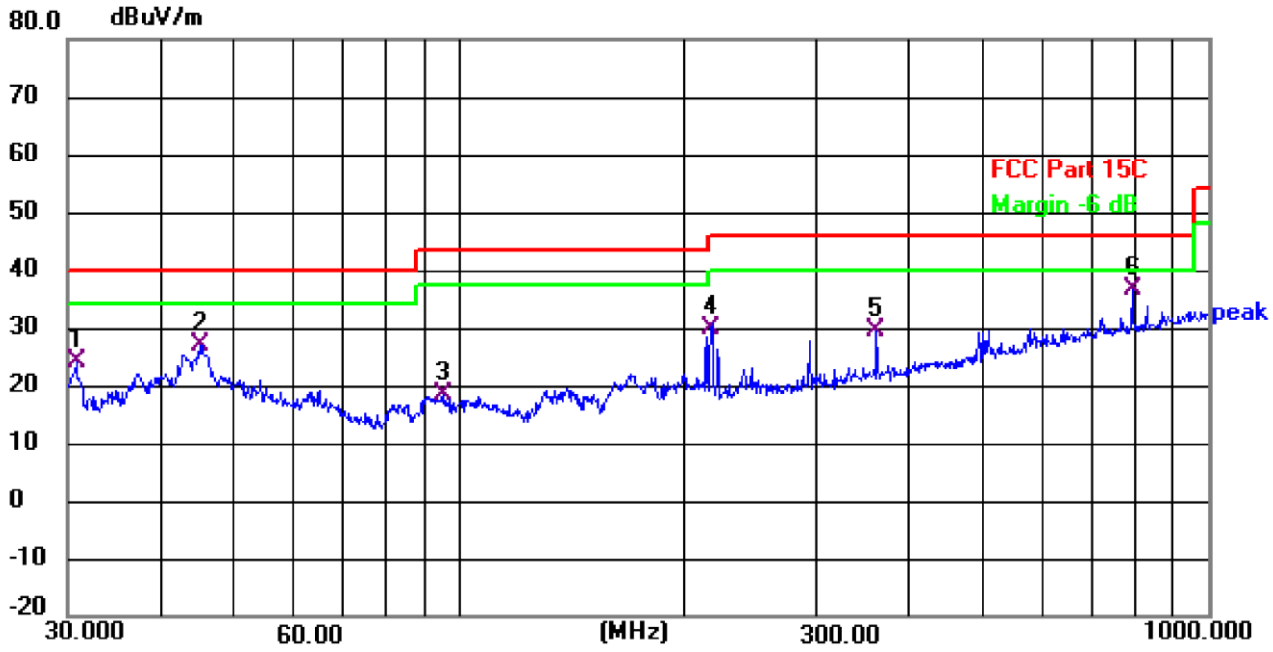

No.	Mk.	Freq.	Reading Level	Correct Factor	Measure-ment	Limit	Over		
		MHz	dBuA	dB	dBuV/m	dBuV/m	dB	Detector	Comment
1		30.8534	6.78	17.36	24.14	40.00	-15.86	QP	
2		45.0583	6.52	20.47	26.99	40.00	-13.01	QP	
3		95.0930	0.39	17.99	18.38	43.50	-25.12	QP	
4		216.7828	11.04	18.79	29.83	46.00	-16.17	QP	
5		360.4476	6.44	22.98	29.42	46.00	-16.58	QP	
6	*	793.3960	6.51	30.10	36.61	46.00	-9.39	QP	

Note:

1). Pre-scan all modes and recorded the worst case results in this report BT LE mode (1Mbps-Middle Channel).

2). Emission level (dBuV/m) = 20 log Emission level (uV/m).

3). Level = Reading + Factor, Margin = Level – Limit, Factor = Antenna Factor + Cable Loss - Preamp Factor

Guangzhou LCS Compliance Testing Laboratory Ltd.
Add: No.44-1, Qianfeng North Road, Shiqi, Panyu District, Guangzhou, Guangdong, China
Tel: +(86) 020-39166689 | E-mail: webmaster@lcs-cert.com | Web: www.lcs-cert.com
Scan code to check authenticity

5.4.9. Results for Radiated Emissions (1 GHz~26.5GHz)

Note: All the modes have been tested and recorded worst mode in the report.

BT LE, 1 Mbps

Channel 0 / 2402 MHz

Freq. MHz	Reading dBuv	Ant. Fac. dB/m	Pre. Fac. dB	Cab. Loss dB	Measured dBuv/m	Limit dBuv/m	Margin dB	Remark	Pol.
4804.00	58.45	34.07	36.05	4.95	61.42	74.00	-12.58	Peak	Horizontal
4804.00	45.63	34.07	36.05	4.95	48.60	54.00	-5.40	Average	Horizontal
4804.00	58.88	34.07	36.05	4.95	61.85	74.00	-12.15	Peak	Vertical
4804.00	44.75	34.07	36.05	4.95	47.72	54.00	-6.28	Average	Vertical

Channel 19 / 2440 MHz

Freq. MHz	Reading dBuv	Ant. Fac. dB/m	Pre. Fac. dB	Cab. Loss dB	Measured dBuv/m	Limit dBuv/m	Margin dB	Remark	Pol.
4880.00	55.97	34.17	36.16	4.97	58.95	74.00	-15.05	Peak	Horizontal
4880.00	40.53	34.17	36.16	4.97	43.51	54.00	-10.49	Average	Horizontal
4880.00	54.67	34.17	36.16	4.97	57.65	74.00	-16.35	Peak	Vertical
4880.00	43.39	34.17	36.16	4.97	46.37	54.00	-7.63	Average	Vertical

Channel 39 / 2480 MHz

Freq. MHz	Reading dBuv	Ant. Fac. dB/m	Pre. Fac. dB	Cab. Loss dB	Measured dBuv/m	Limit dBuv/m	Margin dB	Remark	Pol.
4960.00	54.05	34.27	36.15	4.99	57.16	74.00	-16.84	Peak	Horizontal
4960.00	45.69	34.27	36.15	4.99	48.80	54.00	-5.20	Average	Horizontal
4960.00	54.91	34.27	36.15	4.99	58.02	74.00	-15.98	Peak	Vertical
4960.00	42.99	34.27	36.15	4.99	46.10	54.00	-7.90	Average	Vertical

Notes:
1). Pre-scan all modes and recorded the worst case results in this report BT LE mode (1Mbps-Middle Channel).
2). Measuring frequencies from 9 KHz~10th harmonic or 26.5GHz (which is less), at least have 20dB margin found between lowest internal used/generated frequency to 30MHz.
3). Radiated emissions measured in frequency range from 9 KHz~10th harmonic or 26.5GHz (which is less) were made with an instrument using Peak detector mode.
4). Data of measurement within this frequency range shown " --- " in the table above means the reading of emissions are attenuated more than 20dB below the permissible limits or the field strength is too small to be measured.
5). Measured Level = Reading Level + Factor, Margin = Measured Level – Limit,
Factor = Antenna Factor + Cable Loss - Preamp Factor

6).Due to the measure PK emission level less than the AV limit value,the average doesn't need to be tested.

Guangzhou LCS Compliance Testing Laboratory Ltd.
Add: No.44-1, Qianfeng North Road, Shiqi, Panyu District, Guangzhou, Guangdong, China
Tel: +(86) 020-39166689 | E-mail: webmaster@lcs-cert.com | Web: www.lcs-cert.com
Scan code to check authenticity

5.5. Band edge Measurements and Conducted Spurious Emissions Test

5.5.1. Standard Applicable

According to §15.247 (d): In any 100 kHz bandwidth outside the frequency band in which the spread spectrum or digitally modulated intentional radiator is operating, the radio frequency power that is produced by the intentional radiator shall be at least 20 dB below that in the 100 kHz bandwidth within the band that contains the highest level of the desired power, based on either an RF conducted or a radiated measurement. Attenuation below the general limits specified in Section 15.209(a) is not required. In addition, radiated emissions which fall in the restricted bands, as defined in Section 15.205(a), must also comply with the radiated emission limits specified in Section 15.209(a) (see Section 15.205(c)).

5.5.2. Measuring Instruments and Setting

Please refer to section 6 of equipment list in this report. The following table is the setting of the spectrum analyzer.

Spectrum Parameter	Setting
Detector	Peak
Attenuation	Auto
RB / VB (Emission in restricted band)	100KHz/300KHz
RB / VB (Emission in non-restricted band)	100KHz/300KHz

5.5.3. Test Procedures

The transmitter output is connected to a spectrum analyzer. The resolution bandwidth is set to 100 kHz. The video bandwidth is set to 300 kHz

The spectrum from 30 MHz to 26.5GHz is investigated with the transmitter set to the lowest, middle, and highest channels.

5.5.4. Test Setup Layout

This test setup layout is the same as that shown in section 5.1.4.

5.5.5. EUT Operation during Test

The EUT was programmed to be in continuously transmitting mode.

5.5.6. Test Results of Conducted Spurious Emissions

PASS

Please refer to Appendix A.4 for band edge measurements;

Please refer to Appendix A.5 for conducted spurious emission.

Remark:
1). Test results including cable loss;
2). “---“means that the fundamental frequency not for 15.209 limits requirement.
3). Not recorded emission from 9 KHz to 30 MHz as emission level at least 20dBc lower than emission limit.

Guangzhou LCS Compliance Testing Laboratory Ltd.
Add: No.44-1, Qianfeng North Road, Shiqi, Panyu District, Guangzhou, Guangdong, China
Tel: +(86) 020-39166689 | E-mail: webmaster@lcs-cert.com | Web: www.lcs-cert.com
Scan code to check authenticity

5.6. On Time and Duty Cycle

5.6.1. Standard Applicable

None: for reporting purpose only.

5.6.2. Measuring Instruments and Setting

Please refer to equipment list in this report. The following table is the setting of the spectrum analyzer.

5.6.3. Test Procedures

1. Set the center frequency of the spectrum analyzer to the transmitting frequency;
2. Set the span=0MHz, RBW=2.0MHz, VBW=2.0MHz, Sweep time=Auto
3. Detector = peak;
4. Trace mode = Single hold.

5.6.4. Test Setup Layout

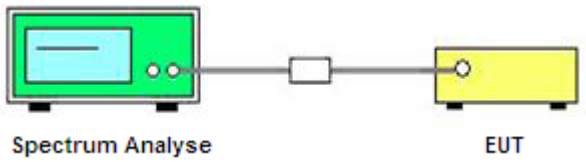

5.6.5. EUT Operation during Test

The EUT was programmed to be in continuously transmitting mode.

5.6.6. Test result

PASS

For reporting purpose only.

Please refer to Appendix A.6

Guangzhou LCS Compliance Testing Laboratory Ltd.
Add: No.44-1, Qianfeng North Road, Shiqi, Panyu District, Guangzhou, Guangdong, China
Tel: +(86) 020-39166689 | E-mail: webmaster@lcs-cert.com | Web: www.lcs-cert.com
Scan code to check authenticity

5.7. AC Power line conducted emissions

5.7.1 Standard Applicable

According to §15.207 (a): For an intentional radiator which is designed to be connected to the public utility (AC) power line, the radio frequency voltage that is conducted back onto the AC power line on any frequency or frequencies within the band 150 kHz to 30 MHz shall not exceed 250 microvolts (The limit decreases linearly with the logarithm of the frequency in the range 0.15 MHz to 0.50 MHz). The limits at specific frequency range are listed as follows:

Frequency Range (MHz)	Limits (dBμV)	
	Quasi-peak	Average
0.15 to 0.50	66 to 56	56 to 46
0.50 to 5	56	46
5 to 30	60	50

* Decreasing linearly with the logarithm of the frequency

5.7.2 Block Diagram of Test Setup

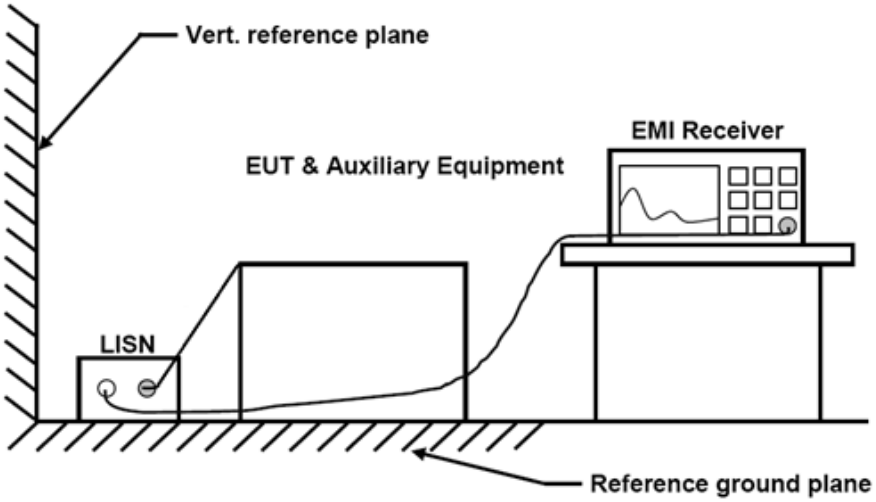

5.7.3 Disturbance Calculation

The AC mains conducted disturbance is calculated by adding the 10dB Pulse Limiter and Cable Factor and Duty Cycle Correction Factor (if any) from the measured reading. The basic equation with a sample calculation is as follows:

CD (dBuV) = RA (dBuV) + PL (dB) + CL (dB)

Where CD = Conducted Disturbance	CL = Cable Attenuation Factor (Cable Loss)
RA = Reading Amplitude	PL = 10 dB Pulse Limiter Factor

5.7.4 Test Results

Temperature	24.2℃	Humidity	55.1%
Test Engineer	Zhang hai	Configurations	BT LE, 1 Mbps

PASS.

The test data please refer to following page.

Guangzhou LCS Compliance Testing Laboratory Ltd.
Add: No.44-1, Qianfeng North Road, Shiqi, Panyu District, Guangzhou, Guangdong, China
Tel: +(86) 020-39166689 | E-mail: webmaster@lcs-cert.com | Web: www.lcs-cert.com
Scan code to check authenticity

Line

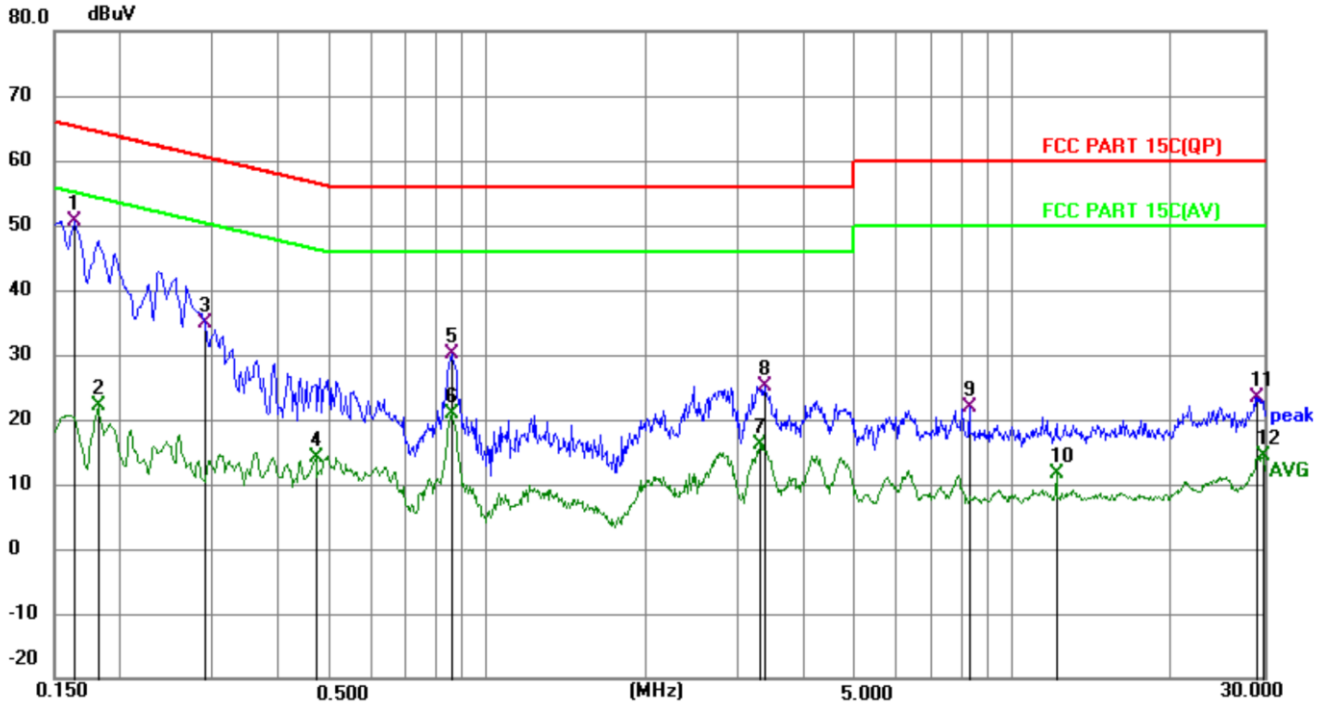

No.	Mk.	Freq.	Reading Level	Correct Factor	Measure-ment	Limit	Over		
		MHz		dB	dBuV	dBuV	dB	Detector	Comment
1	*	0.1635	40.52	10.15	50.67	65.28	-14.61	QP	
2		0.1814	11.89	10.12	22.01	54.42	-32.41	AVG	
3		0.2894	24.84	10.15	34.99	60.54	-25.55	QP	
4		0.4694	3.95	10.07	14.02	46.52	-32.50	AVG	
5		0.8565	19.90	10.19	30.09	56.00	-25.91	QP	
6		0.8565	10.65	10.19	20.84	46.00	-25.16	AVG	
7		3.3000	6.03	10.17	16.20	46.00	-29.80	AVG	
8		3.3765	14.94	10.17	25.11	56.00	-30.89	QP	
9		8.2454	11.51	10.33	21.84	60.00	-38.16	QP	
10		12.0615	1.32	10.39	11.71	50.00	-38.29	AVG	
11		29.1840	12.99	10.32	23.31	60.00	-36.69	QP	
12		29.8904	4.05	10.32	14.37	50.00	-35.63	AVG	

Guangzhou LCS Compliance Testing Laboratory Ltd.
Add: No.44-1, Qianfeng North Road, Shiqi, Panyu District, Guangzhou, Guangdong, China
Tel: +(86) 020-39166689 | E-mail: webmaster@lcs-cert.com | Web: www.lcs-cert.com
Scan code to check authenticity

Neutral

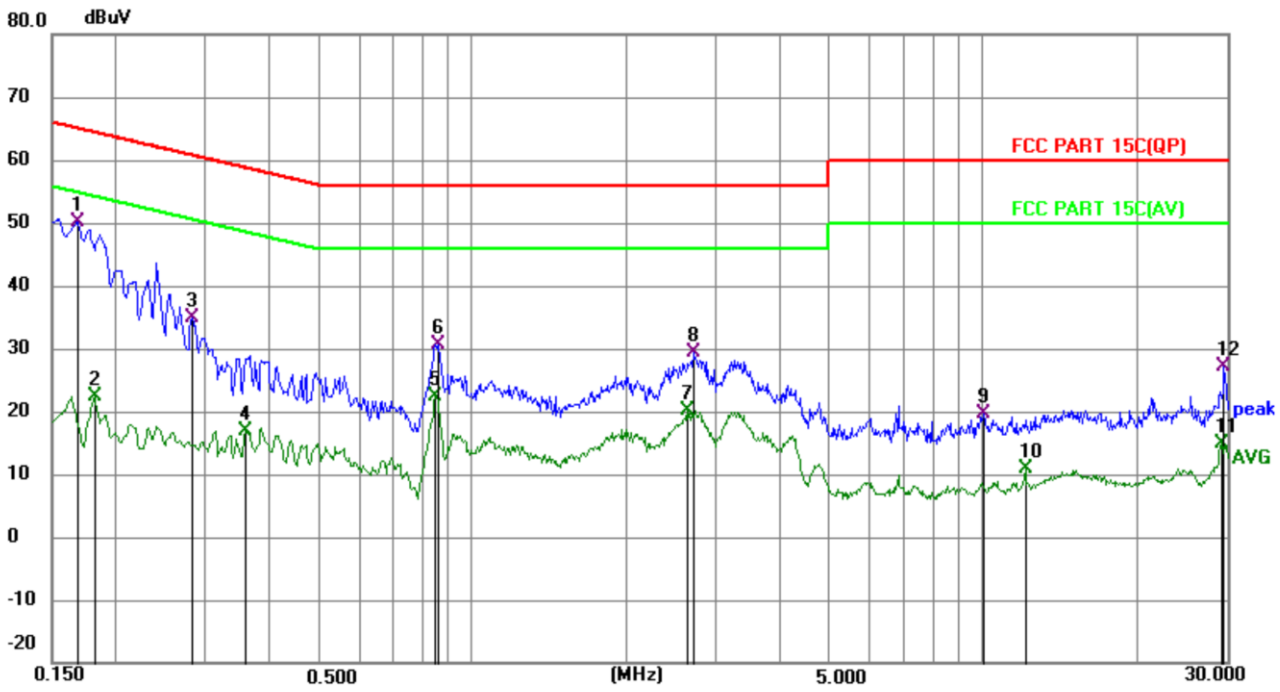

No.	Mk.	Freq.	Reading Level	Correct Factor	Measure-ment	Limit	Over		
		MHz		dB	dBuV	dBuV	dB	Detector	Comment
1	*	0.1680	40.04	10.08	50.12	65.06	-14.94	QP	
2		0.1814	12.39	10.10	22.49	54.42	-31.93	AVG	
3		0.2805	24.82	10.08	34.90	60.80	-25.90	QP	
4		0.3570	6.91	10.08	16.99	48.80	-31.81	AVG	
5		0.8475	12.24	10.10	22.34	46.00	-23.66	AVG	
6		0.8610	20.51	10.10	30.61	56.00	-25.39	QP	
7		2.6295	9.90	10.24	20.14	46.00	-25.86	AVG	
8		2.7105	19.06	10.24	29.30	56.00	-26.70	QP	
9		10.0590	9.39	10.28	19.67	60.00	-40.33	QP	
10		12.0615	0.45	10.33	10.78	50.00	-39.22	AVG	
11		29.2560	4.67	10.33	15.00	50.00	-35.00	AVG	
12		29.6655	16.79	10.34	27.13	60.00	-32.87	QP	

****Note: 1).Pre-scan all modes and recorded the worst case results in this report BT LE mode (1Mbps-Middle Channel).*

2). Measurement = Reading + Correct Factor, Margin = Measurement – Limit,
Correct Factor=Lisn Factor+Cable Factor+Insertion loss of Pulse Limiter.

Guangzhou LCS Compliance Testing Laboratory Ltd.
Add: No.44-1, Qianfeng North Road, Shiqi, Panyu District, Guangzhou, Guangdong, China
Tel: +(86) 020-39166689 | E-mail: webmaster@lcs-cert.com | Web: www.lcs-cert.com
Scan code to check authenticity

5.8. Emissions in Restricted Bands

5.8.1 Standard Applicable

In any 100 kHz bandwidth outside the frequency band in which the spread spectrum or digitally modulated intentional radiator is operating, the radio frequency power that is produced by the intentional radiator shall be at least 20 dB below that in the 100 kHz bandwidth within the band that contains the highest level of the desired power, based on either an RF conducted or a radiated measurement, provided the transmitter demonstrates compliance with the peak conducted power limits. If the transmitter complies with the conducted power limits based on the use of RMS averaging over a time interval, as permitted under paragraph (b)(3) of this section, the attenuation required under this paragraph shall be 30 dB instead of 20 dB. Attenuation below the general limits specified in §15.209(a) is not required. In addition, radiated emissions which fall in the restricted bands, as defined in §15.205(a), must also comply with the radiated emission limits specified in §15.209(a) (see §15.205(c)).

5.8.2. Test Setup Layout

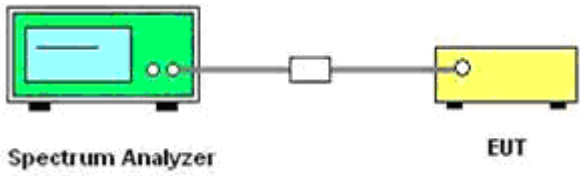

5.8.3. Measuring Instruments and Setting

Please refer to equipment list in this report. The following table is the setting of Spectrum Analyzer.

5.8.4. Test Procedures

According to KDB558074 D01 15.247 Meas Guidance v05r02 for Antenna-port conducted measurement. Antenna-port conducted measurements may also be used as an alternative to radiated measurements for demonstrating compliance in the restricted frequency bands. If conducted measurements are performed, then proper impedance matching must be ensured and an additional radiated test for cabinet/case spurious emissions is required.
1). Check the calibration of the measuring instrument using either an internal calibrator or a known signal from an external generator.
2). Remove the antenna from the EUT and then connect to a low loss RF cable from the antenna port to an EMI test receiver, then turn on the EUT and make it operate in transmitting mode. Then set it to Low Channel and High Channel within its operating range, and make sure the instrument is operated in its linear range.
3). Set both RBW and VBW of spectrum analyzer to 100 kHz with a convenient frequency span including 100kHz bandwidth from band edge, for Radiated emissions restricted band RBW=1MHz, VBW=3MHz for peak detector and RBW=1MHz, VBW=1/T for AV detector.
4). Measure the highest amplitude appearing on spectral display and set it as a reference level. Plot the graph with marking the highest point and edge frequency.
5). Repeat above procedures until all measured frequencies were complete.
6). Measure the conducted output power (in dBm) using the detector specified by the appropriate regulatory agency (see 12.2.2, 12.2.3, and 12.2.4 for guidance regarding measurement procedures for determining quasi-peak, peak, and average conducted output power, respectively).
7). Add the maximum transmit antenna gain (in dBi) to the measured output power level to determine the EIRP level (see 12.2.5 for guidance on determining the applicable antenna gain)
8). Add the appropriate maximum ground reflection factor to the EIRP level (6 dB for frequencies ≤ 30 MHz, 4.7 dB for frequencies between 30 MHz and 1000 MHz, inclusive and 0 dB for frequencies > 1000 MHz).
9). For devices with multiple antenna-ports, measure the power of each individual chain and sum the EIRP of all chains in linear terms (e.g., Watts, mW).
10). Convert the resultant EIRP level to an equivalent electric field strength using the following relationship:

$$E = EIRP – 20\log D + 104.8 = EIRP + 95.26$$

Guangzhou LCS Compliance Testing Laboratory Ltd.
Add: No.44-1, Qianfeng North Road, Shiqi, Panyu District, Guangzhou, Guangdong, China
Tel: +(86) 020-39166689 | E-mail: webmaster@lcs-cert.com | Web: www.lcs-cert.com
Scan code to check authenticity

Where:
E = electric field strength in dBμV/m,
EIRP = equivalent isotropic radiated power in dBm
D = specified measurement distance in meters.
11). Since the out-of-band characteristics of the EUT transmit antenna will often be unknown, the use of a conservative antenna gain value is necessary. Thus, when determining the EIRP based on the measured conducted power, the upper bound on antenna gain for a device with a single RF output shall be selected as the maximum in-band gain of the antenna across all operating bands, or 2 dBi, whichever is greater. However, for devices that operate in multiple frequency bands while using the same transmit antenna, the highest gain of the antenna within the operating band nearest in frequency to the restricted band emission being measured may be used in lieu of the overall highest gain when the emission is at a frequency that is within 20 percent of the nearest band edge frequency, but in no case shall a value less than 2 dBi be used.
12). Compare the resultant electric field strength level to the applicable regulatory limit.
13). Perform radiated spurious emission test duress until all measured frequencies were complete.

5.8.5 Test Results

PASS

Please refer to Appendix A.7

Remark:
1). Test results including cable loss;
2). "---"means that the fundamental frequency not for 15.209 limits requirement;
3). The average measurement was not performed when the peak measured data under the limit of average detection.
4). Detector AV is setting spectrum/receiver. RBW=1MHz/VBW=1/T/Sweep time=Auto/Detector=Peak.
5). Since the out-of-band characteristics of the EUT transmit antenna will often be unknown, the use of a conservative antenna gain value is necessary. Thus, when determining the EIRP based on the measured conducted power, the upper bound on antenna gain for a device with a single RF output shall be selected as the maximum in-band gain of the antenna across all operating bands, or 2 dBi, whichever is greater. However, for devices that operate in multiple frequency bands while using the same transmit antenna, the highest gain of the antenna within the operating band nearest in frequency to the restricted band emission being measured may be used in lieu of the overall highest gain when the emission is at a frequency that is within 20 percent of the nearest band edge frequency, but in no case shall a value less than 2 dBi be used.

Guangzhou LCS Compliance Testing Laboratory Ltd.
Add: No.44-1, Qianfeng North Road, Shiqi, Panyu District, Guangzhou, Guangdong, China
Tel: +(86) 020-39166689 | E-mail: webmaster@lcs-cert.com | Web: www.lcs-cert.com
Scan code to check authenticity

5.9. Antenna Requirements

5.9.1 Standard Applicable

According to antenna requirement of §15.203.

An intentional radiator shall be designed to ensure that no antenna other than that furnished by the responsible party shall be used with the device. The use of a permanently attached antenna or of an antenna that uses a unique coupling to the intentional radiator shall be considered sufficient to comply with the provisions of this Section. The manufacturer may design the unit so that a broken antenna can be re-placed by the user, but the use of a standard antenna jack or electrical connector is prohibited. This requirement does not apply to carrier current devices or to devices operated under the provisions of Sections 15.211, 15.213, 15.217, 15.219, or 15.221. Further, this requirement does not apply to intentional radiators that must be professionally installed, such as perimeter protection systems and some field disturbance sensors, or to other intentional radiators which, in accordance with Section 15.31(d), must be measured at the installation site. However, the installer shall be responsible for ensuring that the proper antenna is employed so that the limits in this Part are not exceeded.

And according to §15.247(4)(1), system operating in the 2400-2483.5MHz bands that are used exclusively for fixed, point-to-point operations may employ transmitting antennas with directional gain greater than 6dBi provided the maximum peak output power of the intentional radiator is reduced by 1 dB for every 3 dB that the directional gain of the antenna exceeds 6dBi.

5.9.2 Antenna Connected Construction

5.9.2.1. Standard Applicable

According to § 15.203, an intentional radiator shall be designed to ensure that no antenna other than that furnished by the responsible party shall be used with the device.

5.9.2.2. Antenna Connector Construction

The gains of antenna used for transmitting is 1.36dBi(Max.), and the antenna is PCB Antenna and no consideration of replacement. Please see EUT photo for details.

5.9.2.3. Results: Compliance.

Guangzhou LCS Compliance Testing Laboratory Ltd.
Add: No.44-1, Qianfeng North Road, Shiqi, Panyu District, Guangzhou, Guangdong, China
Tel: +(86) 020-39166689 | E-mail: webmaster@lcs-cert.com | Web: www.lcs-cert.com
Scan code to check authenticity

6. LIST OF MEASURING EQUIPMENTS

Item	Equipment	Manufacturer	Model No.	Equipment No.	Cal Date	Due Date
1	Power Meter	Keysight	E4417A	GLCS-E-279	2026-04-07	2027-04-06
2	Power Sensor	Keysight	E9304A	GLCS-E-280	2026-04-07	2027-04-06
3	Power Sensor	Keysight	E9304A	GLCS-E-281	2026-04-07	2027-04-06
4	Spread Spectrum Unit	Tonscend	TS-WF7U2	GLCS-E-364	N/A	N/A
5	Test Software	Tonscend	JS1120-3	GLCS-E-366	N/A	N/A
6	RF Control Unit	Tonscend	JS0806-2	GLCS-E-365	2026-07-15	2027-07-14
7	MXA Signal Analyzer	Keysight	N9020A	GLCS-E-356	2026-07-15	2027-07-14
8	DC Power Supply	Keysight	E3642A	GLCS-E-357	2026-07-15	2027-07-14
9	Signal Analyzer	Keysight	N5172B	GLCS-E-353	2026-07-15	2027-07-14
10	Signal Analyzer	Keysight	N5181A	GLCS-E-354	2026-07-15	2027-07-14
11	WIDEBAND RADIO COMMUNICATION TESTER	Rohde & Schwarz	CMW500	GLCS-E-355	2026-07-15	2027-07-14
12	EMI Test Software	Farad	EZ-EMC(Ver.FA-03A2 RE+)	GLCS-E-012	N/A	N/A
13	Semi Anechoic Chamber#1	Maorui	966	GLCS-E-001	2024-04-21	2027-04-20
14	Positioning Controller	Max-Full	MF-7802	GLCS-E-015	N/A	N/A
15	Active Loop Antenna	TESEQ	HLA 6121	GLCS-E-155	2026-07-17	2027-07-16
16	By-log Antenna	SCHWARZBECK	VULB9163	GLCS-E-352	2025-08-16	2028-08-15
17	Low-frequency amplifier	Sonoma	310N	GLCS-E-036	2026-04-07	2027-04-06
18	Horn Antenna	SCHWARZBECK	BBHA 9120D	GLCS-E-060	2026-07-17	2027-07-16
19	Broadband Horn Antenna	SCHWARZBECK	BBHA 9170	GLCS-E-348	2025-08-18	2028-08-17
20	Broadband Preamplifier	Cesheng Technology	LNPA_30M06G-40(18GHz)	GLCS-E-286	2026-04-07	2027-04-06
21	Broadband Preamplifier	Cesheng Technology	LNPA 30M06G-40(40GHz)	GLCS-E-287	2026-04-10	2027-04-09
22	EMI Test Receiver	R&S	ESR 7	GLCS-E-192	2026-04-07	2027-04-06
23	RS SPECTRUM ANALYZER	R&S	FSP40	GLCS-E-213	2026-08-05	2027-08-04
24	6dB Attenuator	/	100W/6dB	GLCS-E-350	2026-07-15	2027-07-14
25	3dB Attenuator	/	2N-3dB	GLCS-E-351	2026-07-09	2027-07-08
26	EMI Test Receiver	ROHDE & SCHWARZ	ESR7	GLCS-E-158	2026-04-07	2027-04-06
27	Artificial Mains Network	ROHDE & SCHWARZ	ESH2-Z5	GLCS-E-011	2026-01-14	2027-01-13
28	EMI Test Software	Farad	EZ-EMC(Ver.FA-03A2 RE+)	GLCS-E-017	N/A	N/A
29	Antenna Mast	Maorui	BK-4AT-BS	GLCS-E-249	N/A	N/A
30	Pulse Limiter	SCHWARZBECK	VTSD 9561-F	GLCS-E-080	2026-04-07	2027-04-06

Guangzhou LCS Compliance Testing Laboratory Ltd.
Add: No.44-1, Qianfeng North Road, Shiqi, Panyu District, Guangzhou, Guangdong, China
Tel: +(86) 020-39166689 | E-mail: webmaster@lcs-cert.com | Web: www.lcs-cert.com
Scan code to check authenticity

7. TEST SETUP PHOTOGRAPHS OF EUT

Please refer to separated files for Test Setup Photos of the EUT.

8. EXTERIOR PHOTOGRAPHS OF THE EUT

Please refer to separated files for External Photos of the EUT.

9. INTERIOR PHOTOGRAPHS OF THE EUT

Please refer to separated files for Internal Photos of the EUT.

----------THE END OF REPORT----------

Guangzhou LCS Compliance Testing Laboratory Ltd.
Add: No.44-1, Qianfeng North Road, Shiqi, Panyu District, Guangzhou, Guangdong, China
Tel: +(86) 020-39166689 | E-mail: webmaster@lcs-cert.com | Web: www.lcs-cert.com
Scan code to check authenticity