FCC Part 15C Test Report
FCC ID: 2BXFF-M8

Applicant:	Shenzhen Minghongjiang Electronic Technology Co., LTD
Address:	Room 401, Building 2, Pengda Company, Xueyuan Road, Longxi Community, Longgang Subdistrict, Longgang District, Shenzhen City
Manufacturer:	Shenzhen Minghongjiang Electronic Technology Co., LTD
Address:	Room 401, Building 2, Pengda Company, Xueyuan Road, Longxi Community, Longgang Subdistrict, Longgang District, Shenzhen City
Product Name:	Motorcycle walkie-talkie headset
Trade Mark:	N/A
Model Number:	M8, M6, M9
Date of Receipt:	Jul. 13, 2026
Test Date:	Jul. 13, 2026 – Jul. 20, 2026
Date of Report:	Jul. 20, 2026
Prepared By:	Shenzhen DL Testing Technology Co., Ltd.
Address:	101-201, Building C, Shuanghuan, No.8, Baoqing Road, Baolong Industrial Zone, Baolong Street, Longgang District, Shenzhen, Guangdong, China
Applicable Standards:	FCC PART 15 C 15.247 ANSI C63.10-2020 + Cor. 1-2023+C63.10a-2024 + Errata to C63.10a-2024
Test Result:	Pass
Report Number:	DLE-260713004R

Prepared (Test Engineer):	Ken Tan
Reviewer (Supervisor):	Jack Bu
Approved (Manager):	Jade Yang

This test report is based on a single evaluation of one sample of above mentioned products. It is not permitted to be duplicated in extracts without written approval of Shenzhen DL Testing Technology Co., Ltd.

Table of Contents **Page**

1 . SUMMARY OF TEST RESULTS 4
1.1 MEASUREMENT UNCERTAINTY 4
2 . GENERAL INFORMATION 5
2.1 GENERAL DESCRIPTION OF EUT 5
2.2 DESCRIPTION OF TEST MODES 6
2.3 BLOCK DIGRAM SHOWING THE CONFIGURATION OF SYSTEM TESTED 6
2.4 DESCRIPTION OF SUPPORT UNITS(CONDUCTED MODE) 7
2.5 TABLE OF PARAMETERS OF TEST SOFTWARE SETTING 7
2.6 EQUIPMENTS LIST FOR ALL TEST ITEMS 8
3 . EMC EMISSION TEST 9
3.1 CONDUCTED EMISSION MEASUREMENT 9
3.1.1 POWER LINE CONDUCTED EMISSION LIMITS 9
3.1.2 TEST PROCEDURE 9
3.1.3 DEVIATION FROM TEST STANDARD 9
3.1.4 TEST SETUP 10
3.1.5 EUT OPERATING CONDITIONS 10
3.1.6 TEST RESULTS 10
3.2 RADIATED EMISSION MEASUREMENT 13
3.2.1 RADIATED EMISSION LIMITS 13
3.2.2 TEST PROCEDURE 14
3.2.3 DEVIATION FROM TEST STANDARD 14
3.2.4 TEST SETUP 14
3.2.5 EUT OPERATING CONDITIONS 15
3.2.6 TEST RESULTS (BETWEEN 9KHZ – 30 MHZ) 16
3.2.7 TEST RESULTS (BETWEEN 30MHZ – 1GHZ) 17
3.2.8 TEST RESULTS (1GHZ~25GHZ) 19
3.3 RADIATED BAND EMISSION MEASUREMENT 22
3.3.1 TEST REQUIREMENT: 22
3.3.2 TEST PROCEDURE 22
3.3.3 DEVIATION FROM TEST STANDARD 22
3.3.4 TEST SETUP 23
3.3.5 EUT OPERATING CONDITIONS 23
4 . PEAK OUTPUT POWER 28
4.1 APPLIED PROCEDURES / LIMIT 28
4.1.1 TEST PROCEDURE 28
4.1.2 DEVIATION FROM STANDARD 28
4.1.3 TEST SETUP 28
4.1.4 EUT OPERATION CONDITIONS 28

Table of Contents **Page**

4.1.5 TEST RESULTS 28

5 . NUMBER OF HOPPING CHANNEL 29

5.1 APPLIED PROCEDURES / LIMIT 29

5.1.1 TEST PROCEDURE 29

5.1.2 DEVIATION FROM STANDARD 29

5.1.3 TEST SETUP 29

5.1.4 EUT OPERATION CONDITIONS 29

5.1.5 TEST RESULTS 29

6 . BANDWIDTH TEST 30

6.1 APPLIED PROCEDURES / LIMIT 30

6.1.1 TEST PROCEDURE 30

6.1.2 DEVIATION FROM STANDARD 30

6.1.3 TEST SETUP 30

6.1.4 EUT OPERATION CONDITIONS 30

6.1.5 TEST RESULTS 30

7 . HOPPING CHANNEL SEPARATION MEASUREMENT 31

7.1 APPLIED PROCEDURES / LIMIT 31

7.1.1 TEST PROCEDURE 31

7.1.2 DEVIATION FROM STANDARD 31

7.1.3 TEST SETUP 31

7.1.4 EUT OPERATION CONDITIONS 31

7.1.5 TEST RESULTS 31

8 . DWELL TIME OF OCCUPANCY 32

8.1 APPLIED PROCEDURES / LIMIT 32

8.1.1 TEST PROCEDURE 32

8.1.2 DEVIATION FROM STANDARD 32

8.1.3 TEST SETUP 32

8.1.4 EUT OPERATION CONDITIONS 32

8.1.5 TEST RESULTS 32

9 . ANTENNA REQUIREMENT 33

9.1 STANDARD REQUIREMENT 33

9.2 EUT ANTENNA 33

10 . TEST SETUP PHOTO 33

11 . EUT PHOTO 33

1. SUMMARY OF TEST RESULTS

Test procedures according to the technical standards:

FCC Part15 (15.247) , Subpart C			
Standard Section	Test Item	Judgment	Remark
15.207	Conducted Emission	PASS	
15.247(c)	Radiated Spurious Emission	PASS	
15.205	Band Edge Emission	PASS	
15.247(b)(1)	Peak Output Power	PASS	
15.247(a)(iii)	Number of Hopping Frequency	PASS	
15.247(a)(iii)	Dwell Time	PASS	
15.247(a)(1)	Bandwidth	PASS	
15.247(a)(1)	Hopping Channel Separation	PASS	
15.203	Antenna Requirement	PASS	

NOTE:

(1)" N/A" denotes test is not applicable in this Test Report

Test lab: Shenzhen DL Testing Technology Co., Ltd.

Address: 101-201, Comprehensive Building, Tongzhou Electronics Longgang Factory Area, No.1 Baolong Fifth Road, Baolong Community, Baolong Street, Longgang District, Shenzhen, China

FCC Test Firm Registration Number: 854456
Designation Number: CN1307
IC Registered No.: 27485
CAB ID.: CN0118

1.1 MEASUREMENT UNCERTAINTY

The reported uncertainty of measurement **y** ± **U**, where expended uncertainty **U** is based on a standard uncertainty multiplied by a coverage factor of **k=2**，providing a level of confidence of approximately **95** %。

No.	Item	Uncertainty
1	Conducted Emission Test	±2.56dB
2	RF power,conducted	±0.42dB
3	Spurious emissions,conducted	±2.76dB
4	All emissions,radiated(<1G)	±3.65dB
5	All emissions,radiated(>1G)	±4.89dB
6	Temperature	±0.5°C
7	Humidity	±2%
8	20dB Bandwidth	±0.2MHz

2. GENERAL INFORMATION

2.1 GENERAL DESCRIPTION OF EUT

Product Name:	Motorcycle walkie-talkie headset
Trade Mark:	N/A
Model Number:	M8, M6, M9
Model Difference	All models are same as the samples except model name and color, they have the same structure and circuit.
Operation Frequency:	2402~2480MHz
Channel numbers:	79 Channels
Channel separation:	1MHz
Modulation technology:	GFSK, π/4 DQPSK, 8DPSK
Antenna Type:	Internal Antenna
Antenna gain:	2.7dBi
Power supply:	DC 3.7V from battery DC 5V from charger

Note:

1.For a more detailed features description, please refer to the manufacturer's specifications or the User's Manual.

2.The EUT's all information provided by client.

3.The components and schematic diagram of the left earphone and the right earphone of this product are the same, but the relevant component layout is slightly different. Both are non-RF partial circuits, and both the left and right headphones are tested, recording only the worst case right headphones.

2.

Channel List					
Channel	Frequency (MHz)	Channel	Frequency (MHz)	Channel	Frequency (MHz)
00	2402	27	2429	54	2456
01	2403	28	2430	55	2457
02	2404	29	2431	56	2458
~	~	~	~	~	~
08	2410	35	2437	62	2464
09	2411	36	2438	63	2465
10	2412	37	2439	64	2466
11	2413	38	2441	65	2467
12	2414	39	2441	66	2468
13	2415	40	2442	67	2469
~	~	~	~	~	~
14	2416	41	2443	68	2470
22	2424	49	2451	76	2478
23	2425	50	2452	77	2479
24	2426	51	2453	78	2480
25	2427	52	2454		
26	2428	53	2455		

2.2 DESCRIPTION OF TEST MODES

To investigate the maximum EMI emission characteristics generates from EUT, the test system was pre-scanning tested base on the consideration of following EUT operation mode or test configuration mode which possible have effect on EMI emission level. Each of these EUT operation mode(s) or test configuration mode(s) mentioned above was evaluated respectively.

Pretest Mode	Modulation	Channel
Mode 1	GFSK	CH00
Mode 2		CH39
Mode 3		CH78
Mode 4	PI/4 DQPSK	CH00
Mode 5		CH39
Mode 6		CH78
Mode 7	8DPSK	CH00
Mode 8		CH39
Mode 9		CH78

Note: (1) The measurements are performed at the highest, middle, lowest available channels.
(2) For the two items of conducted disturbance at the power supply end and space radiation below 1GHz, all modes have undergone pre-tests. The report only shows the worst test results of mode 6.

2.3 BLOCK DIGRAM SHOWING THE CONFIGURATION OF SYSTEM TESTED

Radiated Spurious Emission Test

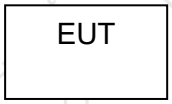

Power line conducted emission Test

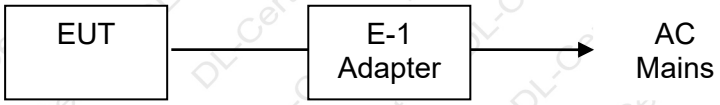

2.4 DESCRIPTION OF SUPPORT UNITS(CONDUCTED MODE)

The EUT has been tested as an independent unit together with other necessary accessories or support units. The following support units or accessories were used to form a representative test configuration during the tests.

Item	Equipment	Model/Type No.	Series No.	Note
E-1	Adapter	HW-0501000E	N/A	XIAOMI

Item	Shielded Type	Ferrite Core	Length	Note

Note:

(1) For detachable type I/O cable should be specified the length in cm in 『Length』 column.

2.5 TABLE OF PARAMETERS OF TEST SOFTWARE SETTING

During testing, channel & power controlling software provided by the customer was used to control the operating channel as well as the output power level. The RF output power selection is for the setting of RF output power expected by the customer and is going to be fixed on the end product.

Test software Version	Test program: RF Test_V1.2		
Frequency	2402 MHz	2441 MHz	2480 MHz
Power Setting of Softwave	10	10	10

2.6 EQUIPMENTS LIST FOR ALL TEST ITEMS

Radiation test, Band-edge test and 20db bandwidth test equipment

Item	Equipment	Manufacturer	Type No.	Serial No.	Last calibration	Calibrated until
1	Spectrum Analyzer (9kHz-26.5GHz)	Agilent	E4408B	MY50140780	Oct. 25, 2025	Oct. 24, 2026
2	Test Receiver (9kHz-7GHz)	R&S	ESRP7	101393	Oct. 25, 2025	Oct. 24, 2026
3	Bilog Antenna (30MHz-1GHz)	R&S	VULB9162	00306	Oct. 25, 2025	Oct. 24, 2026
4	Horn Antenna (1GHz-18GHz)	Schwarzbeck	BBHA9120D	02139	Oct. 26, 2025	Oct. 25, 2026
5	Horn Antenna (18GHz-40GHz)	A.H. Systems	SAS-574	588	Oct. 25, 2025	Oct. 24, 2026
6	Amplifier (9KHz-6GHz)	Schwarzbeck	BBV9743B	00153	Oct. 25, 2025	Oct. 24, 2026
7	Amplifier (1GHz-18GHz)	EMEC	EM01G8GA	00270	Oct. 25, 2025	Oct. 24, 2026
8	Amplifier (18GHz-40GHz)	Quanjuda	DLE-161	97	Oct. 25, 2025	Oct. 24, 2026
9	Loop Antenna (9KHz-30MHz)	Schwarzbeck	FMZB1519B	00014	Oct. 25, 2025	Oct. 24, 2026
10	RF cables1 (9kHz-1GHz)	ChengYu	966	004	Oct. 25, 2025	Oct. 24, 2026
11	RF cables2 (1GHz-40GHz)	ChengYu	966	003	Oct. 25, 2025	Oct. 24, 2026
12	Antenna connector	Florida RF Labs	N/A	RF 01#	Oct. 25, 2025	Oct. 24, 2026
13	Power probe	KEYSIGHT	U2021XA	MY55210018	Oct. 25, 2025	Oct. 24, 2026
14	Signal Analyzer 9kHz-26.5GHz	Agilent	N9020A	MY55370280	Oct. 25, 2025	Oct. 24, 2026
15	Test Receiver 20kHz-40GHz	R&S	ESU 40	100376	Oct. 25, 2025	Oct. 24, 2026
16	D.C. Power Supply	LongWei	PS-305D	010964729	Oct. 25, 2025	Oct. 24, 2026
17	Temperature & humidity chamber	Changfeng	CF-150-40-P	CF170802-01	Oct. 25, 2025	Oct. 24, 2026
18	966 chamber	YIHENG	966 Room	966	Nov. 06, 2023	Nov. 05, 2026

Conduction Test equipment

Item	Equipment	Manufacturer	Type No.	Serial No.	Last calibration	Calibrated until
1	843 Shielded Room	YIHENG	843 Room	843	Nov. 05, 2023	Nov. 04, 2026
2	EMI Receiver	R&S	ESR	101421	Oct. 25, 2025	Oct. 24, 2026
3	LISN	R&S	ENV216	102417	Oct. 25, 2025	Oct. 24, 2026
4	843 Cable 1#	ChengYu	CE Cable	001	Oct. 25, 2025	Oct. 24, 2026

Other

Item	Name	Manufacturer	Model	Software version
1	EMC Conduction Test System	FALA	EZ_EMC	EMC-CON 3A1.1
2	EMC radiation test system	FALA	EZ_EMC	FA-03A2
3	RF test system	MAIWEI	MTS8310	2.0.0.0
4	RF communication test system	MAIWEI	MTS8200	2.0.0.0

3. EMC EMISSION TEST

3.1 CONDUCTED EMISSION MEASUREMENT

3.1.1 POWER LINE CONDUCTED EMISSION Limits (Frequency Range 150KHz-30MHz)

FREQUENCY (MHz)	Limit (dBuV)		Standard
	Quasi-peak	Average	
0.15 -0.5	66 - 56 *	56 - 46 *	FCC
0.50 -5.0	56.00	46.00	FCC
5.0 -30.0	60.00	50.00	FCC

Note:

(1) The tighter limit applies at the band edges.

(2) The limit of " * " marked band means the limitation decreases linearly with the logarithm of the frequency in the range.

The following table is the setting of the receiver

Receiver Parameters	Setting
Attenuation	10 dB
Start Frequency	0.15 MHz
Stop Frequency	30 MHz
IF Bandwidth	9 kHz

3.1.2 TEST PROCEDURE

a. The EUT was placed 0.8 meters from the horizontal ground plane with EUT being connected to the power mains through a line impedance stabilization network (LISN). All other support equipments powered from additional LISN(s). The LISN provide 50 Ohm/ 50uH of coupling impedance for the measuring instrument.

b. Interconnecting cables that hang closer than 40 cm to the ground plane shall be folded back and forth in the center forming a bundle 30 to 40 cm long.

c. I/O cables that are not connected to a peripheral shall be bundled in the center. The end of the cable may be terminated, if required, using the correct terminating impedance. The overall length shall not exceed 1 m.

d. LISN at least 80 cm from nearest part of EUT chassis.

e. For the actual test configuration, please refer to the related Item –EUT Test Photos.

3.1.3 DEVIATION FROM TEST STANDARD

No deviation

3.1.4 TEST SETUP

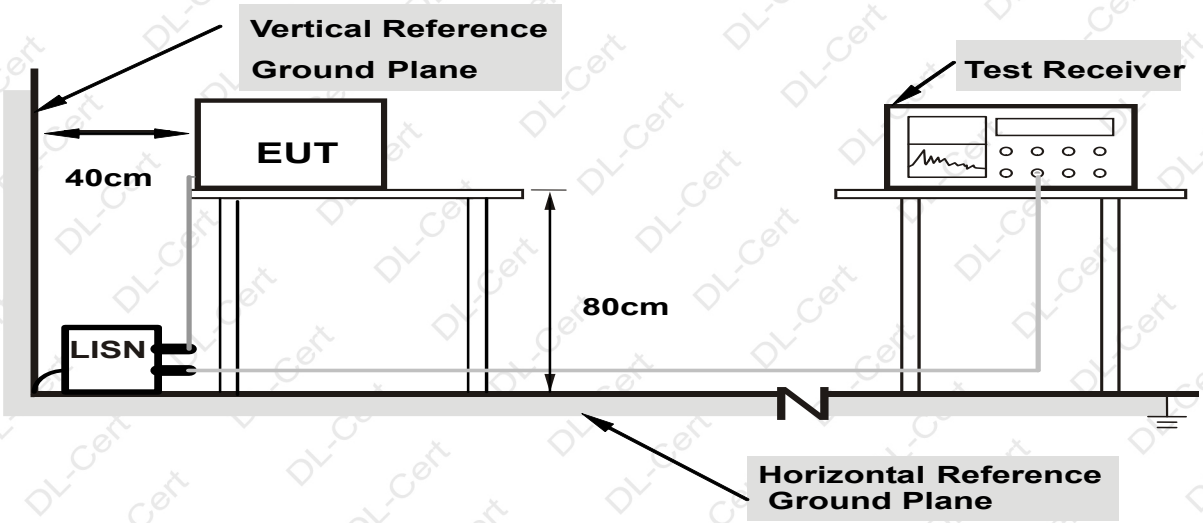

Note: 1.Support units were connected to second LISN.
2.Both of LISNs (AMN) are 80 cm from EUT and at least 80 cm from other units and other metal planes

3.1.5 EUT OPERATING CONDITIONS

The EUT was configured for testing in a typical fashion (as a customer would normally use it). The EUT has been programmed to continuously transmit during test. This operating condition was tested and used to collect the included data.
We pretest AC 120V and AC 230V, the worst voltage was AC 120V and the data recording in the report.

3.1.6 TEST RESULTS

PASS
Please refer to the following page.

Temperature:	25 ℃	Relative Humidity:	54%
Pressure:	1010hPa	Phase :	L
Test Voltage :	AC 120V/60Hz	Test Mode:	Mode 6

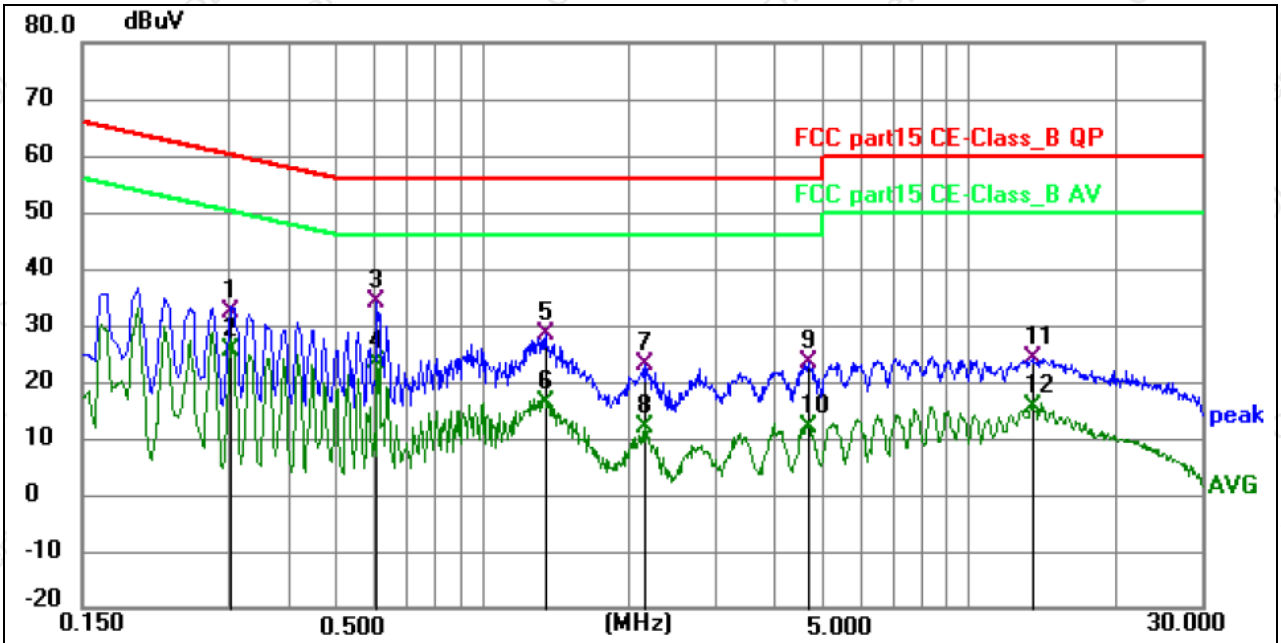

No.	Frequency (MHz)	Reading (dBuV)	Factor (dB)	Level (dBuV)	Limit (dBuV)	Margin (dB)	Detector	P/F	Remark
1	0.3030	22.22	10.01	32.23	60.16	-27.93	QP	P	
2	0.3030	15.67	10.01	25.68	50.16	-24.48	AVG	P	
3 *	0.6045	24.11	9.90	34.01	56.00	-21.99	QP	P	
4	0.6045	13.65	9.90	23.55	46.00	-22.45	AVG	P	
5	1.3470	18.44	9.82	28.26	56.00	-27.74	QP	P	
6	1.3470	6.27	9.82	16.09	46.00	-29.91	AVG	P	
7	2.1525	13.10	9.90	23.00	56.00	-33.00	QP	P	
8	2.1525	2.14	9.90	12.04	46.00	-33.96	AVG	P	
9	4.6725	13.22	10.10	23.32	56.00	-32.68	QP	P	
10	4.6725	1.95	10.10	12.05	46.00	-33.95	AVG	P	
11	13.6185	13.96	10.19	24.15	60.00	-35.85	QP	P	
12	13.6185	5.19	10.19	15.38	50.00	-34.62	AVG	P	

Remark:

Margin = Limit – Level, Correct Factor = Cable lose + LISN insertion loss, Level= Reading + Correct factor

Temperature:	25 ℃	Relative Humidity:	54%
Pressure:	1010hPa	Phase :	N
Test Voltage :	AC 120V/60Hz	Test Mode:	Mode 6

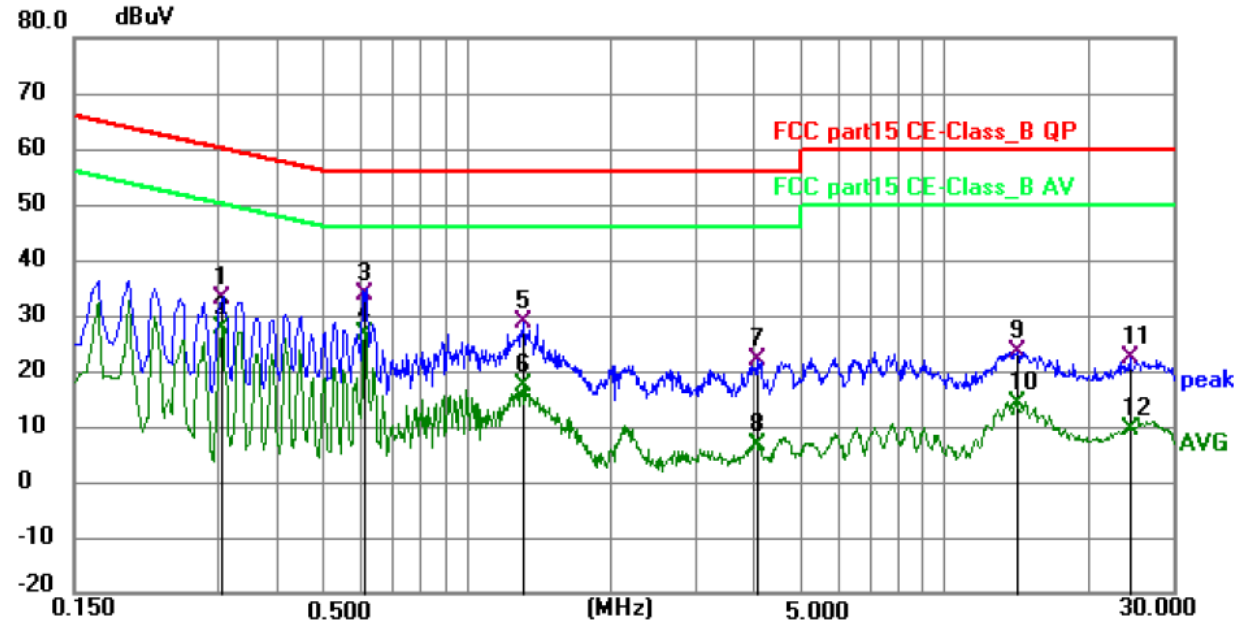

No.	Frequency (MHz)	Reading (dBuV)	Factor (dB)	Level (dBuV)	Limit (dBuV)	Margin (dB)	Detector	P/F	Remark
1	0.3075	23.16	9.96	33.12	60.04	-26.92	QP	P	
2	0.3075	17.66	9.96	27.62	50.04	-22.42	AVG	P	
3	0.6134	23.88	9.87	33.75	56.00	-22.25	QP	P	
4 *	0.6134	16.77	9.87	26.64	46.00	-19.36	AVG	P	
5	1.3110	18.93	9.91	28.84	56.00	-27.16	QP	P	
6	1.3110	7.32	9.91	17.23	46.00	-28.77	AVG	P	
7	4.0290	11.90	10.06	21.96	56.00	-34.04	QP	P	
8	4.0290	-3.48	10.06	6.58	46.00	-39.42	AVG	P	
9	14.1495	13.21	10.18	23.39	60.00	-36.61	QP	P	
10	14.1495	3.93	10.18	14.11	50.00	-35.89	AVG	P	
11	24.4680	11.95	10.28	22.23	60.00	-37.77	QP	P	
12	24.4680	-0.85	10.28	9.43	50.00	-40.57	AVG	P	

Remark:

Margin = Limit – Level, Correct Factor = Cable lose + LISN insertion loss, Level= Reading + Correct factor

3.2 RADIATED EMISSION MEASUREMENT

3.2.1 RADIATED EMISSION LIMITS (Frequency Range 9kHz-1000MHz)

In case the emission fall within the restricted band specified on 15.205(a), then the 15.209(a) limit in the table below has to be followed.

Frequencies (MHz)	Field Strength (micorvolts/meter)	Measurement Distance (meters)
0.009~0.490	2400/F(KHz)	300
0.490~1.705	24000/F(KHz)	30
1.705~30.0	30	30
30~88	100	3
88~216	150	3
216~960	200	3
Above 960	500	3

LIMITS OF RADIATED EMISSION MEASUREMENT (Above 1000MHz)

FREQUENCY (MHz)	Limit (dBuV/m) (at 3M)	
	PEAK	AVERAGE
Above 1000	74	54

Notes:

(1) The limit for radiated test was performed according to FCC PART 15C.

(2) The tighter limit applies at the band edges.

(3) Emission level (dBuV/m)=20log Emission level (uV/m).

(4) Emissions radiated outside of the specified frequency bands, except for harmonics, shall be attenuated by at least 50 dB below the level of the fundamental or to the general radiated emission limits in § 15.209, whichever is the lesser attenuation.

Spectrum Parameter	Setting
Attenuation	Auto
Start Frequency	1000 MHz
Stop Frequency	25GHz
RB / VB (emission in restricted band)	1 MHz / 1 MHz for Peak, 1 MHz / 10Hz for Average

Receiver Parameter	Setting
Attenuation	Auto
Start ~ Stop Frequency	9kHz~150kHz / RB 200Hz for QP
Start ~ Stop Frequency	150kHz~30MHz / RB 9kHz for QP
Start ~ Stop Frequency	30MHz~1000MHz / RB 120kHz for QP

3.2.2 TEST PROCEDURE

Below 1GHz test procedure as below:

a. The EUT was placed on the top of a rotating table 0.8 meters above the ground at a 3 meter semi-anechoic camber. The table was rotated 360 degrees to determine the position of the highest radiation.
b. The EUT was set 3 meters away from the interference-receiving antenna, which was mounted on the top of a variable-height antenna tower.
c. The antenna height is varied from one meter to four meters above the ground to determine the maximum value of the field strength. Both horizontal and vertical polarizations of the antenna are set to make the measurement.
d. For each suspected emission, the EUT was arranged to its worst case and then the antenna was tuned to heights from 1 meter to 4 meters (for the test frequency of below 30MHz, the antenna was tuned to heights 1 meter) and the rotatable table was turned from 0 degrees to 360 degrees to find the maximum reading.
e. The test-receiver system was set to Peak Detect Function and Specified Bandwidth with Maximum Hold Mode.
f. If the emission level of the EUT in peak mode was 10dB lower than the limit specified, then testing could be stopped and the peak values of the EUT would be reported. Otherwise the emissions that did not have 10dB margin would be re-tested one by one using peak, quasi-peak or average method as specified and then reported in a data sheet.

Above 1GHz test procedure as below:

g. Different between above is the test site, change from Semi- Anechoic Chamber to fully Anechoic Chamber (Above 18GHz the distance is 1.5 meter).
h. Test the EUT in the lowest channel ,the middle channel ,the Highest channel

Note:
The horizontal and vertical polarities of the antenna were tested, and a pre-test was conducted on the EUT placement as three orthogonal axes X,Y,Z. The worst display of the test results was the Y-axis. The worst case emissions were reported.

3.2.3 DEVIATION FROM TEST STANDARD

No deviation

3.2.4 TEST SETUP

（A）Radiated Emission Test-Up Frequency Below 30MHz

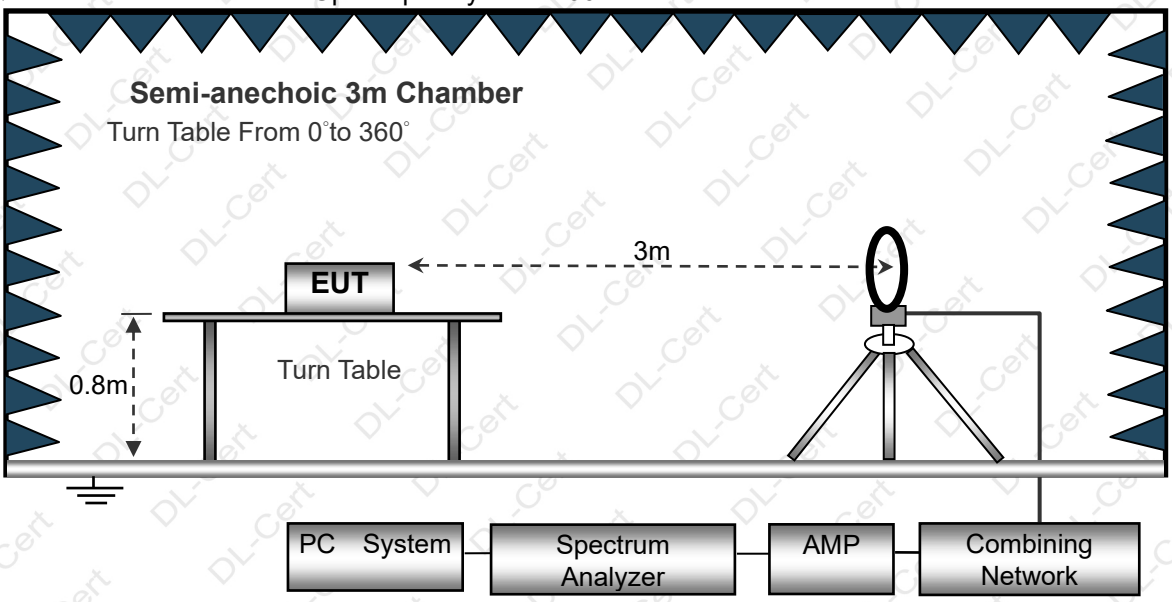

（B）Radiated Emission Test-Up Frequency 30MHz~1GHz

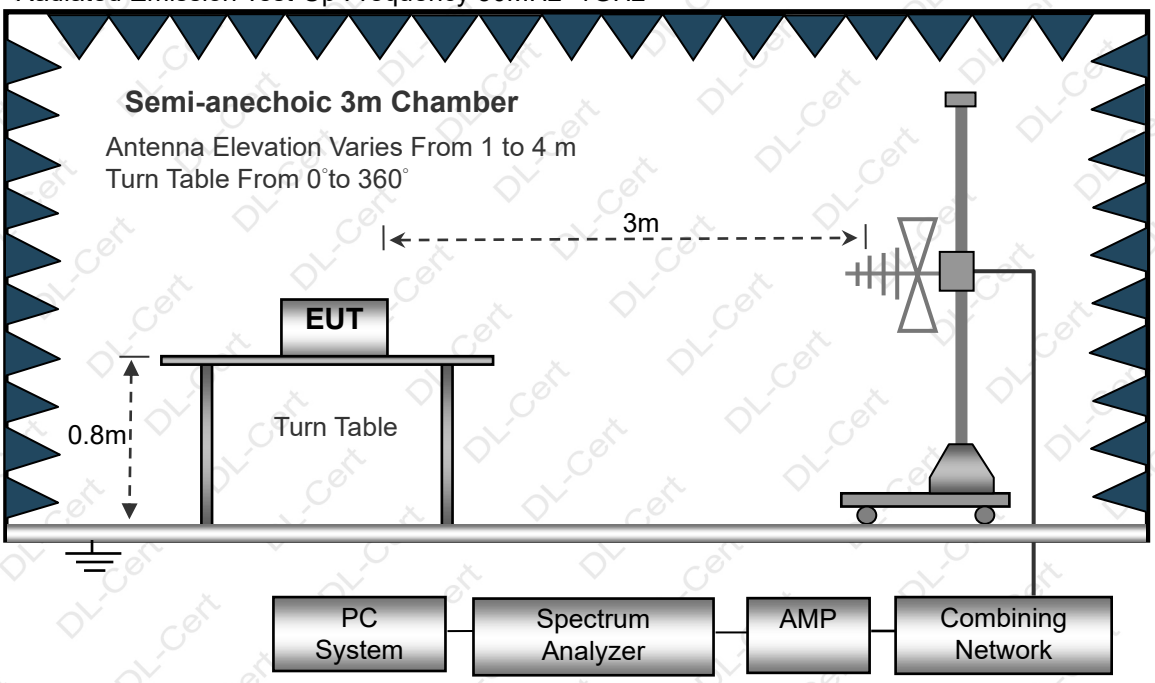

（C）Radiated Emission Test-Up Frequency Above 1GHz

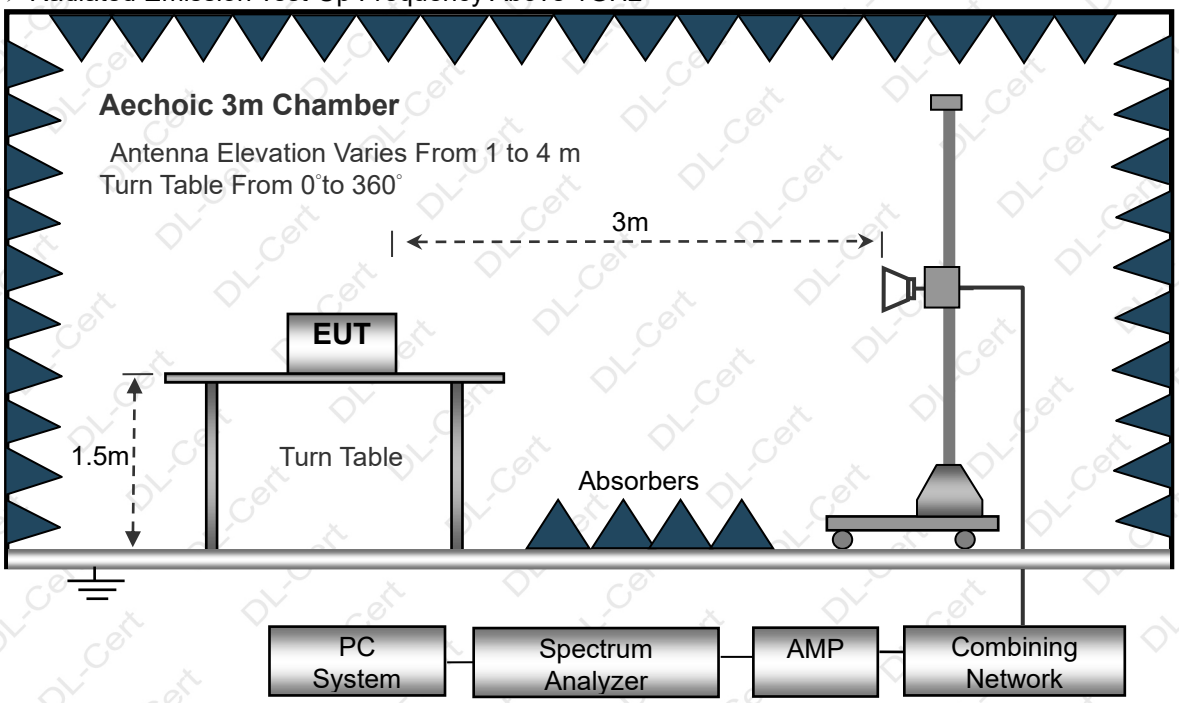

3.2.5 EUT OPERATING CONDITIONS

The EUT tested system was configured as the statements of 2.3 Unless otherwise a special operating condition is specified in the follows during the testing.

3.2.6 TEST RESULTS (BETWEEN 9KHZ – 30 MHZ)

Temperature:	20℃	Relative Humidtity:	48%
Pressure:	1010 hPa	Test Voltage :	DC 3.7V
Test Mode :	Mode 6	Polarization :	--

Freq.	Reading	Limit	Margin	State
(MHz)	(dBuV/m)	(dBuV/m)	(dB)	P/F
--	--	--	--	PASS
--	--	--	--	PASS

NOTE:

The amplitude of spurious emissions which are attenuated by more than 20dB below the permissible value has no need to be reported.
Distance extrapolation factor =40 log (specific distance/test distance)(dB);
Limit line = specific limits(dBuv) + distance extrapolation factor.

3.2.7 TEST RESULTS (BETWEEN 30MHZ – 1GHZ)

Temperature:	26℃	Relative Humidity:	54%
Pressure:	1010 hPa	Polarization :	Horizontal
Test Voltage :	DC 3.7V		
Test Mode :	Mode 6		

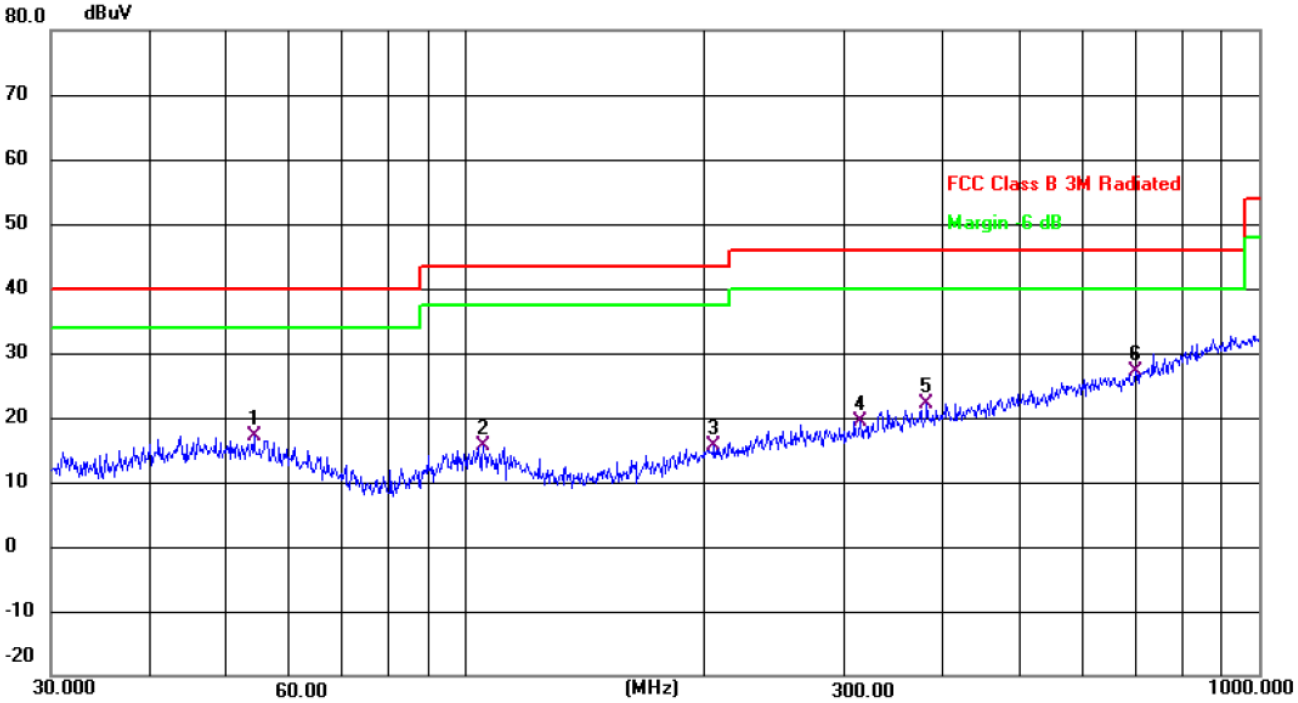

No.	Mk.	Freq.	Reading Level	Correct Factor	Measure-ment	Limit	Margin	
		MHz	dBuV	dB	dBuV	dBuV	dB	Detector
1		54.0711	24.63	-7.57	17.06	40.00	-22.94	QP
2		105.2718	24.48	-8.86	15.62	43.50	-27.88	QP
3		205.6751	24.56	-8.81	15.75	43.50	-27.75	QP
4		314.3765	25.08	-5.77	19.31	46.00	-26.69	QP
5		381.2487	25.94	-3.86	22.08	46.00	-23.92	QP
6	*	699.3046	24.91	2.26	27.17	46.00	-18.83	QP

Remark:
Correct Factor = Cable loss + Antenna factor – Preamplifier;
Level = Reading Level + Correct Factor; Margin = Level - Limit;

Temperature:	26℃	Relative Humidity:	54%
Pressure:	1010 hPa	Polarization :	Vertical
Test Voltage :	DC 3.7V		
Test Mode :	Mode 6		

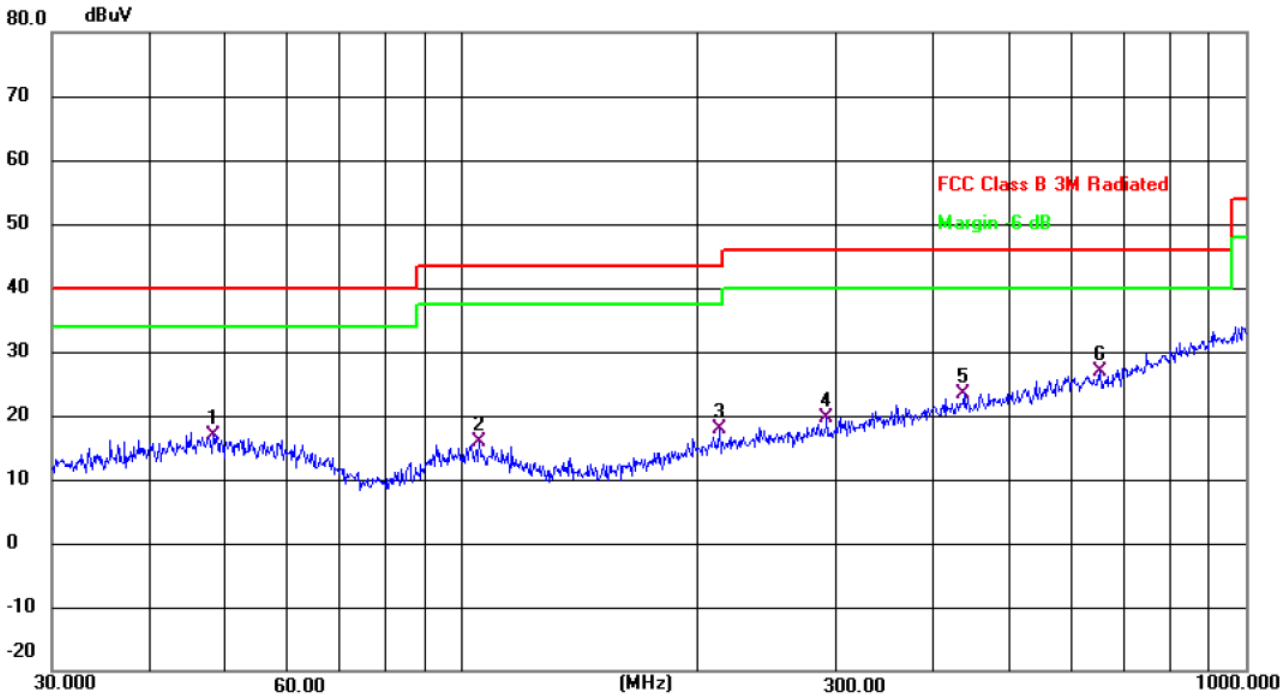

No.	Mk.	Freq.	Reading Level	Correct Factor	Measure-ment	Limit	Margin	
		MHz	dBuV	dB	dBuV	dBuV	dB	Detector
1		48.1626	23.73	-6.95	16.78	40.00	-23.22	QP
2		105.2718	24.63	-8.86	15.77	43.50	-27.73	QP
3		213.0151	26.43	-8.60	17.83	43.50	-25.67	QP
4		292.0583	25.87	-6.36	19.51	46.00	-26.49	QP
5		437.1199	26.33	-2.84	23.49	46.00	-22.51	QP
6	*	651.9417	25.75	1.10	26.85	46.00	-19.15	QP

Remark:

Correct Factor = Cable loss + Antenna factor – Preamplifier;

Level = Reading Level + Correct Factor; Margin = Level - Limit;

3.2.8 TEST RESULTS (1GHZ~25GHZ)

GFSK

Polar (H/V)	Frequency (MHz)	Meter Reading (dBuV)	Pre-amplifier (dB)	Cable Loss (dB)	Antenna Factor (dB/m)	Emission Level (dBuV/m)	Limits (dBuV/m)	Margin (dB)	Detector Type
operation frequency:2402									
V	4804.00	58.64	50.65	6.88	31.29	46.16	74	-27.84	PK
V	4804.00	46.69	50.65	6.88	31.29	34.21	54	-19.79	AV
V	7206.00	49.13	49.98	7.16	36.63	42.94	74	-31.06	PK
V	7206.00	37.61	49.98	7.16	36.63	31.42	54	-22.58	AV
V	16132.00	45.53	51.53	11.34	41.52	46.86	74	-27.14	PK
H	4804.00	53.69	50.65	6.88	31.29	41.21	74	-32.79	PK
H	4804.00	42.94	50.65	6.88	31.29	30.46	54	-23.54	AV
H	7206.00	52.8	49.98	7.16	36.63	46.61	74	-27.39	PK
H	7206.00	41.59	49.98	7.16	36.63	35.4	54	-18.6	AV
H	16132.00	47.13	51.53	11.34	41.52	48.46	74	-25.54	PK
operation frequency:2441									
V	4882.00	57.54	50.67	6.89	31.38	45.14	74	-28.86	PK
V	4882.00	45.69	50.67	6.89	31.38	33.29	54	-20.71	AV
V	7323.00	47.51	50.02	7.24	36.63	41.36	74	-32.64	PK
V	7323.00	36.42	50.02	7.24	36.63	30.27	54	-23.73	AV
V	16132.00	44.81	51.53	11.34	41.52	46.14	74	-27.86	PK
H	4882.00	52.86	50.67	6.89	31.38	40.46	74	-33.54	PK
H	4882.00	47.39	50.67	6.89	31.38	34.99	54	-19.01	AV
H	7323.00	55.76	50.02	7.24	36.63	49.61	74	-24.39	PK
H	7323.00	43.8	50.02	7.24	36.63	37.65	54	-16.35	AV
H	16132.00	45.71	51.53	11.34	41.52	47.04	74	-26.96	PK
operation frequency:2480									
V	4960.00	57.45	50.79	6.83	31.36	44.85	74	-29.15	PK
V	4960.00	45.54	50.79	6.83	31.36	32.94	54	-21.06	AV
V	7440.00	46.8	50.11	7.25	36.58	40.52	74	-33.48	PK
V	7440.00	33.54	50.11	7.25	36.58	27.26	54	-26.74	AV
V	16132.00	44.69	51.53	11.34	41.52	46.02	74	-27.98	PK
H	4960.00	56.13	50.79	6.83	31.36	43.53	74	-30.47	PK
H	4960.00	46.54	50.79	6.83	31.36	33.94	54	-20.06	AV
H	7440.00	53.49	50.11	7.25	36.58	47.21	74	-26.79	PK
H	7440.00	42.71	50.11	7.25	36.58	36.43	54	-17.57	AV
H	16132.00	43.69	51.53	11.34	41.52	45.02	74	-28.98	PK

Remark:

1. Emission Level = Meter Reading + Antenna Factor + Cable Loss – Pre-amplifier,
   Margin= Emission Level - Limit
2. If peak below the average limit, the average emission was no test.
3. The amplitude of spurious emissions which are attenuated by more than 20dB below the permissible value has no need to be reported.

π/4 DQPSK

Polar (H/V)	Frequency (MHz)	Meter Reading (dBuV)	Pre-amplifier (dB)	Cable Loss (dB)	Antenna Factor (dB/m)	Emission Level (dBuV/m)	Limits (dBuV/m)	Margin (dB)	Detector Type
operation frequency:2402									
V	4804.00	56.64	50.65	6.88	31.29	44.16	74	-29.84	PK
V	4804.00	44.66	50.65	6.88	31.29	32.18	54	-21.82	AV
V	7206.00	46.8	49.98	7.16	36.63	40.61	74	-33.39	PK
V	7206.00	35.64	49.98	7.16	36.63	29.45	54	-24.55	AV
V	16132.00	43.69	51.53	11.34	41.52	45.02	74	-28.98	PK
H	4804.00	56.86	50.65	6.88	31.29	44.38	74	-29.62	PK
H	4804.00	47.8	50.65	6.88	31.29	35.32	54	-18.68	AV
H	7206.00	53.74	49.98	7.16	36.63	47.55	74	-26.45	PK
H	7206.00	44.69	49.98	7.16	36.63	38.5	54	-15.5	AV
H	16132.00	43.86	51.53	11.34	41.52	45.19	74	-28.81	PK
operation frequency:2441									
V	4882.00	57.8	50.67	6.89	31.38	55.18	74	-18.82	PK
V	4882.00	46.94	50.67	6.89	31.38	42.93	54	-11.07	AV
V	7323.00	47.69	50.02	7.24	36.63	60.06	74	-13.94	PK
V	7323.00	36.66	50.02	7.24	36.63	40.48	54	-13.52	AV
V	16132.00	42.8	51.53	11.34	41.52	50.22	74	-23.78	PK
H	4882.00	56.64	50.67	6.89	31.38	53.81	74	-20.19	PK
H	4882.00	44.69	50.67	6.89	31.38	43.14	54	-10.86	AV
H	7323.00	54.13	50.02	7.24	36.63	59.11	74	-14.89	PK
H	7323.00	44.51	50.02	7.24	36.63	41.63	54	-12.37	AV
H	16132.00	46.69	51.53	11.34	41.52	50.02	74	-23.98	PK
operation frequency:2480									
V	4960.00	58.8	50.79	6.83	31.36	46.2	74	-27.8	PK
V	4960.00	46.91	50.79	6.83	31.36	34.31	54	-19.69	AV
V	7440.00	49.72	50.11	7.25	36.58	43.44	74	-30.56	PK
V	7440.00	37.49	50.11	7.25	36.58	31.21	54	-22.79	AV
V	16132.00	46.54	51.53	11.34	41.52	47.87	74	-26.13	PK
H	4960.00	57.69	50.79	6.83	31.36	45.09	74	-28.91	PK
H	4960.00	46.86	50.79	6.83	31.36	34.26	54	-19.74	AV
H	7440.00	52.51	50.11	7.25	36.58	46.23	74	-27.77	PK
H	7440.00	43.69	50.11	7.25	36.58	37.41	54	-16.59	AV
H	16132.00	45.13	51.53	11.34	41.52	46.46	74	-27.54	PK

Remark:

1. Emission Level = Meter Reading + Antenna Factor + Cable Loss – Pre-amplifier,
   Margin= Emission Level - Limit
2. If peak below the average limit, the average emission was no test.
3. The amplitude of spurious emissions which are attenuated by more than 20dB below the permissible value has no need to be reported.

8DPSK

Polar (H/V)	Frequency (MHz)	Meter Reading (dBuV)	Pre-amplifier (dB)	Cable Loss (dB)	Antenna Factor (dB/m)	Emission Level (dBuV/m)	Limits (dBuV/m)	Margin (dB)	Detector Type
operation frequency:2402									
V	4804.00	54.74	50.65	6.88	31.29	42.26	74	-31.74	PK
V	4804.00	42.85	50.65	6.88	31.29	30.37	54	-23.63	AV
V	7206.00	41.69	49.98	7.16	36.63	35.5	74	-38.5	PK
V	7206.00	30.81	49.98	7.16	36.63	24.62	54	-29.38	AV
V	16132.00	40.74	51.53	11.34	41.52	42.07	74	-31.93	PK
H	4804.00	51.88	50.65	6.88	31.29	39.4	74	-34.6	PK
H	4804.00	40.07	50.65	6.88	31.29	27.59	54	-26.41	AV
H	7206.00	48.96	49.98	7.16	36.63	42.77	74	-31.23	PK
H	7206.00	37.85	49.98	7.16	36.63	31.66	54	-22.34	AV
H	16132.00	39.96	51.53	11.34	41.52	41.29	74	-32.71	PK
operation frequency:2441									
V	4882.00	52.91	50.67	6.89	31.38	40.51	74	-33.49	PK
V	4882.00	40.74	50.67	6.89	31.38	28.34	54	-25.66	AV
V	7323.00	42.69	50.02	7.24	36.63	36.54	74	-37.46	PK
V	7323.00	31.85	50.02	7.24	36.63	25.7	54	-28.3	AV
V	16132.00	39.17	51.53	11.34	41.52	40.5	74	-33.5	PK
H	4882.00	52.96	50.67	6.89	31.38	40.56	74	-33.44	PK
H	4882.00	40.54	50.67	6.89	31.38	28.14	54	-25.86	AV
H	7323.00	48.81	50.02	7.24	36.63	42.66	74	-31.34	PK
H	7323.00	37.74	50.02	7.24	36.63	31.59	54	-22.41	AV
H	16132.00	38.69	51.53	11.34	41.52	40.02	74	-33.98	PK
operation frequency:2480									
V	4960.00	51.96	50.79	6.83	31.36	39.36	74	-34.64	PK
V	4960.00	39.74	50.79	6.83	31.36	27.14	54	-26.86	AV
V	7440.00	38.76	50.11	7.25	36.58	32.48	74	-41.52	PK
V	7440.00	30.81	50.11	7.25	36.58	24.53	54	-29.47	AV
V	16132.00	41.85	51.53	11.34	41.52	43.18	74	-30.82	PK
H	4960.00	51.69	50.79	6.83	31.36	39.09	74	-34.91	PK
H	4960.00	42.74	50.79	6.83	31.36	30.14	54	-23.86	AV
H	7440.00	47.69	50.11	7.25	36.58	41.41	74	-32.59	PK
H	7440.00	36.81	50.11	7.25	36.58	30.53	54	-23.47	AV
H	16132.00	41.59	51.53	11.34	41.52	42.92	74	-31.08	PK

Remark:

1. Emission Level = Meter Reading + Antenna Factor + Cable Loss – Pre-amplifier,
   Margin= Emission Level - Limit
2. If peak below the average limit, the average emission was no test.
3. The amplitude of spurious emissions which are attenuated by more than 20dB below the permissible value has no need to be reported.

3.3 RADIATED BAND EMISSION MEASUREMENT

3.3.1 TEST REQUIREMENT:

FCC Part15 C Section 15.209 and 15.205

LIMITS OF RADIATED EMISSION MEASUREMENT (Above 1000MHz)

FREQUENCY (MHz)	Limit (dBuV/m) (at 3M)	
	PEAK	AVERAGE
Above 1000	74	54

Notes:

(1) The limit for radiated test was performed according to FCC PART 15C.

(2) The tighter limit applies at the band edges.

(3) Emission level (dBuV/m)=20log Emission level (uV/m).

Spectrum Parameter	Setting
Attenuation	Auto
Start Frequency	2300MHz
Stop Frequency	2520MHz
RB / VB (emission in restricted band)	1 MHz / 1 MHz for Peak, 1 MHz / 10Hz for Average

3.3.2 TEST PROCEDURE

Above 1GHz test procedure as below:

a. 1. The EUT was placed on the top of a rotating table 1.5 meters above the ground at a 3 meter camber. The table was rotated 360 degrees to determine the position of the highest radiation.

b. The EUT was set 3 meters away from the interference-receiving antenna, which was mounted on the top of a variable-height antenna tower.

c. The antenna height is varied from one meter to four meters above the ground to determine the maximum value of the field strength. Both horizontal and vertical polarizations of the antenna are set to make the measurement.

d. For each suspected emission, the EUT was arranged to its worst case and then the antenna was tuned to heights from 1 meter to 4 meters and the rota table was turned from 0 degrees to 360 degrees to find the maximum reading.

e. The test-receiver system was set to Peak Detect Function and Specified Bandwidth with Maximum Hold Mode.

f. If the emission level of the EUT in peak mode was 10dB lower than the limit specified, then testing could be stopped and the peak values of the EUT would be reported. Otherwise the emissions that did not have 10dB margin would be re-tested one by one using peak, quasi-peak or average method as specified and then reported in a data sheet.

g. Test the EUT in the lowest channel,the Highest channel

Note:

The horizontal and vertical polarities of the antenna were tested, and a pre-test was conducted on the EUT placement as three orthogonal axes X,Y,Z. The worst display of the test results was the Y-axis. The worst case emissions were reported.

3.3.3 DEVIATION FROM TEST STANDARD

No deviation

3.3.4 TEST SETUP

Radiated Emission Test-Up Frequency Above 1GHz

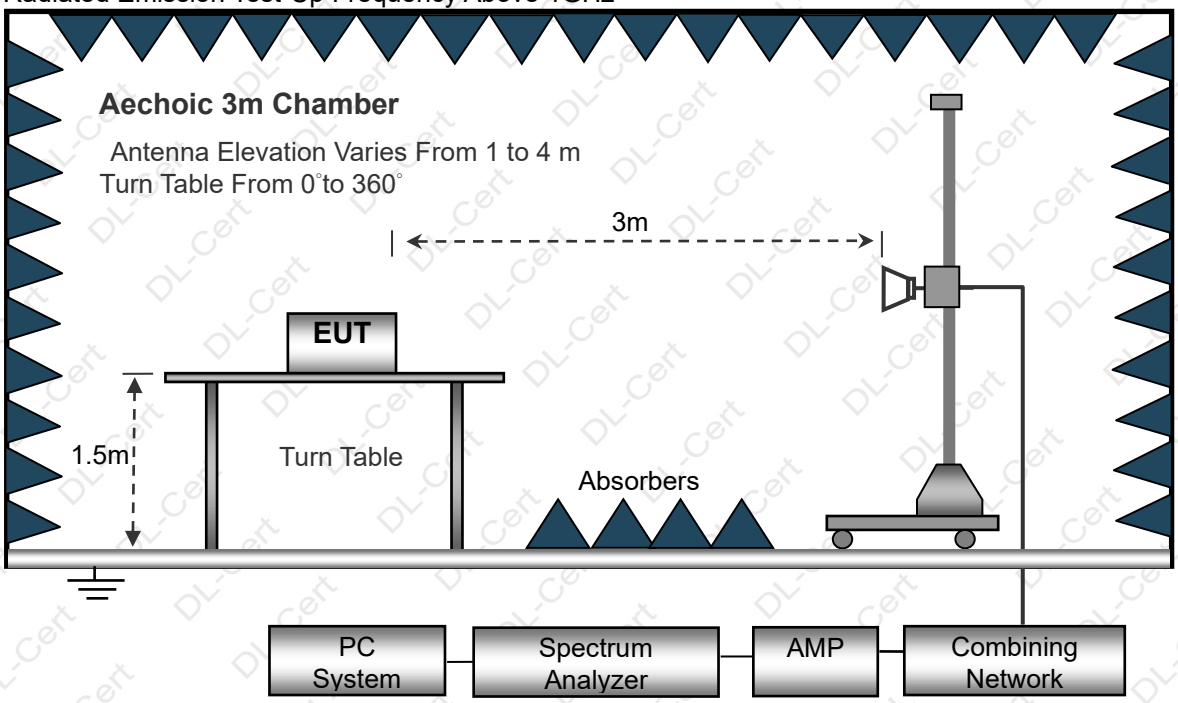

3.3.5 EUT OPERATING CONDITIONS

The EUT tested system was configured as the statements of 2.3 Unless otherwise a special operating condition is specified in the follows during the testing.

3.3.6 TEST RESULT

GFSK

Polar (H/V)	Frequency (MHz)	Meter Reading (dBuV)	Pre-amplifier (dB)	Cable Loss (dB)	Antenna Factor (dB/m)	Emission Level (dBuV/m)	Limits (dBuV/m)	Margin (dB)	Detector Type
operation frequency:2402									
V	2390.00	64.02	52.12	2.73	27.38	42.01	74	-31.99	PK
V	2390.00	52.64	52.12	2.73	27.38	30.63	54	-23.37	AV
V	2400.00	62.49	52.16	2.78	27.41	40.52	74	-33.48	PK
V	2400.00	50.74	52.16	2.78	27.41	28.77	54	-25.23	AV
H	2390.00	64.69	52.12	2.73	27.38	42.68	74	-31.32	PK
H	2390.00	53.57	52.12	2.73	27.38	31.56	54	-22.44	AV
H	2400.00	63.8	52.16	2.78	27.41	41.83	74	-32.17	PK
H	2400.00	52.97	52.16	2.78	27.41	31	54	-23	AV

Polar (H/V)	Frequency (MHz)	Meter Reading (dBuV)	Pre-amplifier (dB)	Cable Loss (dB)	Antenna Factor (dB/m)	Emission Level (dBuV/m)	Limits (dBuV/m)	Margin (dB)	Detector Type
operation frequency:2480									
V	2483.50	64.49	52.23	2.86	27.44	42.56	74	-31.44	PK
V	2483.50	53.64	52.23	2.86	27.44	31.71	54	-22.29	AV
V	2500.00	64.13	52.26	2.88	27.49	42.24	74	-31.76	PK
V	2500.00	52.91	52.26	2.88	27.49	31.02	54	-22.98	AV
H	2483.50	63.52	52.23	2.86	27.44	41.59	74	-32.41	PK
H	2483.50	53.76	52.23	2.86	27.44	31.83	54	-22.17	AV
H	2500.00	62.84	52.26	2.88	27.49	40.95	74	-33.05	PK
H	2500.00	51.69	52.26	2.88	27.49	29.8	54	-24.2	AV

Remark:

1. Emission Level = Meter Reading + Factor, Margin= Emission Level - Limit
2. If peak below the average limit, the average emission was no test.
3. The amplitude of spurious emissions which are attenuated by more than 20dB below the permissible value has no need to be reported.

π/4 DQPSK

Polar (H/V)	Frequency (MHz)	Meter Reading (dBuV)	Pre-amplifier (dB)	Cable Loss (dB)	Antenna Factor (dB/m)	Emission Level (dBuV/m)	Limits (dBuV/m)	Margin (dB)	Detector Type
operation frequency:2402									
V	2390.00	63.51	52.12	2.73	27.38	41.5	74	-32.5	PK
V	2390.00	53.13	52.12	2.73	27.38	31.12	54	-22.88	AV
V	2400.00	64.97	52.16	2.78	27.41	43	74	-31	PK
V	2400.00	54.69	52.16	2.78	27.41	32.72	54	-21.28	AV
H	2390.00	64.51	52.12	2.73	27.38	42.5	74	-31.5	PK
H	2390.00	53.49	52.12	2.73	27.38	31.48	54	-22.52	AV
H	2400.00	63.84	52.16	2.78	27.41	41.87	74	-32.13	PK
H	2400.00	51.69	52.16	2.78	27.41	29.72	54	-24.28	AV

Polar (H/V)	Frequency (MHz)	Meter Reading (dBuV)	Pre-amplifier (dB)	Cable Loss (dB)	Antenna Factor (dB/m)	Emission Level (dBuV/m)	Limits (dBuV/m)	Margin (dB)	Detector Type
operation frequency:2480									
V	2483.50	64.54	52.23	2.86	27.44	42.61	74	-31.39	PK
V	2483.50	54.02	52.23	2.86	27.44	32.09	54	-21.91	AV
V	2500.00	62.67	52.26	2.88	27.49	40.78	74	-33.22	PK
V	2500.00	51.8	52.26	2.88	27.49	29.91	54	-24.09	AV
H	2483.50	62.74	52.23	2.86	27.44	40.81	74	-33.19	PK
H	2483.50	51.69	52.23	2.86	27.44	29.76	54	-24.24	AV
H	2500.00	65.06	52.26	2.88	27.49	43.17	74	-30.83	PK
H	2500.00	54.49	52.26	2.88	27.49	32.6	54	-21.4	AV

Remark:

1. Emission Level = Meter Reading + Factor, Margin= Emission Level - Limit
2. If peak below the average limit, the average emission was no test.
3. The amplitude of spurious emissions which are attenuated by more than 20dB below the permissible value has no need to be reported.

8DPSK

Polar (H/V)	Frequency (MHz)	Meter Reading (dBuV)	Pre-amplifier (dB)	Cable Loss (dB)	Antenna Factor (dB/m)	Emission Level (dBuV/m)	Limits (dBuV/m)	Margin (dB)	Detector Type
operation frequency:2402									
V	2390.00	64.26	52.12	2.73	27.38	42.25	74	-31.75	PK
V	2390.00	53.85	52.12	2.73	27.38	31.84	54	-22.16	AV
V	2400.00	63.32	52.16	2.78	27.41	41.35	74	-32.65	PK
V	2400.00	52.85	52.16	2.78	27.41	30.88	54	-23.12	AV
H	2390.00	62.73	52.12	2.73	27.38	40.72	74	-33.28	PK
H	2390.00	51.48	52.12	2.73	27.38	29.47	54	-24.53	AV
H	2400.00	64.41	52.16	2.78	27.41	42.44	74	-31.56	PK
H	2400.00	53.46	52.16	2.78	27.41	31.49	54	-22.51	AV

Polar (H/V)	Frequency (MHz)	Meter Reading (dBuV)	Pre-amplifier (dB)	Cable Loss (dB)	Antenna Factor (dB/m)	Emission Level (dBuV/m)	Limits (dBuV/m)	Margin (dB)	Detector Type
operation frequency:2480									
V	2483.50	63.25	52.23	2.86	27.44	41.32	74	-32.68	PK
V	2483.50	52.63	52.23	2.86	27.44	30.7	54	-23.3	AV
V	2500.00	62.14	52.26	2.88	27.49	40.25	74	-33.75	PK
V	2500.00	51.36	52.26	2.88	27.49	29.47	54	-24.53	AV
H	2483.50	61.52	52.23	2.86	27.44	39.59	74	-34.41	PK
H	2483.50	50.63	52.23	2.86	27.44	28.7	54	-25.3	AV
H	2500.00	62.85	52.26	2.88	27.49	40.96	74	-33.04	PK
H	2500.00	52.23	52.26	2.88	27.49	30.34	54	-23.66	AV

Remark:

1. Emission Level = Meter Reading + Factor, Margin= Emission Level - Limit
2. If peak below the average limit, the average emission was no test.
3. The amplitude of spurious emissions which are attenuated by more than 20dB below the permissible value has no need to be reported.

3.4 CONDUCTED BAND EDGE EMISSION&CONDUCTED SPURIOUS EMISSIONS MEASUREMENT

Test Requirement:	FCC Part15 C Section 15.247 (d)
Test Method:	KDB558074 D0115.247 Meas Guidance v05r02

3.4.1 APPLICABLE STANDARD

in any 100 kHz bandwidth outside the frequency bands in which the spread spectrum intentional radiator in operating, the radio frequency power that is produced by the intentional radiator shall be at least 20dB below that in the 100kHz bandwidth within the band that contains the highest level of the desired power, In addition, radiated emissions which fall in the restricted bands, as defined in§15.205(a), must also comply with the radiated emission limits specified in15.209(a).
If the transmitter complies with the conducted power limits based on the use of RMS averaging over a time interval, as permitted under paragraph (b)(3) of this section, the attenuation required under this paragraph shall be 30 dB instead of 20 dB.

3.4.2 TEST PROCEDURE

Using the following spectrum analyzer setting:
Set the RBW = 100KHz.
Set the VBW = 300KHz.
Sweep time = auto couple.
Detector function = peak.
Trace mode = max hold.
Allow trace to fully stabilize.

3.4.3 DEVIATION FROM STANDARD

No deviation.

3.4.4 TEST SETUP

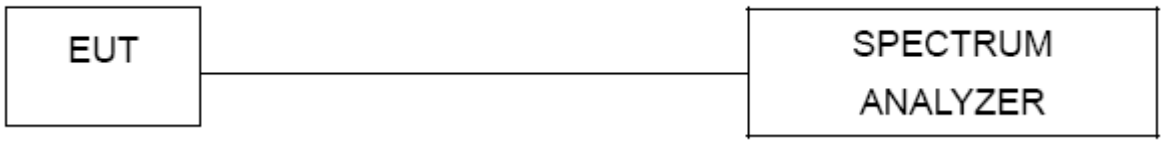

3.4.5 EUT OPERATION CONDITIONS

The EUT tested system was configured as the statements of 2.4 Unless otherwise a special operating condition is specified in the follows during the testing.

3.4.6 TEST RESULTS

Please see annex.

4. PEAK OUTPUT POWER

4.1 APPLIED PROCEDURES / LIMIT

FCC Part15 (15.247) , Subpart C				
Section	Test Item	Limit	Frequency Range (MHz)	Result
15.247 (b)(i)	Peak Output Power	21dBm	2400-2483.5	PASS

4.1.1 TEST PROCEDURE

a. The EUT was directly connected to the power meter and antenna output port as show in the block diagram below,

b. Spectrum Setting : RBW > 20 dB bandwidth of the emission being measured.

Span = approximately 5 times the 20 dB bandwidth, centered on a hopping channel

VBW ≥ RBW

Sweep = auto

Detector function = peak

Trace = max hold

4.1.2 DEVIATION FROM STANDARD

No deviation.

4.1.3 TEST SETUP

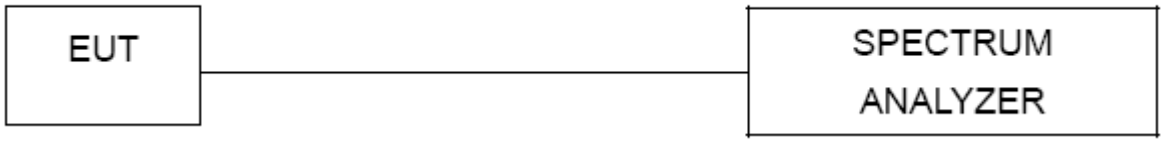

4.1.4 EUT OPERATION CONDITIONS

The EUT tested system was configured as the statements of 2.4 Unless otherwise a special operating condition is specified in the follows during the testing.

4.1.5 TEST RESULTS

Temperature:	25 ℃	Relative Humidity:	60%
Pressure:	1012 hPa	Test Mode :	/

Please see annex.

5. NUMBER OF HOPPING CHANNEL

5.1 APPLIED PROCEDURES / LIMIT

FCC Part15 (15.247) , Subpart C				
Section	Test Item	Limit	Frequency Range (MHz)	Result
15.247 (a)(1)(iii)	Number of Hopping Channel	≥15	2400-2483.5	PASS

Spectrum Parameters	Setting
Attenuation	Auto
Span Frequency	= the frequency band of operation
RB	RBW= 300KHz
VB	VBW ≥ RBW
Detector	Peak
Trace	Max Hold
Sweep Time	Auto

5.1.1 TEST PROCEDURE

a. The EUT was directly connected to the spectrum analyzer and antenna output port as show in the block diagram below,
b. Spectrum Setting : RBW= 300KHz, VBW ≥ RBW, Sweep time = Auto.

5.1.2 DEVIATION FROM STANDARD

No deviation.

5.1.3 TEST SETUP

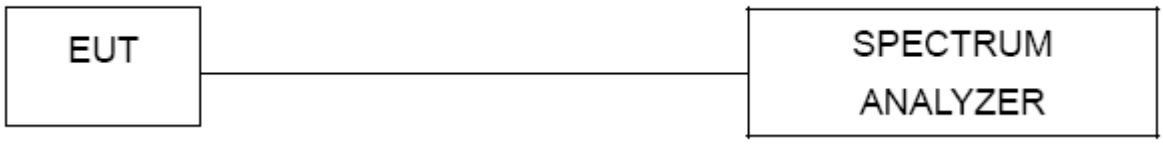

5.1.4 EUT OPERATION CONDITIONS

The EUT tested system was configured as the statements of 2.4 Unless otherwise a special operating condition is specified in the follows during the testing.

5.1.5 TEST RESULTS

Please see annex.

6. BANDWIDTH TEST

6.1 APPLIED PROCEDURES / LIMIT

FCC Part15 (15.247) , Subpart C	
Section	Test Item
15.247(a)(2)	Bandwidth

6.1.1 TEST PROCEDURE

1. Set RBW = 30 kHz.
2. Set the video bandwidth (VBW) ≥RBW.
3. Detector = Peak.
4. Trace mode = max hold.
5. Sweep = auto couple.
6. Allow the trace to stabilize.
7. Measure the maximum width of the emission that is constrained by the frequencies associated with the two outermost amplitude points (upper and lower frequencies) that are attenuated by 20 dB relative to the maximum level measured in the fundamental emission.

6.1.2 DEVIATION FROM STANDARD

No deviation.

6.1.3 TEST SETUP

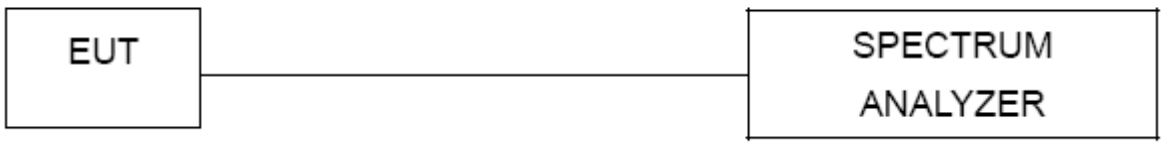

6.1.4 EUT OPERATION CONDITIONS

The EUT tested system was configured as the statements of 2.3 Unless otherwise a special operating condition is specified in the follows during the testing.

6.1.5 TEST RESULTS

Please see annex.

7. HOPPING CHANNEL SEPARATION MEASUREMENT

7.1 APPLIED PROCEDURES / LIMIT

Frequency hopping systems operating in the 2400-2483.5 MHz band may have hopping channel carrier frequencies that are separated by 25 kHz or two-thirds of the 20 dB bandwidth of the hopping channel, whichever is greater.

Spectrum Parameter	Setting
Attenuation	Auto
Span Frequency	> Measurement Bandwidth or Channel Separation
RB	300 kHz (Channel Separation)
VB	300 kHz (Channel Separation)
Detector	Peak
Trace	Max Hold
Sweep Time	Auto

7.1.1 TEST PROCEDURE

a. The transmitter output (antenna port) was connected to the spectrum analyser in peak hold mode.
b. The resolution bandwidth of 300 kHz and the video bandwidth of 300 kHz were utilised for channel separation measurement.

7.1.2 DEVIATION FROM STANDARD

No deviation.

7.1.3 TEST SETUP

Spectrum Analayzer EUT

7.1.4 EUT OPERATION CONDITIONS

The EUT was programmed to be in continuously transmitting mode.

7.1.5 TEST RESULTS

Please see annex.

8. DWELL TIME OF OCCUPANCY

8.1 APPLIED PROCEDURES / LIMIT

FCC Part15 (15.247) , Subpart C				
Section	Test Item	Limit	Frequency Range (MHz)	Result
15.247 (a)(1)(iii)	Average Time of Occupancy	0.4sec	2400-2483.5	PASS

8.1.1 TEST PROCEDURE

a. The transmitter output (antenna port) was connected to the spectrum analyzer
b. Set RBW of spectrum analyzer to 1MHz and VBW to 3MHz.
c. Use a video trigger with the trigger level set to enable triggering only on full pulses.
d. Sweep Time is more than once pulse time.
e. Set the center frequency on any frequency would be measure and set the frequency span to zero span.
f. Measure the maximum time duration of one single pulse.
g. Set the EUT for DH5, DH3 and DH1 packet transmitting.
h. Measure the maximum time duration of one single pulse.
i. A Period Time = (channel number)*0.4
DH1 Time Slot: Reading * (1600/2)*31.6/(channel number)
DH3 Time Slot: Reading * (1600/4)*31.6/(channel number)
DH5 Time Slot: Reading * (1600/6)*31.6/(channel number)

8.1.2 DEVIATION FROM STANDARD

No deviation.

8.1.3 TEST SETUP

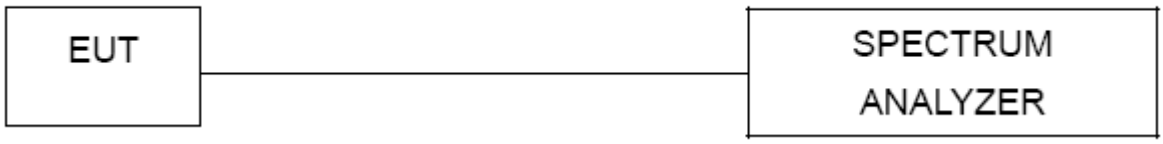

8.1.4 EUT OPERATION CONDITIONS

The EUT tested system was configured as the statements of 2.4 Unless otherwise a special operating condition is specified in the follows during the testing.

8.1.5 TEST RESULTS

Please see annex.

9. ANTENNA REQUIREMENT

9.1 STANDARD REQUIREMENT

15.203 requirement: For intentional device, according to 15.203: an intentional radiator shall be designed to ensure that no antenna other than that furnished by the responsible party shall be used with the device.

9.2 EUT ANTENNA

The EUT antenna is Internal antenna,. It comply with the standard requirement.

10. TEST SETUP PHOTO

Reference to the appendix I for details.

11. EUT PHOTO

Reference to the appendix II for details.

※※※※※ **END OF REPORT** ※※※※※