SOVOL

SOVOL M1D

Quick Start Guide

V1.0 2026.08.11

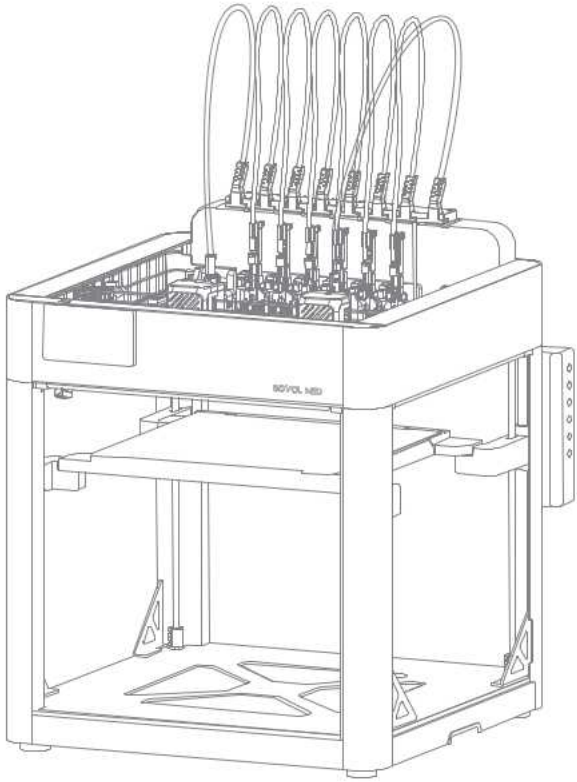

Please read this guide carefully before using this product.

Safety Tips: 1. Do not turn on the power until the printer is fully installed.
2. Please have at least two people to move the printer.

This manual and its contents are intended solely for the operation and use of this product and must not be used for any other purpose.This manual is provided for guidance only and may differ from the actual product; please refer to the actual product as the final authority. Due to product version updates or other requirements,our company may update this manual.You can obtain the latest user manual on our official website or contact us to receive a copy.

Subject to applicable laws and regulations,the Company reserves the right to the final interpretation of this document and all related documentation for this product.

Other trademarks mentioned in this manual are the property of their respective owners.

Searching for keywords

You can use the Find feature to search for keywords in PDF documents. For example, in Adobe Reader, Windows users can use the shortcut **Ctrl+F**, and Mac users can use **Command+F** to search for keywords.

Navigating to a Topic

View a complete list of topics in the table of contents.Click on a topic to navigate to that section.

Printing this document

This document supports high-quality printing.

Reading Tips

Foreword

The purpose of this section is to ensure that users can operate this product correctly by following the instructions in this manual, thereby avoiding hazards or property damage during operation. Before using this product, please read this manual carefully and keep it in a safe place for future reference.

This manual is intended for 3D printers (here in after referred to as “the device”) and provides instructions on how to use the device.

Legend

The symbols used in this document are explained as follows.

Symbol	Instructions
	Supplementary information: additions and explanations to the main text.
	Operating and usage tips, as well as techniques and suggestions for improving installation efficiency and print quality.
	Precautions: Warnings to help you avoid problems during installation and use.
⚠	Warning: Indicates a potential risk of injury.
?	Troubleshooting Tips.

Safety Precautions

⚠Warning: Indicates a risk of serious injury or death.

- To avoid personal injury or property damage,do not use the printer in any manner not described in this manual.
- Do not place the printer in an environment with severe vibrations or other sources of instability, as shaking the printer can affect print quality.
- Do not place the printer near flammable or explosive materials or heat sources.
- Please place the printer in a well-ventilated, cool, and dust-free environment.
- Do not use any power cord other than the one provided; use a three-phase, grounded outlet.
- Do not wear cotton gloves when operating the printer. This type of fabric may become entangled in the printer’s moving parts,resulting in burns,personal injury,or damage to the printer.
- Once printing is complete, please wait a moment before removing the printout.
- We do not recommend using third-party firmware,motherboards,or similar components, as doing so will void the warranty.
- Please clean the printer regularly.Before cleaning,be sure to unplug the printer;use a dry cloth to wipe away dust,adhered printed plastic,or other substances from the frame, guide rails,or rollers.Use glass cleaner or isopropyl alcohol to clean the printer’s surface.
- Children under the age of 10 should not use the printer unsupervised.
- Do not move the nozzle or the print mechanism with your hands while printing.

Contents

Reading Tips 1
Foreword 1
Legend 1
Safety Precautions 1
1 Product Overview 4
Component Overview 4
2 List 10
Package Contents 10
Accessory Box 11
Screw Pack 12
3 Product Unboxing 13
Remove packaging 13
4 Product Assembly 16
Base Assembly 16
Heated Bed Assembly 18
Top Frame Assembly 19
AB-Axis Assembly 19
Reinforcing rib 21
Tool Head 22
Wire Harness Clamp 23
Waste Tray 23
AFS Components 24
Fixed Material Rack 24
External Material Rack 25
Teflon Tube Connections 27
5 Wire Harness Connections 28
Introduction to Wiring Harnesses 28
6 First-Time Use 30
Printer Placement 30
Check the power-on status 31
Initial Calibration 31
Language,Region,and Network Settings 31
Power-on self-test 31
Machine Calibration 32

Edit filament 32
Loading the filament 33
Install OrcaSlicer 35
Download and Install 35
Select Printer Model and Filament 36
Import Models and Slice 37
OrcaSlicer Print Mode 37
Single-Nozzle Printing 37
Mirror Mode Printing 38
Copy Mode printing 39
Multi-nozzle printing 39
Slicing and Exporting 40
Select the slicing method 40
Export G code files 41
Start printing from the printer screen 41
Removing the Model 44
Waste Disposal 44
7 Slice Installation and Usage Guide 46
Print Interface 46
Toolhead Editing 46
Wi-Fi 47
Help 47
Fan Control 47
LED Light Control 48
Heated Bed Temperature Control 48
Chassis Temperature Control 48
Print Speed 49
XYZ-Axis Movement 49
Loading/Unloading Filament 50
Memory Management 50
Machine Information 50
Calibration 51
Settings 51
OTA Online Upgrade 51
8 Appendix 52
Parameters 52
Attachment 54
FCC Statement 54

Printer

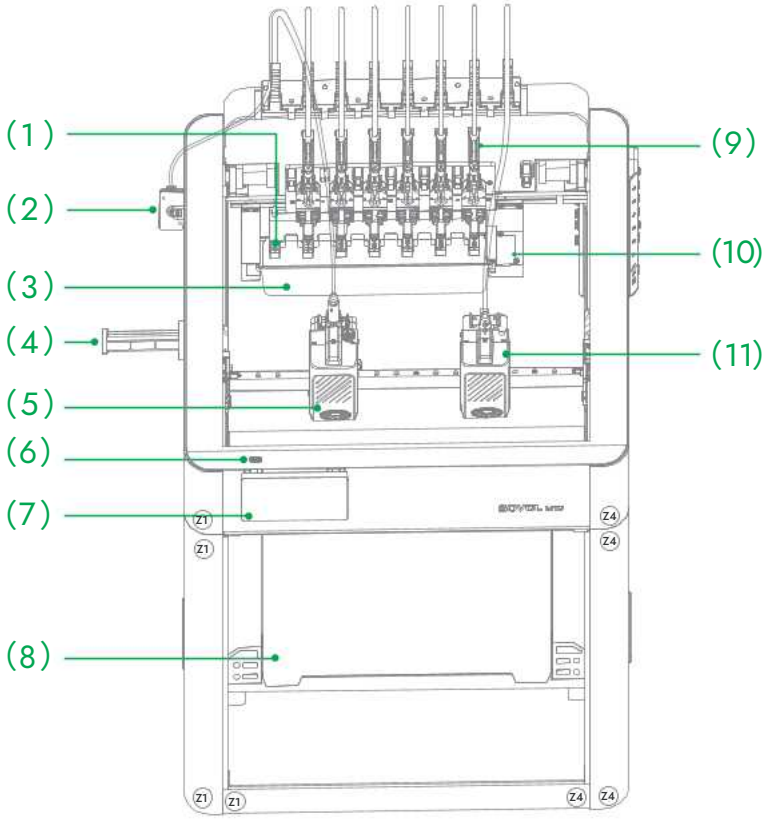

(1)	Silicone Plug
(2)	Filament Sensor
(3)	Waste Tray
(4)	Fixed Material Rack
(5)	Left print head
(6)	USB port
(7)	Screen
(8)	Heated Bed
(9)	Tool head
(10)	Nozzle Camera
(11)	Right print head

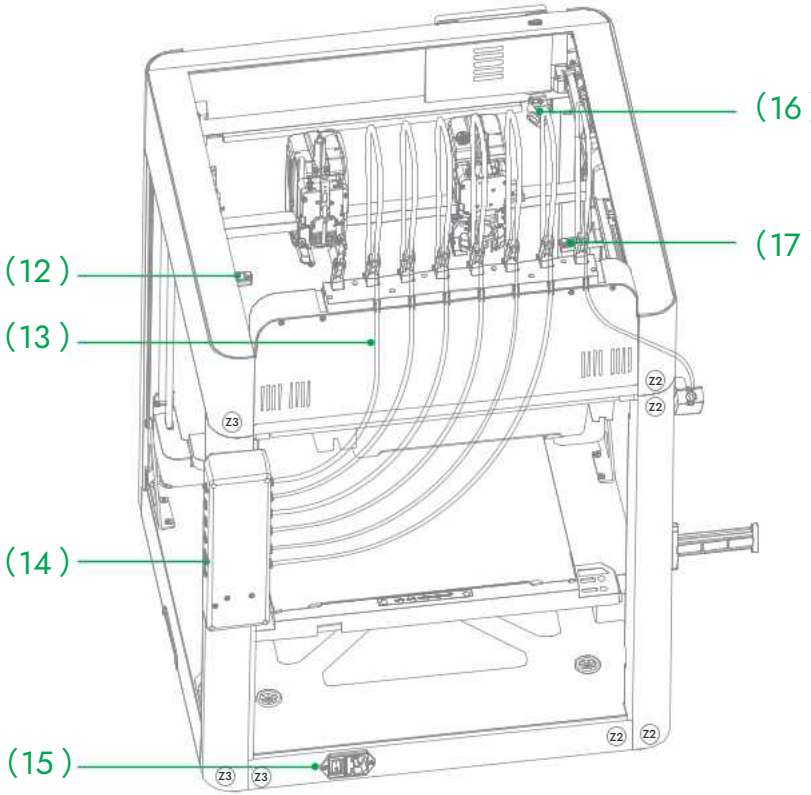

(12)	Right-Silicone Plug
(13)	Teflon tubes Fitting
(14)	AFS
(15)	Power Outlet
(16)	Live Camera
(17)	Left-Silicone Plug

Left print head

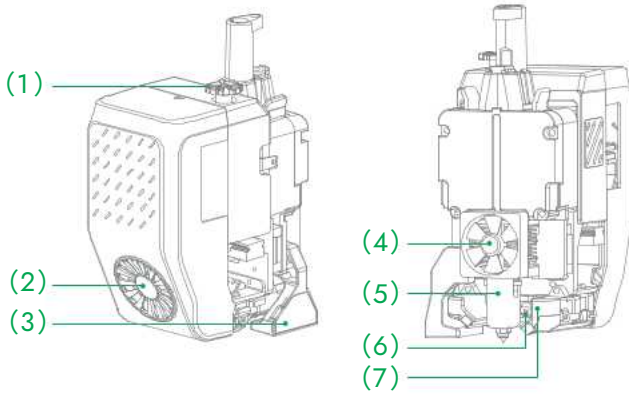

(1)	Extruder Motor Knob
(2)	Component Cooling Fan
(3)	Eddy Current Testing Module
(4)	Hot-end Cooling Fan
(5)	Hot End
(6)	Print Head Camera
(7)	Component Cooling Fan Air Duct

Right print head

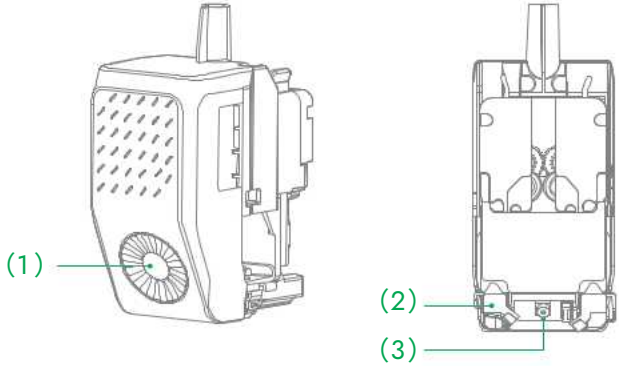

(1)	Component Cooling Fan
(2)	Component Cooling Fan Air Duct
(3)	Tool Head Camera

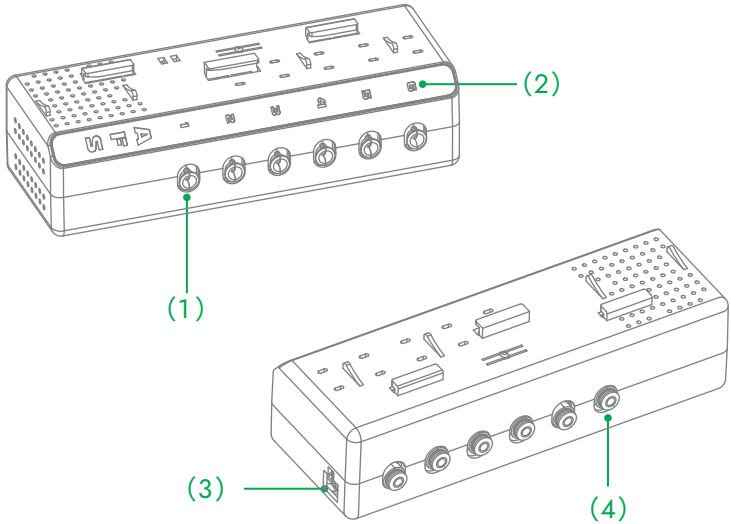

(1)	Feeding Port
(2)	Status Light
(3)	Discharge port
(4)	Communication Interfaces

External Material Rack

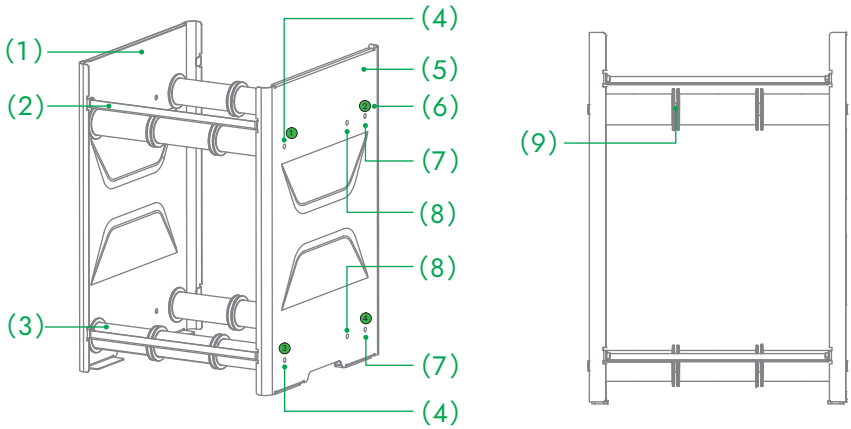

(1)	Left-Side Body Panel
(2)	Consumables Rack Mounting Plate
(3)	Consumable Drum
(4)	1KG Filament Mounting Holes
(5)	Right-Side Body Panel
(6)	Consumables Installation Instructions Sticker
(7)	1KG Filament Mounting Holes
(8)	200G Filament Mounting Holes
(9)	Rolling Barrier Posts

Package Contents

Before use, please ensure that the following items are included in the device's packaging.
If any items are missing, please contact your dealer or customer service.

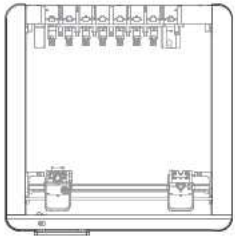

AB-Axis Assembly × 1

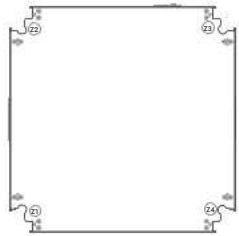

Base Assembly ×1

Heated Bed Assembly ×1

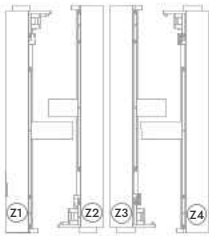

Z-axis assembly × 1

AFS × 1

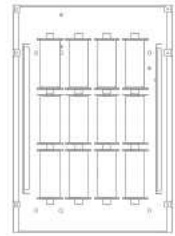

External Material Rack × 1

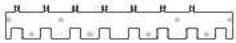

Cable Clamp × 1

Waste Tray ×1

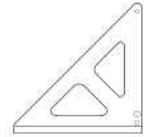

Reinforcing rib × 4

Important Notes

- The images shown in this manual are for illustrative purposes only. They may differ from the actual product; please refer to the actual product.

Accessory Box

Power cord ×1

Diagonal pliers ×1

Scraper knife ×1

Socket wrench ×1
Tweezers ×1

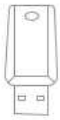

USB Flash Drive ×1

Toolkits ×1

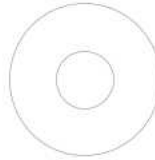

Filament(200g) ×2

Silicone Plug ×8

Nozzle cleaner
Zip Tie

H4.0 Screwdriver ×1

Grease ×1

Solid adhesive ×1

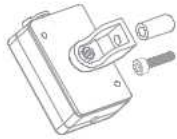

Filament Sensor ×1

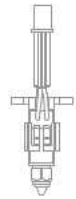

Nozzle kits ×1

Nozzle
Cleaning Brush ×1

Screw Pack

1.

x16

M5 x 35 Hex socket head cap screws, used for installing Base Assembly

2.

x8

M4 x 12 Hex socket head cap screws,used for installing Heated Bed Assembly

3.

x8

M5 x 12 Hex socket head cap screws, used for installing AB-axis assembly

4. +

x8 x8

M5 x 15 and M3 x 6 flat-head hex socket screws, used for installing Reinforcing rib

5.

x4

M3 x 14 Hex socket head cap screws, used for installing Wire Harness Clamp

6.

x2

M3 x 8 Hex socket head cap screws, used for installing Fixed Material Rack

7. +

x4 x8

M3 x 8 Hex socket round-head screws and M5 x 10 hex socket flat-head screws are used for mounting External Material Rack

Remove packaging

After moving the box to a stable location, open the packaging and remove the foam padding from the first layer.

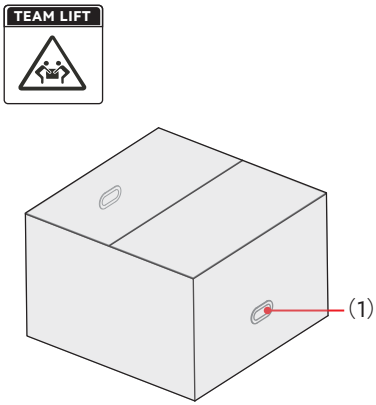

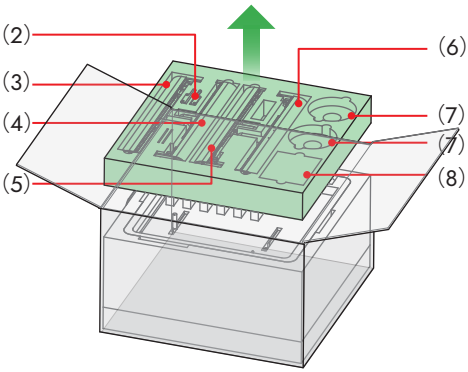

(1)	Packaging Handle Location
(2)	Reinforcing rib
(3)	Z-Axis Assembly-3
(4)	Z-Axis Assembly-1
(5)	Z-Axis Assembly-4
(6)	Z-Axis Assembly-2
(7)	Filament
(8)	Accessory Box

⚠ Warning

If you need to move the M1D, please have at least two people carry it together.

Important Notes

We recommend keeping all packaging materials and screws. If you need to ship the printer, the original packaging will help minimize damage during transit.

Remove packaging 2

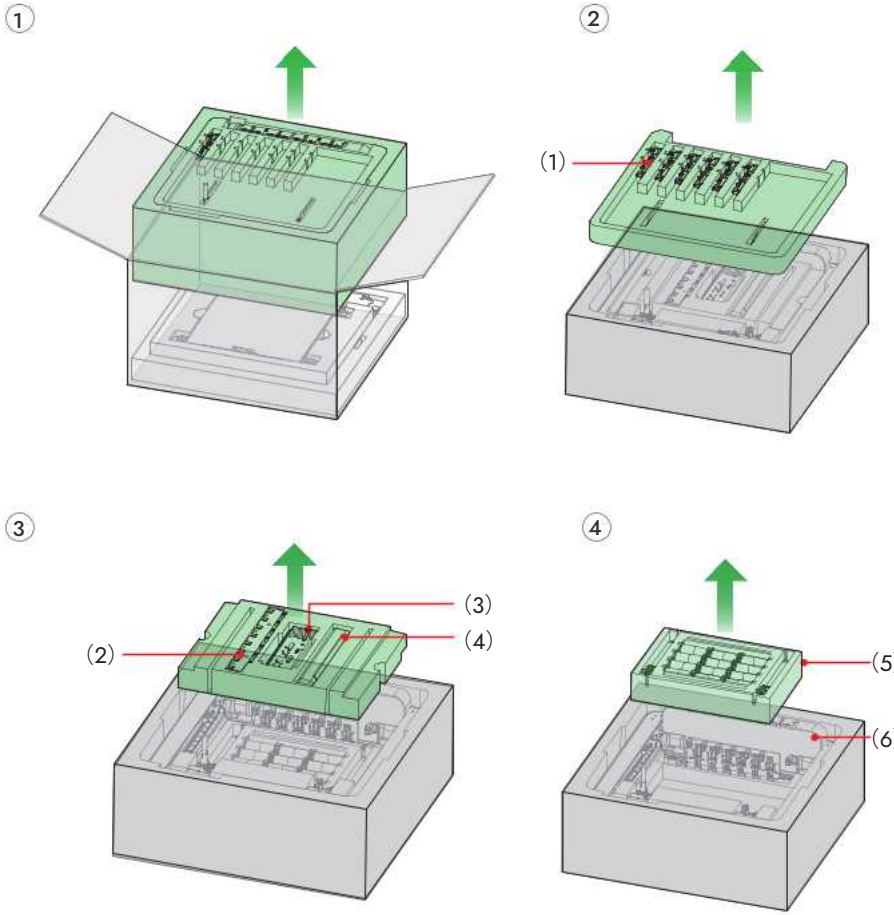

(1)	Tool Head
(2)	Cable Clamp
(3)	AFS
(4)	Waste Tray
(5)	External Material Rack
(6)	AB-Axis

Important Notes

We recommend leaving the **(6) AB-axis** in the foam for the time being. If you need to remove the AB-axis , be careful not to bump into components such as the camera.

Remove packaging 3

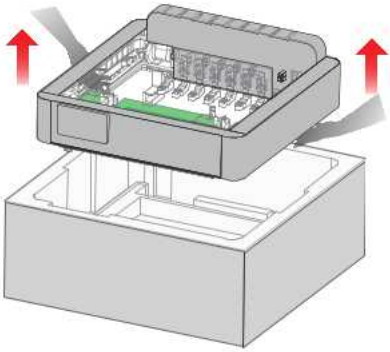

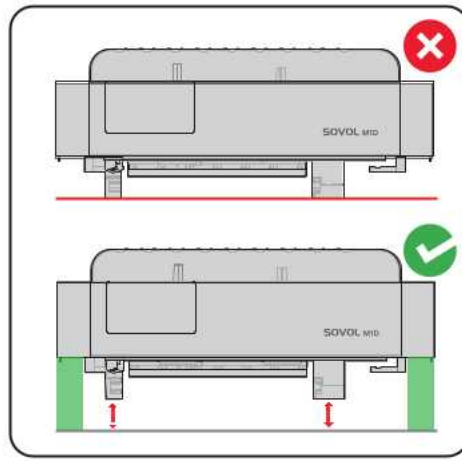

Important Notes

- Do not place the AB-axis assembly on the desk, as this may damage the components.
- Please elevate the AB-axis assembly using supports or place it in a stable position that is supported (or suspended).

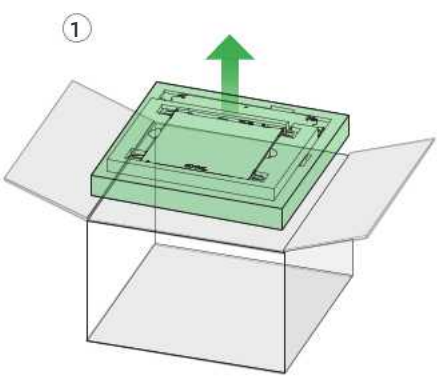

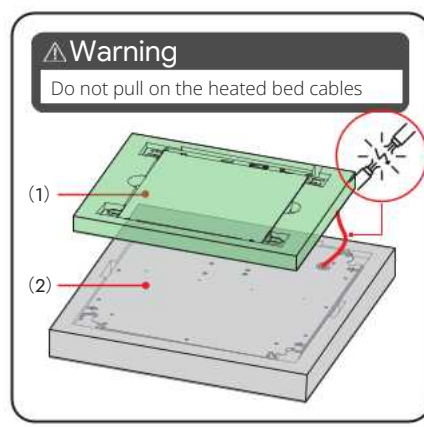

(1)	Heated Bed (*Do not pull on the heated bed cables)
(2)	Base Assembly (*Do not place the heated bed on the base.)

Important Notes

The base assembly is quite heavy; please ensure that at least two people work together to move it.

Base Assembly

1. Attach the Z-axis assembly to the base.

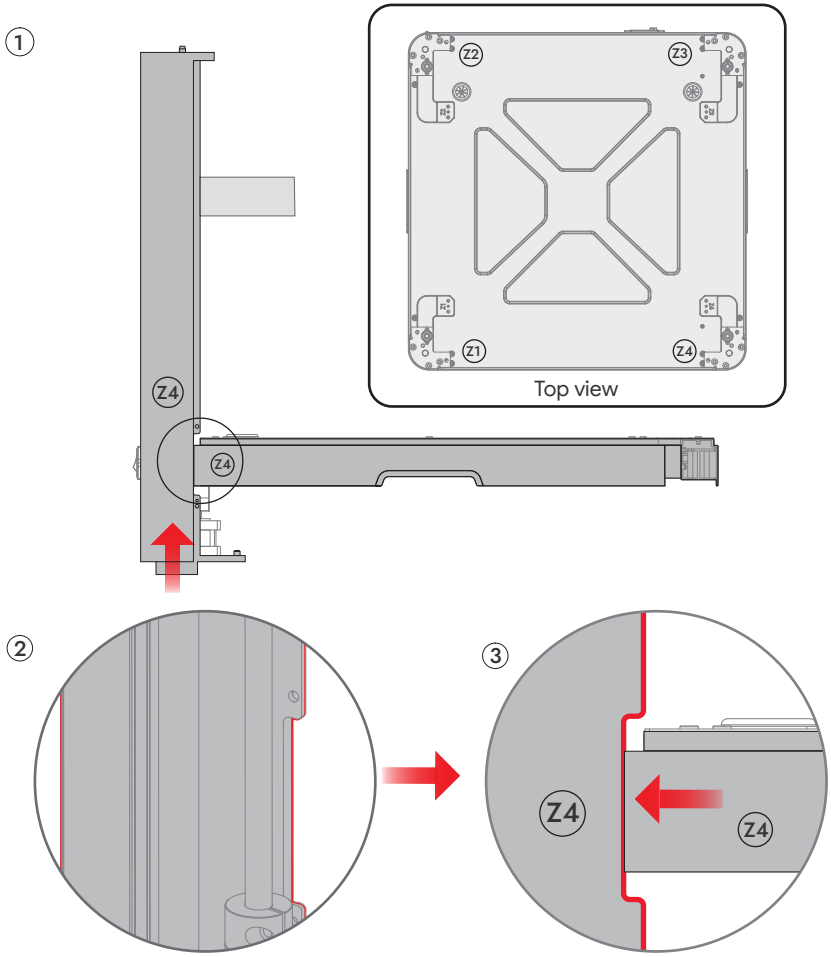

Important Notes

- Assemble the Z-axis assembly Z1 Z2 Z3 Z4 by matching the numbers on it with the corresponding numbers on the base assembly.
- The base assembly is quite heavy,so it should be placed on a sturdy table for assembly.

2. After aligning with the slot, push the Z-axis assembly upward until it is flush with the bottom of the base assembly. Secure the Z1 Z2 Z3 Z4 assembly to the base assembly by locking it into the corresponding indexing positions, one by one.

1

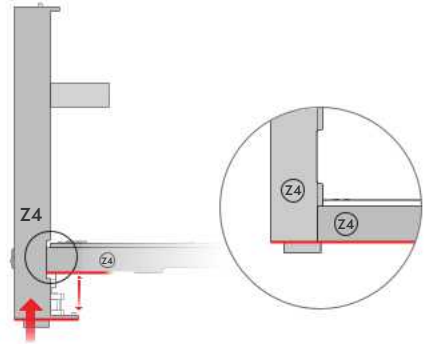

2

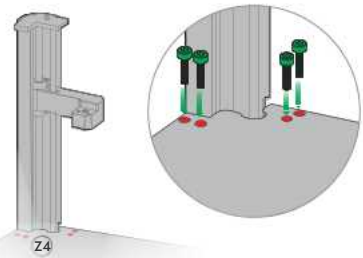

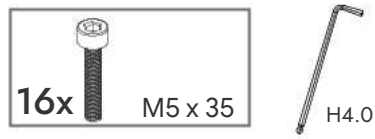

3

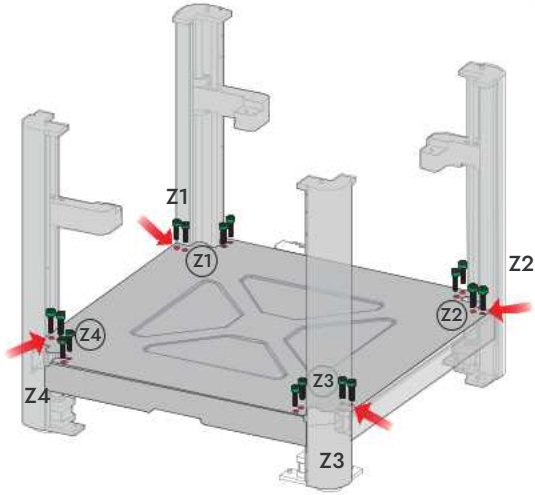

Heated Bed Assembly

1. Place the heated bed assembly onto the Z-axis assembly.

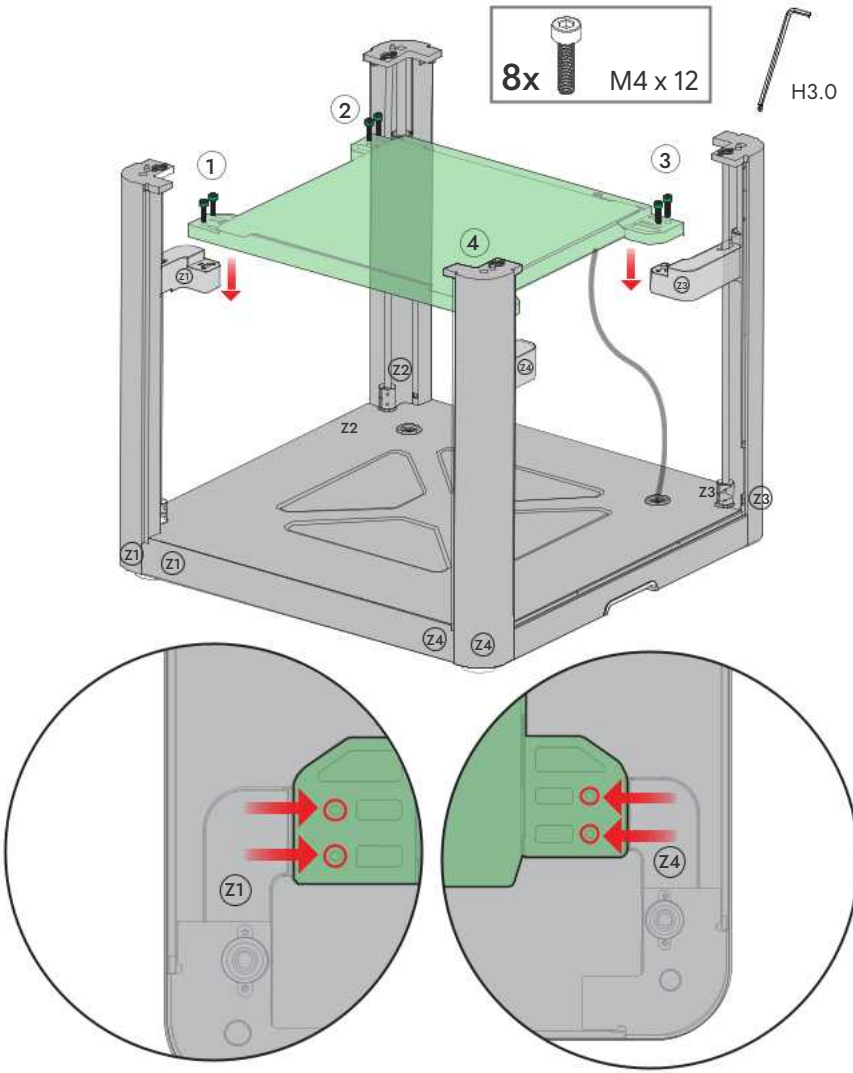

Assembly Tips

We recommend first pre-tightening the (1)(3) screws 1/2, then tightening the (2)(4) screws 1/2, and finally tightening all the screws fully.

AB-Axis Assembly

1. Take out the AB-axis assembly.

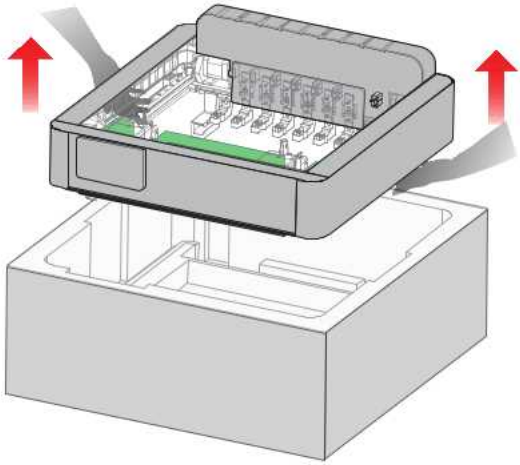

2. Connect the **AB-axis** assembly to the **Z-axis** assembly.

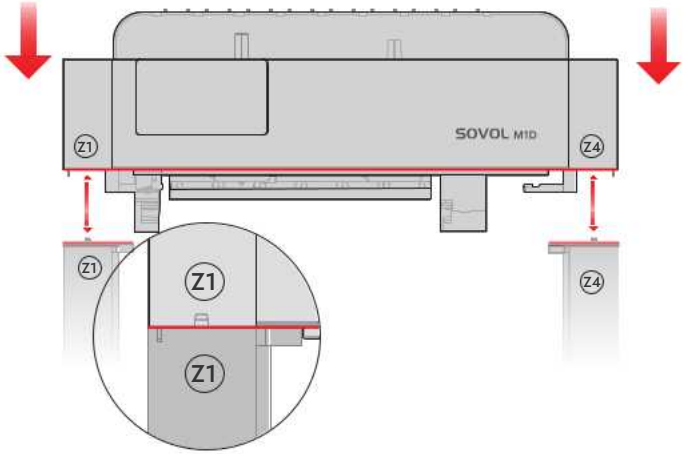

3. Securely fasten the AB-axis assembly to the Z1 Z2 Z3 Z4 assembly.

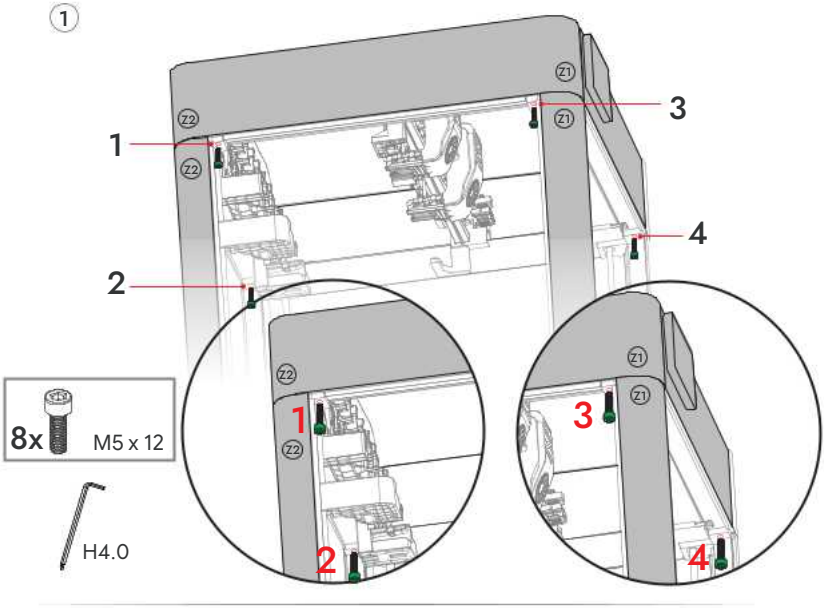

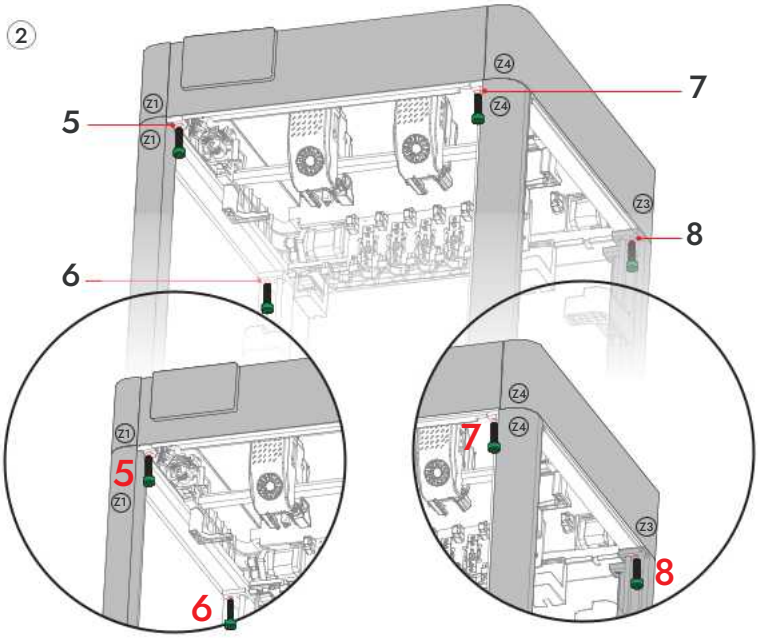

Reinforcing rib

1. Secure the reinforcing ribs to the Z1 Z2 Z3 Z4 and the base assembly.

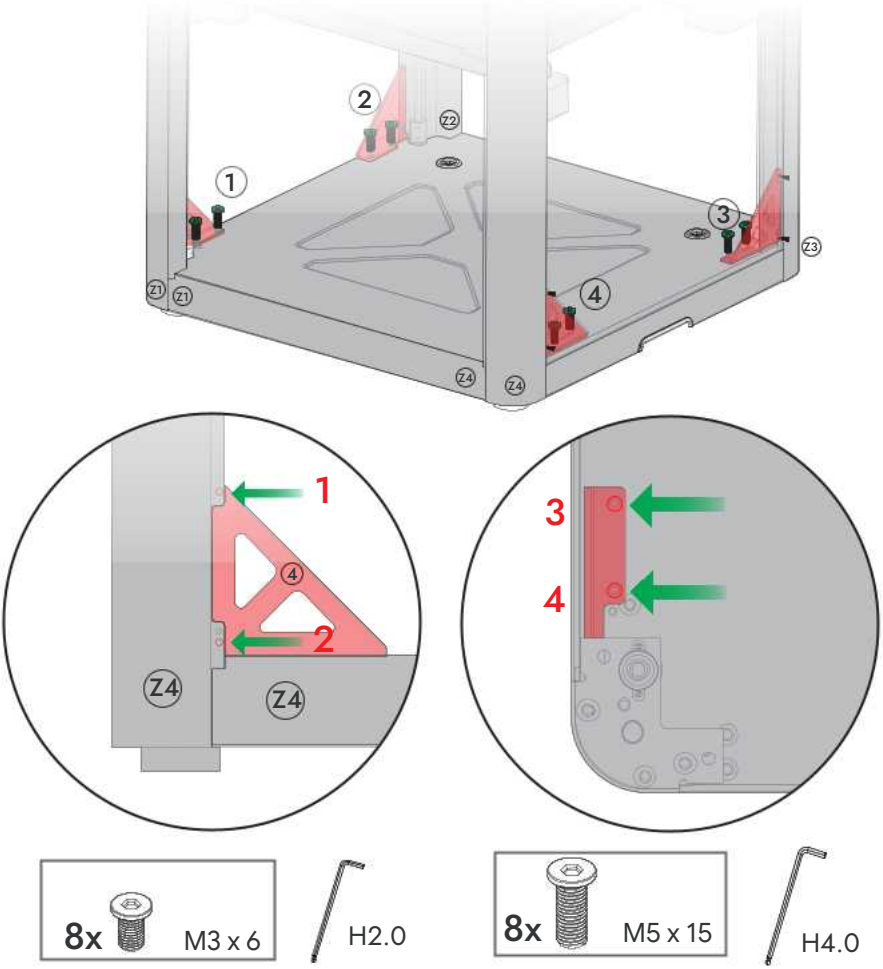

1. Connection (T0) (R) interface.

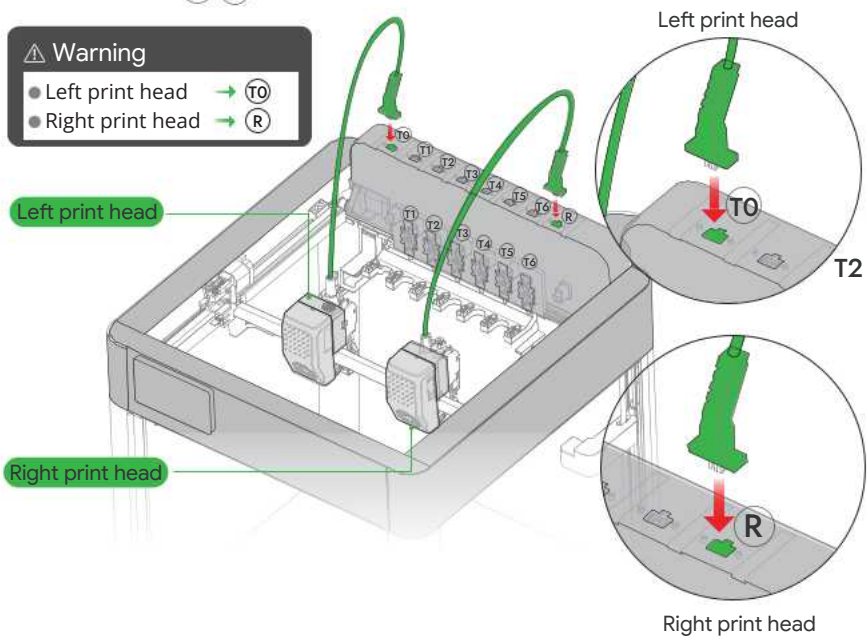

2. Connection (T1) (T2) (T3) (T4) (T5) (T6) interface.

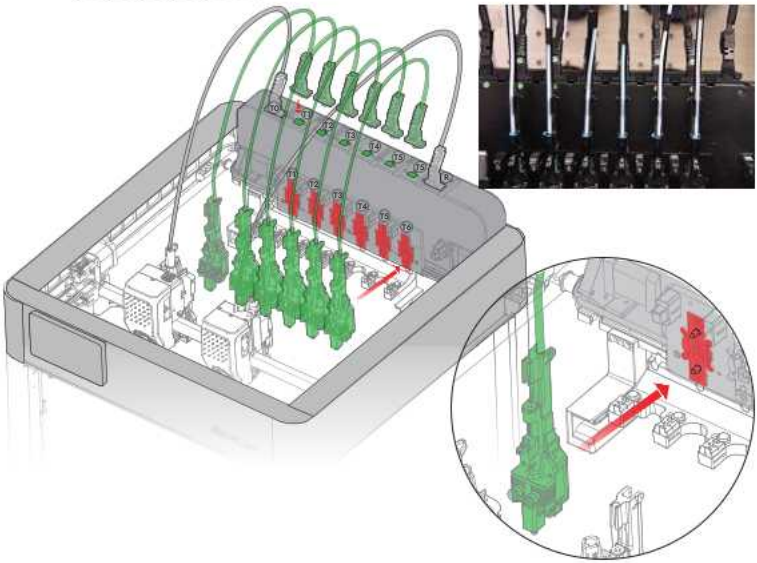

Wire Harness Clamp

1. Install the wiring harness clamp.

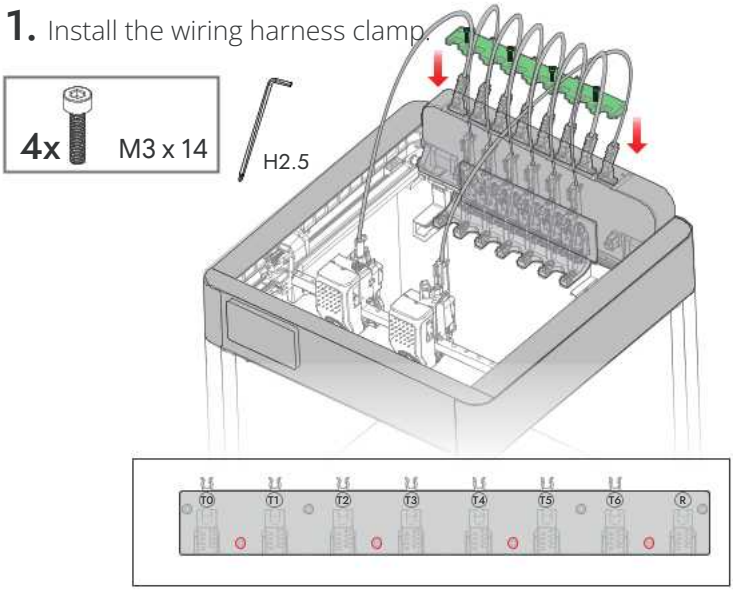

Waste Tray

1. Install the waste tray.

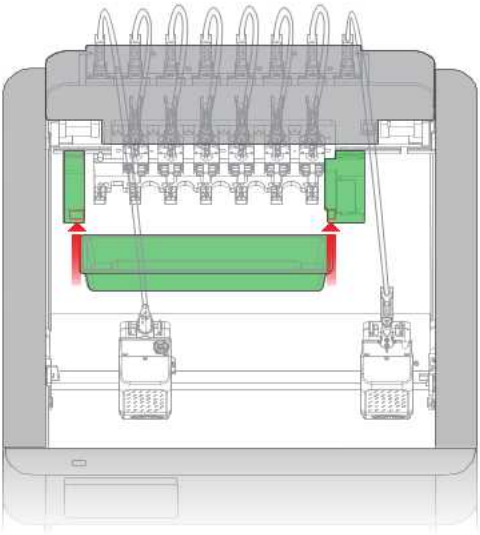

AFS

1. Install the AFS into the mounting slot on the Z3 profile then push it downward to secure it in place.

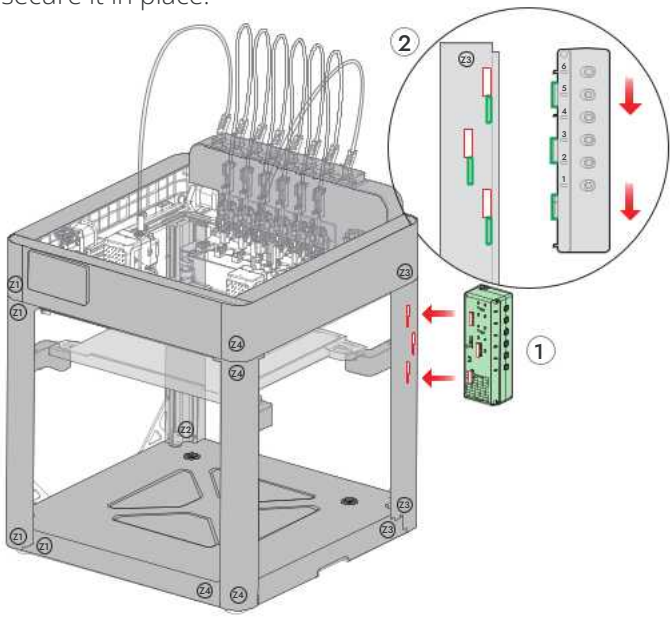

Fixed Material Rack & Filament Sensor

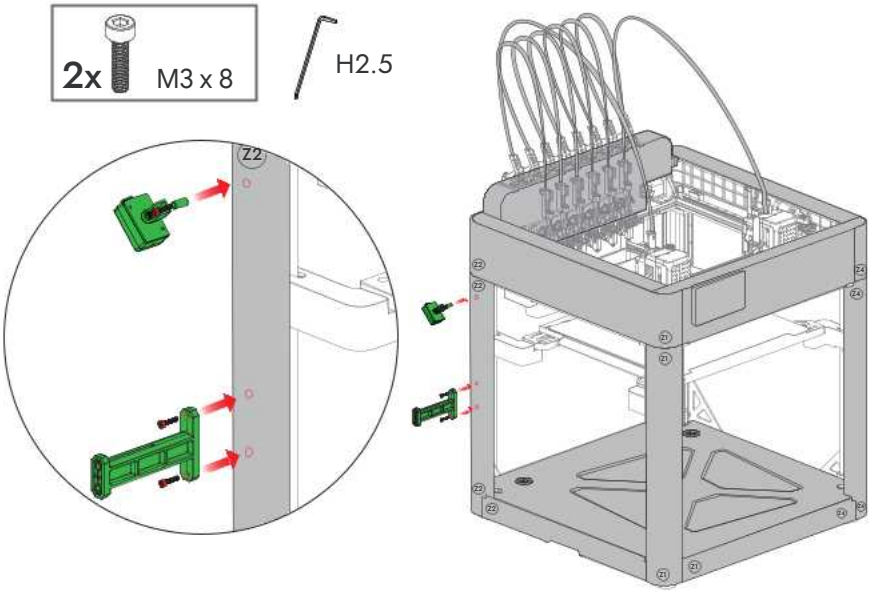

1. Install the roller into the corresponding holes on the left sheet metal panel and place on table. 1 2 3 4

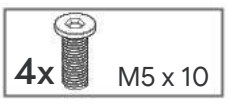

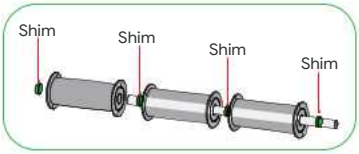

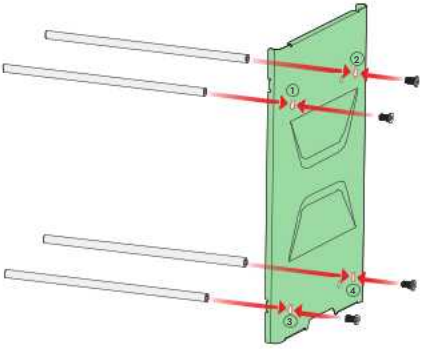

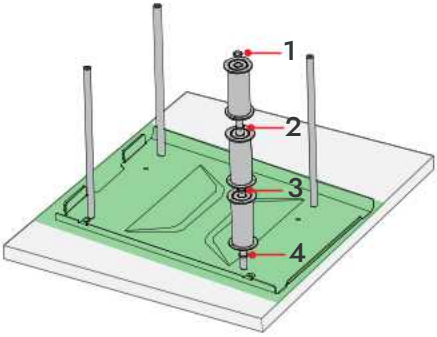

2. Install the roller into the corresponding holes on the left sheet metal panel. 1→1 2→2 3→3 4→4

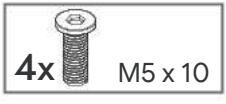

Important Notes

- Stand the rack upright.

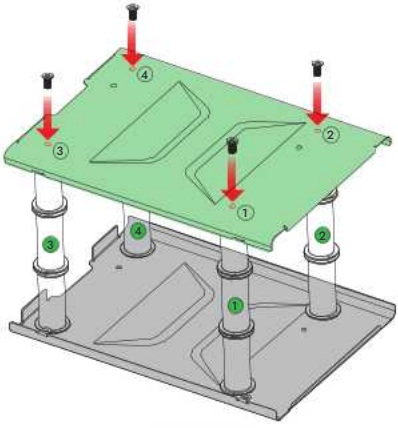

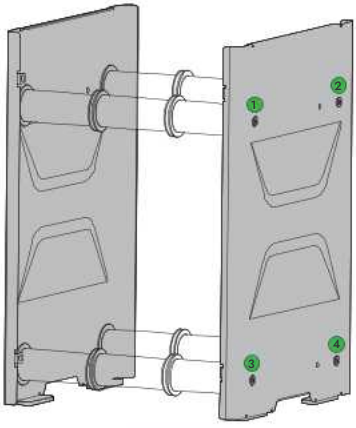

3. Install the consumables rack mounting plate into the corresponding holes. 1 → 1 2 → 2

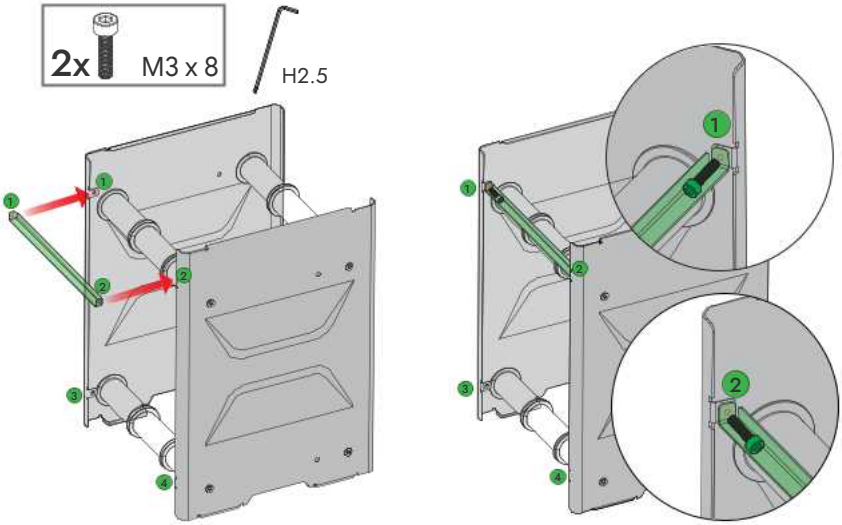

4. Install the consumables rack mounting plate into the corresponding holes. 3 → 3 4 → 4

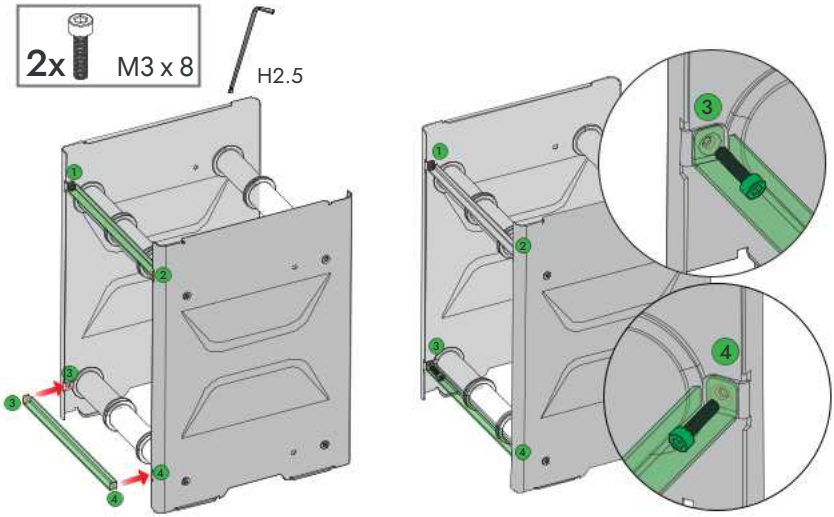

Important Notes

- Supports trays with widths of **50 mm to 68 mm** and diameters of **197 mm to 202 mm**. Plastic trays are recommended.
- It is not recommended to place missing and/or damaged trays on the tray rack for use.

Teflon Tube Connections

1. The extrusion head code T1 T2 T3 T4 T5 T6 corresponds to the AFS code 1 2 3 4 5 6 connection.

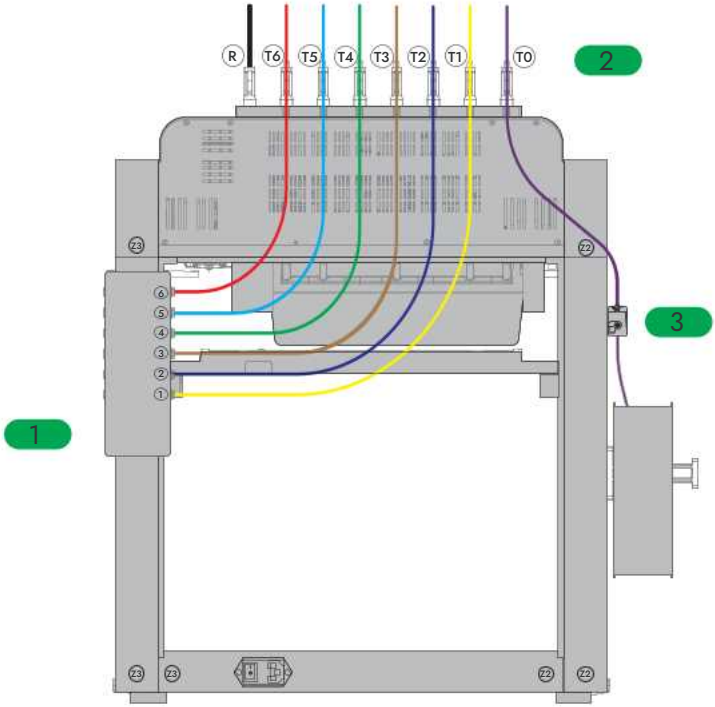

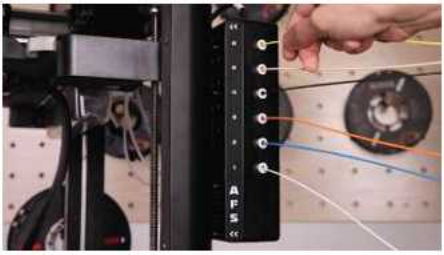

Important Notes

- Teflon tubing with different numbers on the extrusion heads varies in length; please connect them to the corresponding numbers on the AFS.

Introduction to Wiring Harnesses

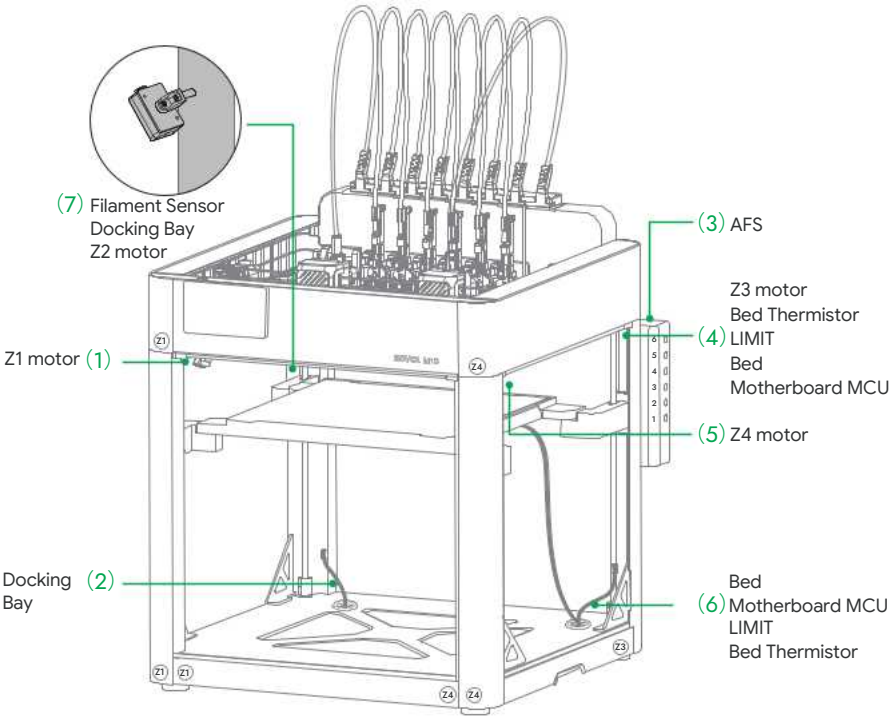

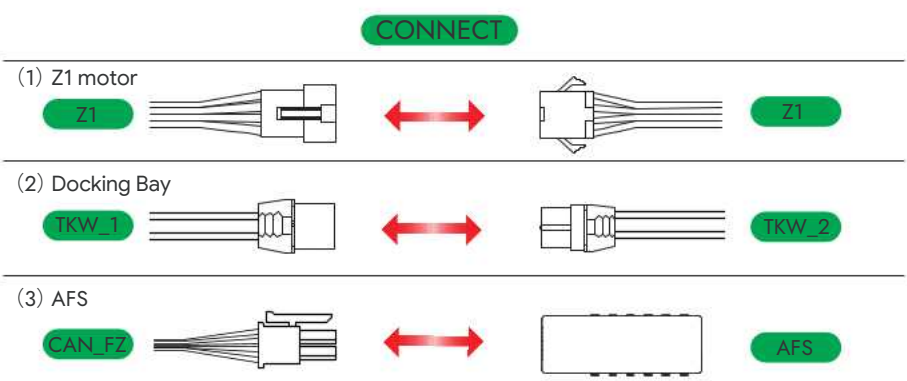

(4) Z3 motor,Heated Bed Thermistor,LIMIT,Bed,Motherboard MCU

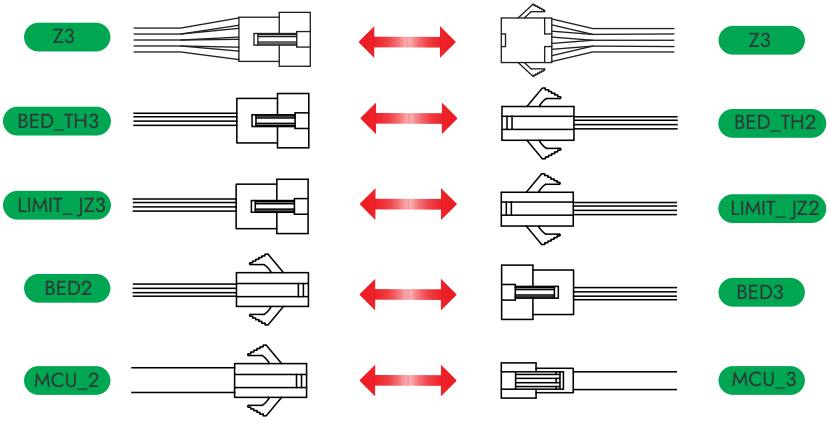

(5) Z4 motor

(6) Motherboard MCU,Bed,LIMIT,Bed Thermistor

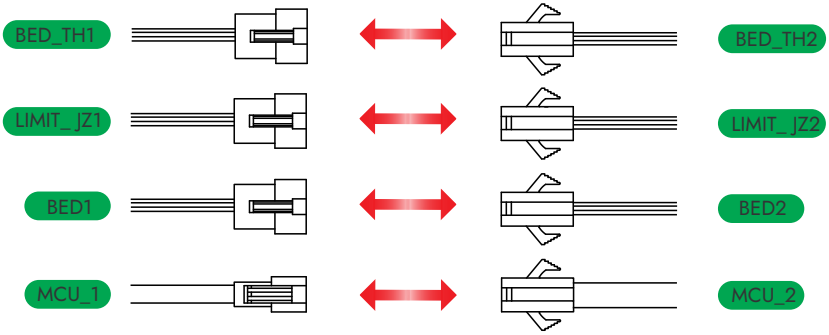

(7) Filament Sensor,Z2 motor

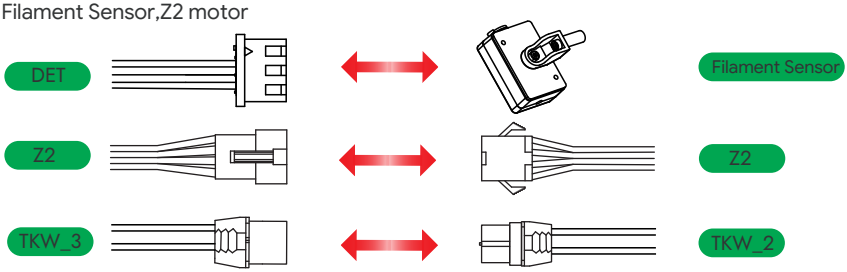

⚠ Warning

- Before turning on the power, make sure the wiring harness is connected correctly; otherwise, the equipment may be damaged.

Before Use

Important Notes

Before printing for the first time, make sure the printer is positioned correctly, has completed the initial setup, and has finished the automatic calibration.

This section will guide you step by step through these preparatory steps to ensure that your printer is in optimal condition for its first print job.

1. Printer Placement

To ensure print quality and operational safety, maintain a clean work area and place the printer on a stable, level surface. Ensure that the desk or stand used has sufficient structural strength to support the printer's weight.

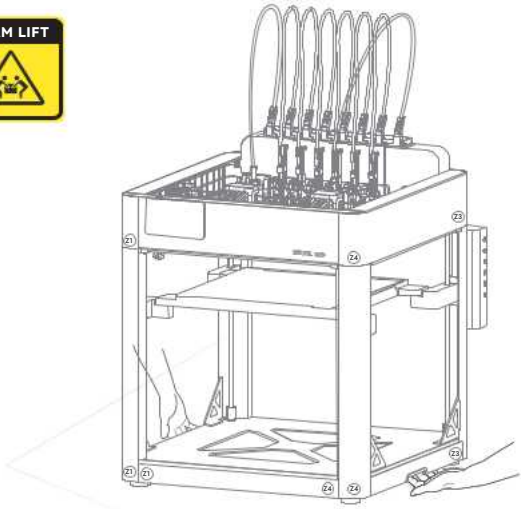

⚠ Warning

- If you need to move the M1D, please have at least two people carry it together.

Important Notes

- The M1D is equipped with anti-vibration rubber feet at the base to dampen minor vibrations generated during printing. The placement surface must be stable and non-slip to prevent the device from shifting or falling during operation.
- Automatic calibration should be performed after the printer has been positioned.If the device is moved after calibration is completed, measurement accuracy may be compromised. After moving the device, please recalibrate the printer.

2. Check the power-on status

1) Make sure the power cord is properly connected and that all cables are connected correctly.
2) Make sure the power switch on the back of the printer is turned on and the indicator light is on.
3) The screen should be working properly and display the initial setup screen.

3. Initial Calibration

On the first startup, the printer will automatically enter the initialization process. Follow the on-screen prompts to complete the following steps:

1) Language,Region,and Network Settings

Click Start and select language ; select WiFi . Network setup can be skipped if not required.

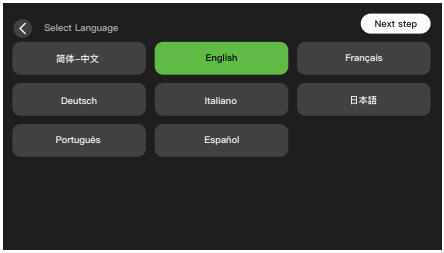

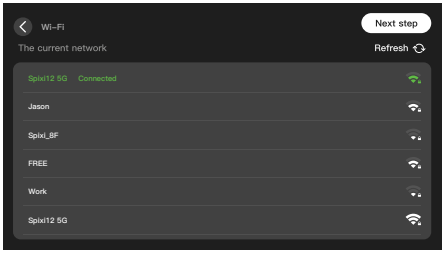

2) Power-on self-test

The machine will be tested prior to dispatch. Before the machine performs its first self-test, please ensure that the nozzle is clean to prevent molten residue from affecting calibration during the self-test.

⚠ Warning

When performing equipment calibration, it is essential to ensure that the nozzle tip is clean and in its standard condition.

- Eddy calibration
- Dual X-axis step calibration
- Tool head calibration
- Vibration compensation
- Thermal bed grid scanning

Any residual molten plastic, carbonised deposits or foreign matter on the nozzle will alter the physical distance between the hot end and the heated bed or probe, leading to errors in the calibration data and, consequently, affecting the quality of the first-layer adhesion and print accuracy.

Cleaning the Left/Right print head

Cleaning the nozzle > T1 T2 T3 T4 T5 T6

3) Machine Calibration

Navigate to the calibration page and tap Start. The printer will automatically execute the following calibration procedures:

- Eddy calibration
- Dual X-axis step calibration
- Tool head calibration
- Vibration compensation
- Thermal bed grid scanning

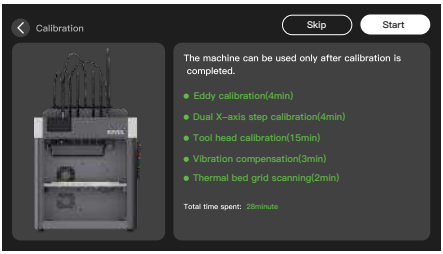

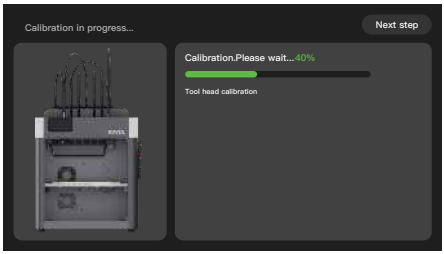

4) Edit **filament**

Following the on-screen prompts, configure the **filament brand**, **material**, and **color** for toolhead T0 T1 T2 T3 T4 T5 T6. After configuration, tap "Save" to confirm.

filament brand > filament material > filament color >

5) Loading the **filament**

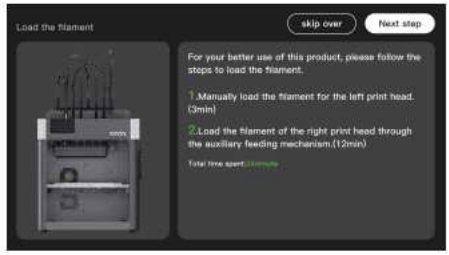

1 ● Manually guide the filament through the **Teflon tubes Fitting** of the left nozzle (T0) to the detection area above the print head, ensuring the filament end makes contact with the extruder gear. Then, tap the left feed button.

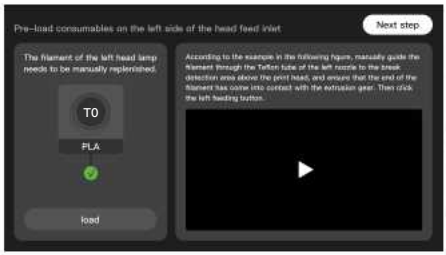

2 ● Load filament into the right print head via the **AFS**.Insert the filament into channels **1–6** of the AFS in order according to the tool head labels **T1–T6** until the ● lights come on. The AFS will automatically load the filament. Click in sequence:

√ > T1 T2 T3 T4 T5 T6 > load > Next step

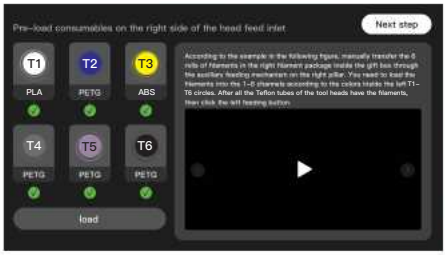

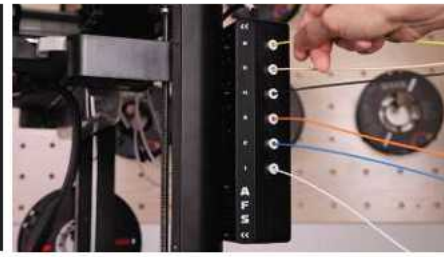

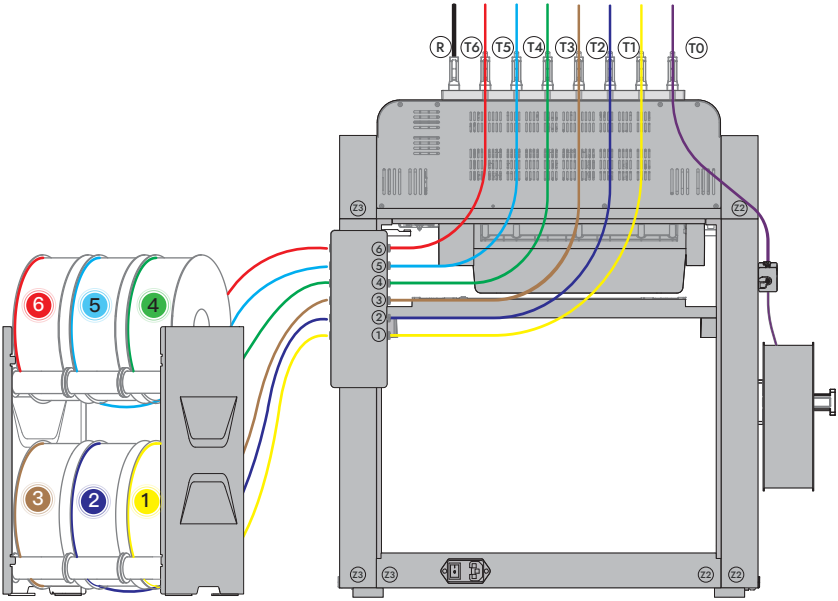

Important Notes

The filament holder can hold up to 6 spools of filament. During the filament feeding process, do not allow the filament to become tangled or knotted. This will prevent any issues during filament feeding that could affect model printing.

4. Install OrcaSlicer

To avoid installation issues or software crashes during use, please refer to the following hardware requirements before installing the software:

OrcaSlicer Minimum System Requirements

Operating System	Windows 10/MacOS 10.13/Ubuntu 20.04 or later (64-bit systems only)
Processor	Intel Core i3 or equivalent processor
Memory (RAM)	Minimum 4 GB (8 GB or more recommended)
Storage Space	At least 500 MB of available space
Graphics Card	OpenGL 3.3 or later (Windows/Linux)/Metal (macOS)

Additional Notes

*OrcaSlicer's minimum requirements are relatively low,particularly in terms of operating system compatibility and storage space.

1. Download and Install

1) Locate the **Orcaslicer** installer on the **USB drive**, or find the download link on the wiki page and download it, then click to install.

2) Install OrcaSlicer by following the on-screen prompts to add printer models and materials.

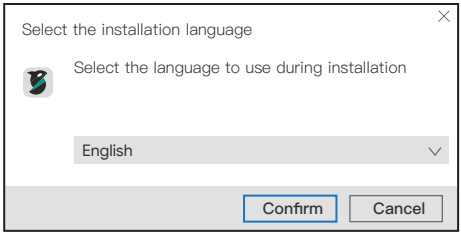

- Follow the installation prompts. The installation path can be modified-it is recommended to install on a drive other than the system (C:) drive.

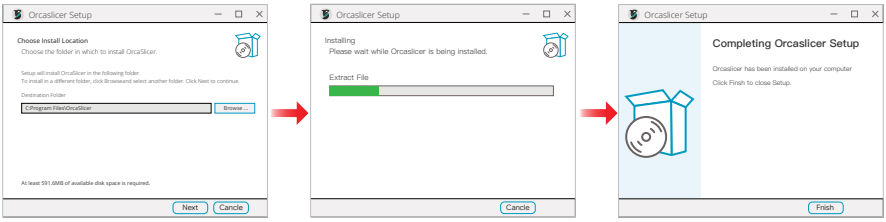

? Important Notes

If the software fails to launch after installation (e.g., clicking the icon does nothing), please install **VC_redist.x64.exe**. This is a critical runtime component required by many professionall applications, providing the C++ standard library and runtime environment.

2. Select Printer Model and Filament

① Follow the software prompts to configure settings.

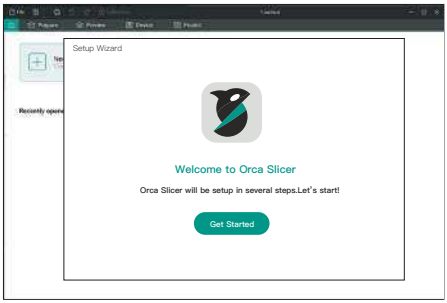

② Add Printer Sovol M1D

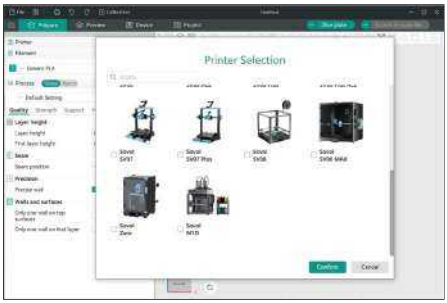

③ Select the filament brand and type

④ Finish Setup

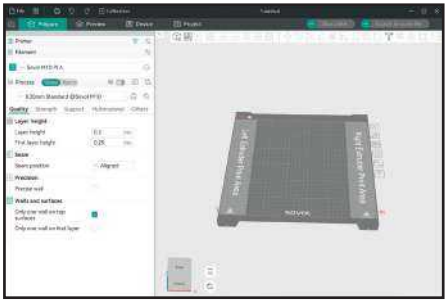

3. Import Models and Slice

1) **Import 3D models**: the software supports importing model files in formats such as STL ,STEP,and 3MF. When a 3MF file contains process parameters,OrcaSlicer will automatically attempt to apply them.

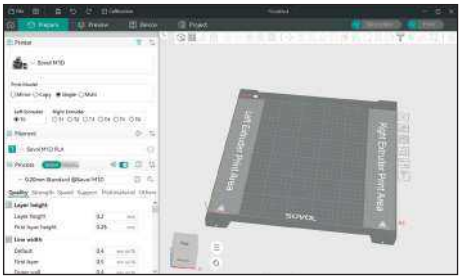

2) Select the model.The toolbar provides common operations including **Scale**,**Mirror**,and **Cut**. The parameter settings panel on the left allows you to modify print parameters such as **Strength, Print Speed,** and **Support settings.**

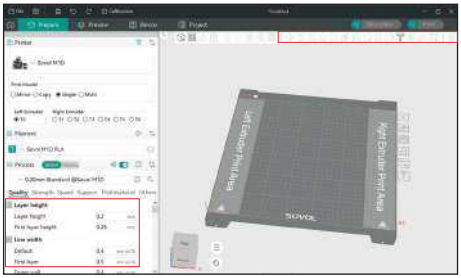

5. OrcaSlicer Print Mode

1. Single-Nozzle Printing

During standard printing, only a single print head is used,whilst the other remains idle; this is suitable for everyday model production.

OrcaSlicer

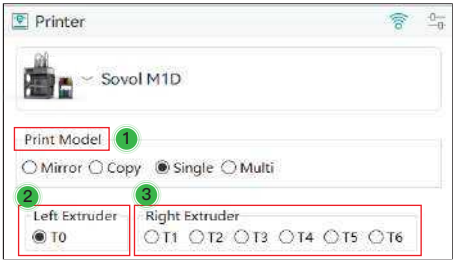

- Print Model : Single
- Left Extruder : T0
- Right Extruder : T1 T2 T3 T4 T5 T6

> One of them

- Left Extruder Printing area

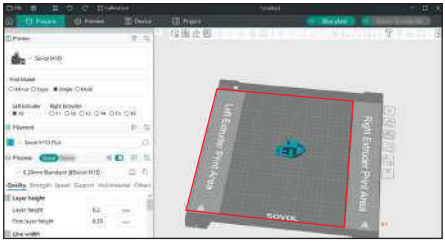

- Right Extruder Printing area

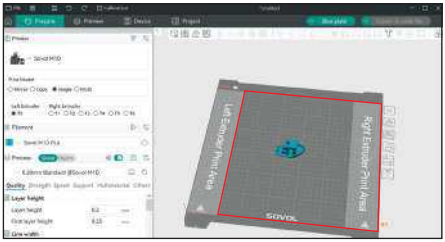

Additional Notes

- Printing area : 300 × 300
- Red area : Model placement area
- Grey area : Tool head docking area,models must not be placed here

2. Mirror Mode Printing

The dual print heads print left- and right-symmetrical models separately, and the slicing software automatically generates mirrored models, resulting in perfectly symmetrical parts.

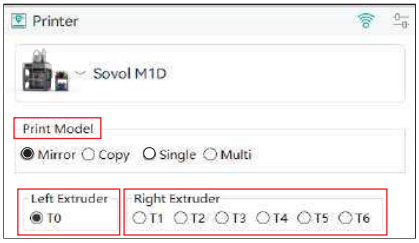

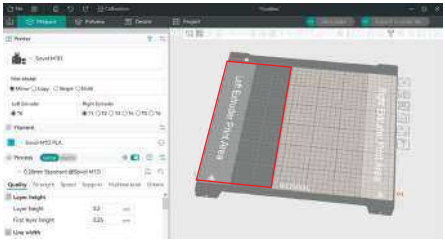

- Print Model : Mirror
- Left Extruder : T0
- Right Extruder : T1 T2 T3 T4 T5 T6 One of them

Additional Notes

- Red area : Model placement area
- Grey area : Tool head docking area,models must not be placed here

3. Copy Mode Printing

In this mode, the slicing software virtually divides the print bed into two independent areas: left and right.

The left print head prints the model in the left area, while the right print head simultaneously prints the same model in the right area.

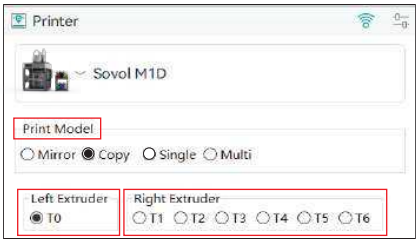

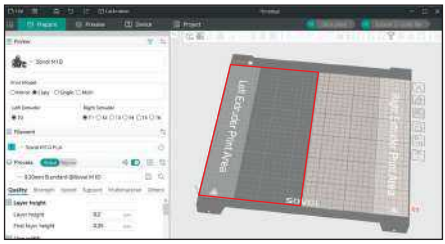

- Print Model: Copy
- Left Extruder: T0
- Right Extruder: T1 T2 T3 T4 T5 T6 One of them

Additional Notes

- Red area: Model placement area
- Grey area: Tool head docking area,models must not be placed here

4. Multi-Nozzle Printing

The independent nozzle system assigns a dedicated print head to each material type. Compared to traditional single-nozzle cutter-based color switching, toolhead-switching for multi-color printing effectively eliminates the time and material waste associated "nozzle flushing."

- Print Model: Multi
- Extruder: T0 T1 T2 T3 T4 T5 T6

Multi-color Printing

Different parts or layers of the same model are printed with different colors or materials by the two toolheads.The left toolhead prints one material while the right toolhead prints another, alternating to complete the entire model.

On the right side, you can select and switch between T1–T6 hotends.

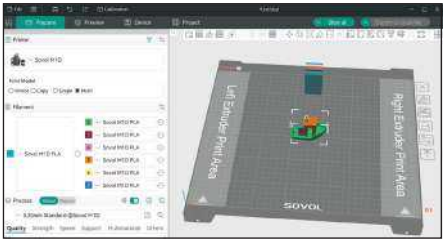

Important Notes

- When switching from Multi mode to Single, Copy or Mirror mode, all slice colours you have set will be cleared; please save your settings before switching.
- Before importing or exporting 3MF multi-colour slice files, please ensure that Orcaslicer is set to Multi mode.

6. Slicing and Exporting

1) Select the slicing method

- Print plate
  Prints only the currently selected plate.
- Print all
  Prints all plates in sequence.

2) Export G-code files

- **Send**

Sends slice files for the selected plate to printer's USB storage.

- **Send all**

Sends slice files for selected all plate to printer's USB storage.

- **Export plate sliced file**

Exports slice files for the selected plate and sends them to printer storage.

- **Export all sliced file**

Exports slice files for the selected all plate and sends them to printer storage.

7. Start printing from the printer screen

1) Insert the USB stick,click > **Print** ,and select the model you want to print.

2) The M1D supports sending G-code via USB or a local area network for printing. Once a USB drive is inserted,select the file and the machine will automatically copy the G-code file to the local storage.

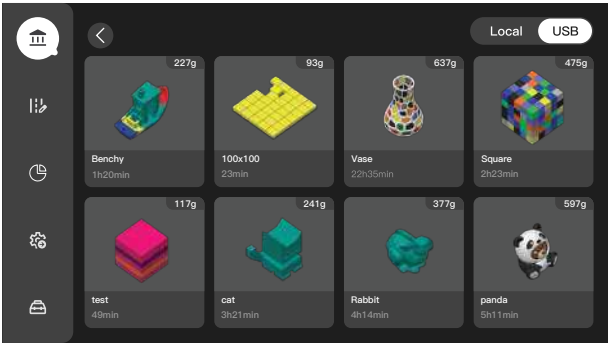

- Select the model you wish to delete and press and hold it.
- Tap Remove to delete the model.

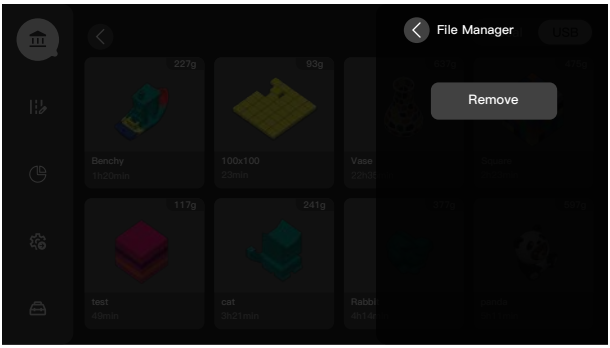

3) On-screen interface

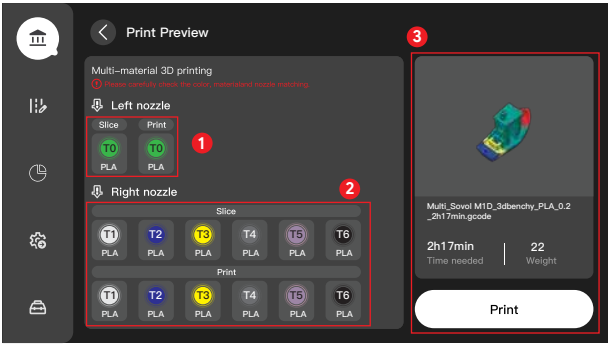

1 Left nozzle T0 :

Before printing, please check that the filament colour and material specified in the slicing software match those of the filament installed in the printer.

2 Right nozzle :

Please ensure that the colour and material of the installed filament match those specified in the slicing software's G-code file; print heads without filament will not be displayed.

3 Print : Click Print to start printing once you have confirmed.

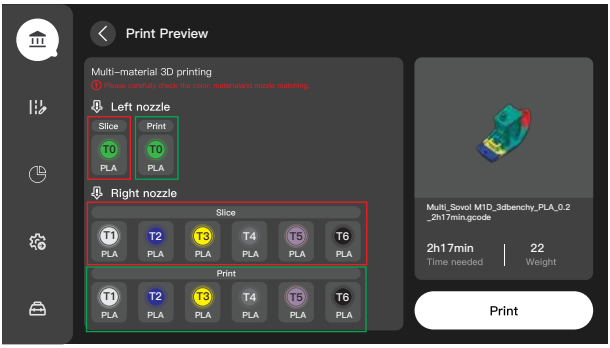

● Red symbol : Slice refers to the filament material and colour set in the slicing software.

● Green symbol : Print refers the filament material and colour set on the machine; if these do not match, you can click to amend them.

Important Notes

- Before starting the print, please check that the filament colour and type on the left and right print heads of the machine match those in the slicing software;a mismatch in material will prevent printing.
- If the filament colour or material in the 'Print' and 'Slice' sections do not match, you can click the 'Print' icon in the green area to make changes and ensure they match the slicing file.

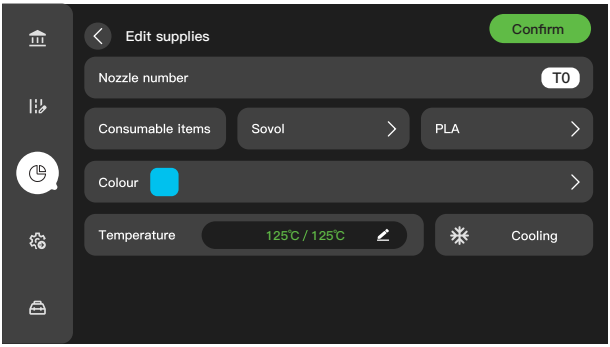

Important Notes

- The printer's print mode is determined by the mode selected in **Orcaslicer** .
- Before starting the print, please ensure that the correct print mode has been selected in the slicing software, and then proceed with the print.
- During the print, you can only change the filament material and colour; you cannot change the print mode.

8. Removing the Model

1) After the print job is completed, do not remove the model immediately. Wait patiently until both the heated bed and the model have completely cooled to room temperature. Forcibly removing the model before it has fully cooled may cause
2) If the model is difficult to remove, you can gently bend the print bed or use a spatula to help remove it.
3) Remove the scraper tower (if present),carefully remove the calibration lines with a scraper, then reinsert the print bed to begin the next print.

Important Notes

Do not touch the surface of the printing plate with your hands, as oils and sweat from your hands can contaminate the surface, which may affect adhesion and result in poor print quality. If you accidentally touch the plate, we recommend washing it with hot water and dish soap to ensure it provides optimal adhesion.

9. Waste Disposal

During the start of a print or when performing multi-color/multi-material printing, the printer will actively extrude a certain amount of excess material to clear the nozzle of residual old filament and ensure print quality. This excess material is referred to as "**purge waste**" or "**waste material**".Waste is collected through the dedicated waste chute located beneath the toolhead carriage.

1) Pre-Print Check:

Before each print, inspect the waste chute for excessive residual waste. Clean it promptly to prevent operational interference.

2) Regular Cleaning:

Develop a routine of emptying the waste collection container to prevent waste accumulation from interfering with right toolhead switching operations.

3) Multi-Color Printing Frequency:

When using multi-color or multi-material printing, the toolheads will switch filaments frequently. Longer print jobs generate more waste. During extended printing sessions, periodically check and empty the waste chute.

4) Proper Disposal:

Dispose of collected waste materials in accordance with local environmental regulations or applicable national/regional laws. Recycle at designated collection points when available.

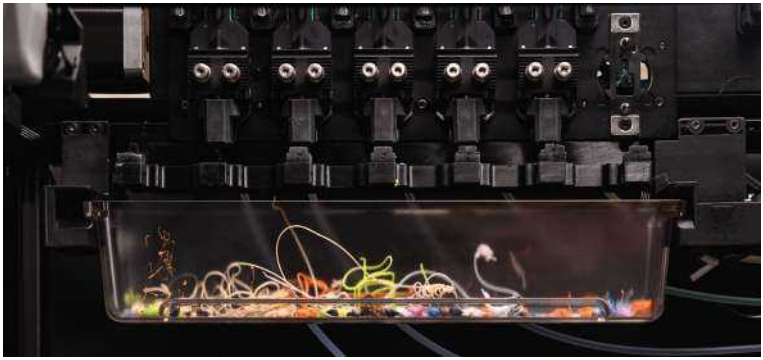

Screen Operations

This chapter introduces the printer's main control methods and basic functions, including touchscreen operation, basic settings, print status monitoring, and access to common features. By familiarizing yourself with these operations, you'll be able to quickly get started with the printer's daily use and maintenance.

1. Print

Tap Print to access the model selection interface, which includes built-in multi-color test files. From this screen, you can select local files or USB files for printing. Local files can be uploaded to the printer after slicing in OrcaSlicer.

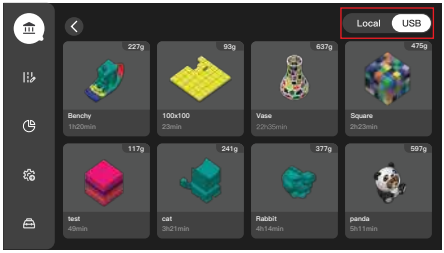

2. Toolhead Editing

1) The left and right toolheads can be independently configured, with precise settings for nozzle temperature, type, material,and diameter. On the printer's touchscreen, navigate to **Settings > Nozzle and Extruder** to access and adjust all relevant extrusion parameters.

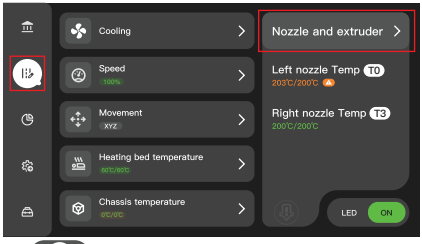

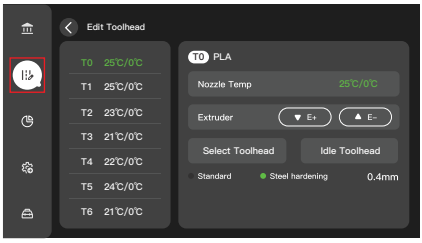

2) In this interface, you can set the filament type, filament color, as well as load and unload filament. Before initiating multi-color printing, verify that the selected filament material and color are correct.

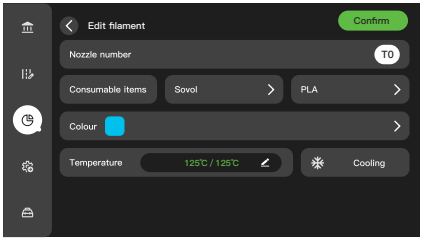

3) This interface allows for individual toolhead configuration, including separate editing and homing of the right toolhead. This is particularly useful for filament changes or hotend maintenance.

Important Notes

Before making any adjustments, ensure that the machine interior and the build plate are clear of any objects. Do not place your hands inside the print area during operation to avoid accidents.

3. Wi-Fi Settings

> The printer can connect to a local network via Wi-Fi. When the printer and your device are on the same Wi-Fi network, you can access Mainsail for control and printer management via the IP address. You can also send G-code files from your slicing software to the printer using the IP address.

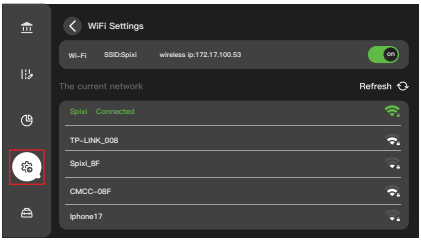

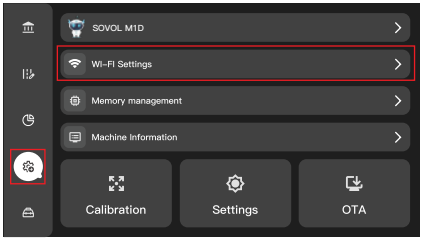

4. Help

When the printer encounters a fault or the system prompts that maintenance is required, relevant alert information will be displayed here.

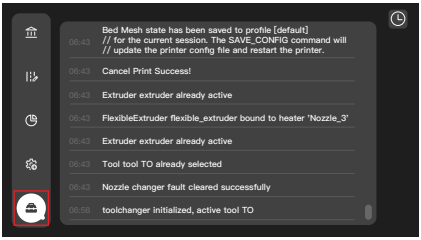

5. Fan Control

> / > This interface allows control of the cooling fans for both the left and right toolheads, During printing, these fans provide active, rapid, and localized cooling of the printed layers—improving the printed layers—improving overhangs, reducing stringing and oozing, and enabling faster print speeds.

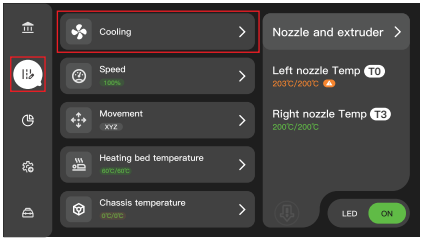

6. LED Light Control

Opening the cover not only allows you to monitor the print progress and the inside of the machine in real time, but also provides good lighting for the AI detection feature.

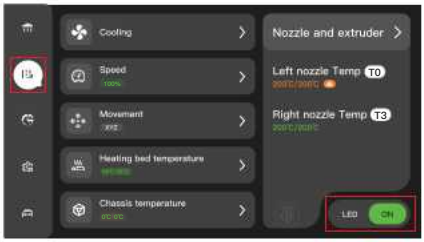

7. Heated Bed Temperature Control

On the printer screen, navigate to > , enter the desired value,and set the bed temperature. If printing with high-temperature filaments, you can preheat the bed in advance to maintain an optimal chamber temperature.

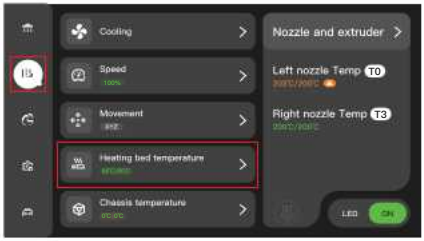

8. Chassis Temperature Control

***Requires the chamber heating kit to use this function.**

> / > The chamber heating kit creates a stable, sealed printing environment, enabling higher-quality and stronger prints while improving the overall user experience. Once the enclosure panels are installed, you can print high-temperature filaments such as ABS, ASA, and Nylon. When printing with these materials, ensure that the chamber temperature is consistently maintained at approximately 40–60°C.

9. Print Speed

This option allows you to adjust the print speed in real time during the printing process, affecting both total print time and model surface quality. In general, increasing the print speed reduces printing time but may compromise surface finish; decreasing the print speed enhances model quality but extends printing duration.

navigate to > to adjust the print speed. Three preset modes are available:

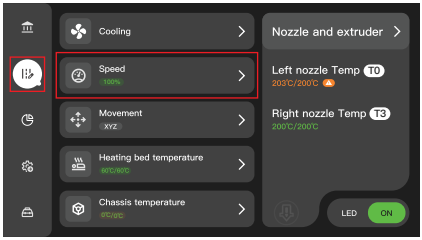

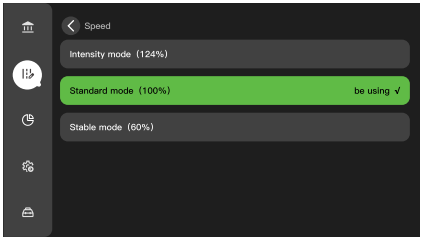

- Intensity mode: **124%** of normal print speed and acceleration
- Standard mode: **100%** of normal print speed and acceleration
- Stable mode: **60%** of normal print speed and acceleration

You can flexibly adjust the print speed based on actual requirements. For example,when printing complex details or overhang structures, reducing the speed can improve surface quality and increase the success rate.

10. XYZ-Axis Movement

> When the printer is in standby mode, users can manually control the movement of the toolhead and the heated bed along the X, Y, and Z axes. This function is particularly useful for cleaning or maintenance tasks, such as repositioning the toolhead and bed to a more accessible location for easier operation.

Operating Procedure: On the touchscreen, navigate to → Movement XYZ to manually control each axis.

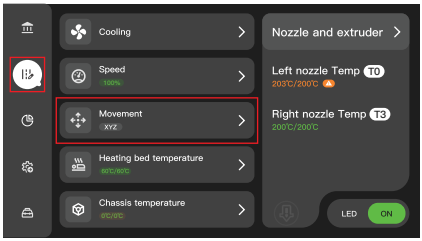

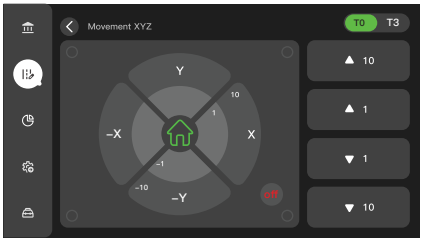

Toolhead: Use the **X/-X** and **Y/-Y** directional buttons to move the toolhead along the X and Y axes. You can adjust the position using the "**1 Step**" or "**10 Steps**" incremental buttons.

Heatbed: Use the "**1 Step**" or "**10 Steps**" buttons to raise or lower the bed height.

11. Loading/Unloading Filament

The Automatic Filament System **(AFS)** can perform automated filament loading and unloading. In this interface, select T0 , tap load and insert the filament into the toolhead to complete installation. For the right toolhead, simply insert the filament into the corresponding AFS port, and the AFS will automatically complete the loading process.

To unload filament, tap Unload . The toolhead will automatically retract the filament.

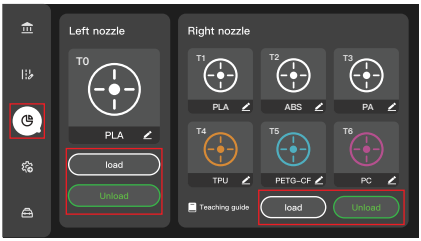

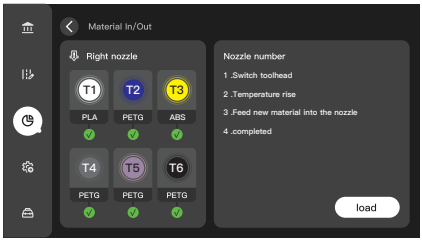

12. Memory Management

> Access Memory Management to retrieve log files and export time-lapse footage. If the printer encounters an error, you can export the log files and send them to SOVOL for technical support. This interface also provides options to clear log files and time-lapse data, which is useful when storage capacity is insufficient.

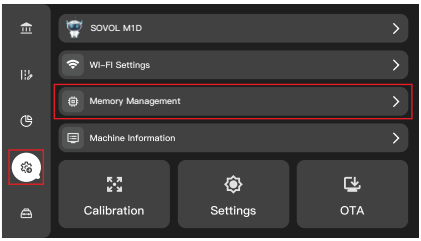

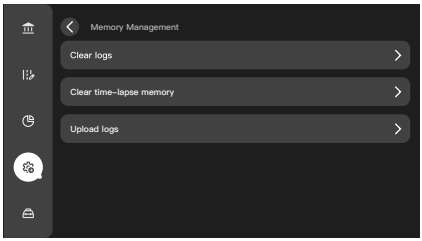

13. Machine Information

> Access the latest firmware version and update details. Updating to the latest firmware can effectively resolve certain operational issues.

Users can quickly view the current device firmware version and related software version information for version tracking and upgrade management. The interface clearly displays the device's unique serial device's unique serial after-sales support.

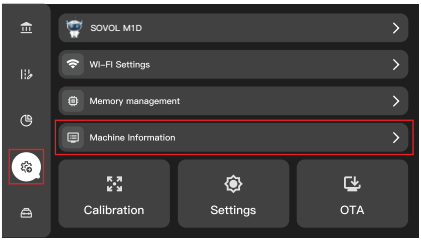

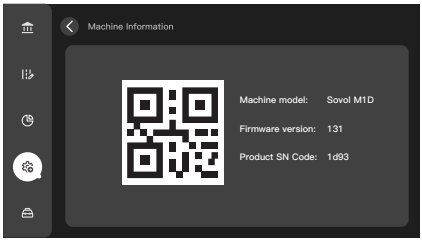

14. Calibration

> This interface integrates multiple intelligent calibration tools designed to assist users in rapidly completing device setup and improving print accuracy and operational stability. Key functions include:

- Eddy calibration
- Dual X-axis step calibration
- Tool head calibration
- Vibration compensation
- Thermal bed grid scanning

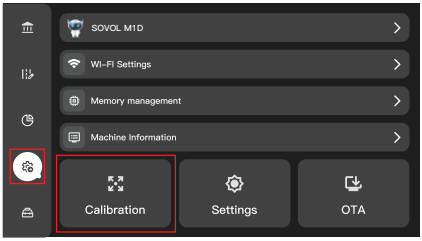

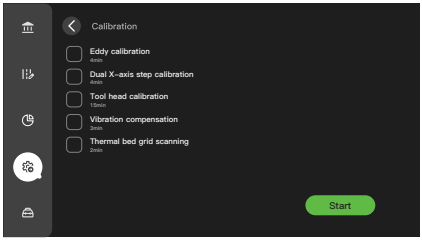

15. Settings

> Supports **language switching**, **auto-sleep mode**, **AI intelligent monitoring**, **extruder disable**, and **factory reset**.Multiple languages are supported to accommodate diverse user needs.The printer automatically enters a low-power state when idle. The printer automatically enters a low-power state when idle. providing anomaly alerts to improve print success rates. Factory reset allows for one-click restoration of all settings, quickly resolving system anomalies.

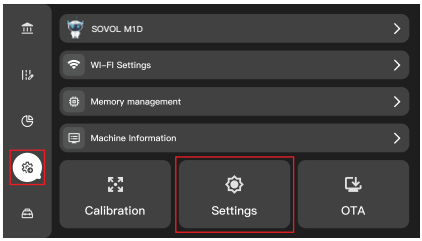

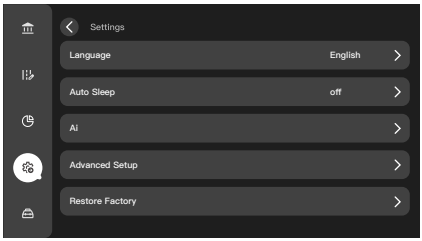

16. OTA Online Upgrade

> Supports remote acquisition and installation of the latest firmware via wireless network—eliminating the need for computer connections or memory cards for complex system updates. One-click system updates continuously optimize device performance and stability, making maintenance more convenient.

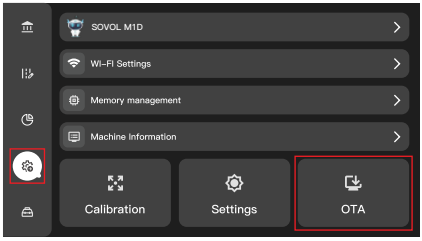

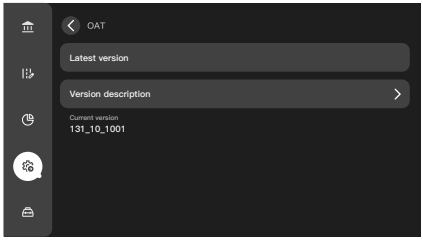

Parameters

Machine Dimensions

Unit Dimensions (L) × (W) × (H)	About 563×574×971.5mm

(*Excludes Fixed Material Rack and AFS)

Unit Dimensions (L) × (W) × (H)	About 678.5×651.5×971.5mm

(*Includes Fixed Material Rack and AFS)

Weight

Body Only(*Includes external material racks and AFS)	About 29.0kg
With packaging (GW)	About 40.0kg

Materials

Framework	Aluminum and Steel
Case	Plastic

Tool Head

Hot End	All-metal
Extrusion Gear	Hardened Steel
Nozzle	Hardened Steel
Maximum Nozzle Temperature	300℃
Default nozzle diameter	0.4mm
Supported Nozzle Diameters	0.2mm、0.6mm、0.8mm
Consumable Diameter	1.75mm

Heated Bed

Build Plate Material	Flexible Printed Steel Plates
Included Build Plate Type	Textured PEI Printing Plates
Supported Build Plate Type	Textured PEI printing sheets, smooth PEI printing sheets
Max HeatBed Temperature	100℃

Print Size

Single-Nozzle Mode	300 × 300 × 350mm
Mirror Mode	138 × 300 × 350mm
Copy Mode	178 × 300 × 350mm
Multicolor Printing Mode	240 × 300 × 350mm
Multi-Color R-Extruder Print Mode	300 × 300 × 350mm

Power Requirements

Voltage	90~132VAC/176~264VAC
Maximum Power*	1212W@220V/1194W@110V
Average Power	150~447W@220V/141~511W@110V

Software

Slicing Software	OrcaSlicer
Supported Operating Systems	Windows,MacOS,Linux

Sensor

Live View Camera	Built-in;1920*1080
Nozzle Camera	Built-in;1600*1200@5fps
X-Y Calibration Camera	Built-in;1280*720@30fps
Filament Run Out Sensor	Support
Filament Tangle Sensor	Support
Power Loss Recovery	Support

Electronic Components

Display	5.0-inch 480*RGB*850
Storage	Built-in 32 GB EMMC
User Interface	Touchscreen and PC operation
Motion Control Processor	Single-core Cortex-M4
Application Processor	Quad-core Cortex-A53,1.4GHz

Wi-Fi (Wireless Local Area Network)

Supported Standards (Equivalent to IEEE 802.11b/g/n/a/ac Standards)

Wi-Fi Transmission Frequency (Center Frequency)

2.4 GHz band and 5.8 GHz band, 20 MHz/40 MHz

Explanation

*Specifications may vary by country or region.

Bluetooth

Standard Compatibility: Compatible with Bluetooth Specification Version 5.2 (Bluetooth Low Energy)

Transmission Methods: FHSS/GFSK/DQPSK/DPSK Modulation

Attachment

We recommend using genuine **SOVOL** accessories.

This product is designed to perform best when used with genuine **SOVOL** accessories. Therefore, we strongly recommend that you use this product in conjunction with genuine **SOVOL** accessories.

SOVOL assumes no liability for any loss and/or accident (**such as malfunction or fire**) resulting from the use of non-genuine accessories with this product. Please note that any malfunction of this product caused by the use of non-genuine accessories is not covered by the product warranty; however, users may request such repairs for a fee.

FCC Statement:

This device complies with part 15 of the FCC Rules.
Operation is subject to the following two conditions:

(1) this device may not cause harmful interference, and

(2) This device must accept any interference received,including interference that may cause undesired operation.

Changes or modifications not expressly approved by the party responsible for compliance could void the user's authority to operate the equipment. This equipment has been tested and found to comply with the limits for a Class B digital device,pursuant to Part 15 of the FCC Rules. These limits are designed to provide reasonable protection against harmful interference in a residential installation. This equipment generates uses and can radiate radio frequency energy and, if not installed and used in accordance with the instructions, may cause harmful interference to radio communications. However, there is no guarantee that interference will not occur in a particular installation. If this equipment does cause harmful interference to radio or television reception, which can be determined by turning the equipment off and on, the user is encouraged to try to correct the interference by one or more of the following measures:

- - Reorient or relocate the receiving antenna.
- - Increase the separation between the equipment and receiver.
- - Connect the equipment into an outlet on a circuit different from that to which the receiver is connected.
- - Consult the dealer or an experienced radio/TV technician for help.ct.

This equipment complies with the FCC RF radiation exposure limits set forth for an uncontrolled environment. This equipment should be installed and operated with a minimum distance of 20cm between the radiator and any part of your body.

Contact

SOVOL SUPPORT

This manual is subject to change without notice.

You can find the latest version of the User Manual on the SOVOL official website.

https://www.sovol3d.com/

If you have any questions or suggestions regarding the manual, please contact us at the following email address:

Email:info@sovol3d.com/

Download the latest firmware from:

https://www.sovol3d.com/pages/download