TEST REPORT

Product Name : Atlas
Model Number : Atlas 1.0
FCC ID : 2BXKE-ATLAS1

Prepared for	:	Occam BCI Inc.
Address	:	1209 Orange Street, Wilmington, DE 19801, USA
Prepared by	:	EMTEK (DONGGUAN) CO., LTD.
Address	:	1&2/F.,Building 2, Zone A, Zhongda Marine Biotechnology Research and Development Base, No.9, Xincheng Avenue, Songshanhu High-technology Industrial Development Zone, Dongguan, Guangdong, China TEL: +86-0769-22807078 FAX: +86-0769-22807079

Report Number	:	EDG2607200271E00201R
Date of sample receipt	:	July 20, 2026
Date(s) of Tests	:	July 20, 2026 to August 10, 2026
Date of issue	:	August 11, 2026

Table of Contents

1 TEST RESULT CERTIFICATION 3
2 EUT TECHNICAL DESCRIPTION 5
3 SUMMARY OF TEST RESULT 6
4 TEST METHODOLOGY 7
4.1 GENERAL DESCRIPTION OF APPLIED STANDARDS 7
4.2 MEASUREMENT EQUIPMENT USED 7
4.3 DESCRIPTION OF TEST MODES 9
5 FACILITIES AND ACCREDITATIONS 10
5.1 FACILITIES 10
5.2 EQUIPMENT 10
5.3 LABORATORY ACCREDITATIONS AND LISTINGS 10
6 TEST SYSTEM UNCERTAINTY 11
7 SETUP OF EQUIPMENT UNDER TEST 12
7.1 RADIO FREQUENCY TEST SETUP 1 12
7.2 RADIO FREQUENCY TEST SETUP 2 12
7.3 BLOCK DIAGRAM CONFIGURATION OF TEST SYSTEM 15
7.4 SUPPORT EQUIPMENT 15
8 TEST REQUIREMENTS 16
8.1 DTS 6DB BANDWIDTH 16
8.2 DTS 99% BANDWIDTH 20
8.3 MAXIMUM CONDUCTED OUTPUT POWER 24
8.4 MAXIMUM POWER SPECTRAL DENSITY 28
8.5 UNWANTED EMISSIONS IN NON-RESTRICTED FREQUENCY BANDS 32
8.6 RADIATED SPURIOUS EMISSION 46
8.7 CONDUCTED EMISSIONS TEST 57
8.8 ANTENNA APPLICATION 60

1 TEST RESULT CERTIFICATION

Applicant	:	Occam BCI Inc.
Address	:	1209 Orange Street, Wilmington, DE 19801, USA
Manufacturer	:	Occam BCI Inc.
Address	:	1209 Orange Street, Wilmington, DE 19801, USA
Factory	:	JDI Electronics Factory
Address	:	Sima Industrial Zone, Sima Village, Chang Ping Town, Dongguan 523570, Guangdong, China
EUT	:	Atlas
Model Name	:	Atlas 1.0
Trademark	:	N/A

Measurement Procedure Used:

APPLICABLE STANDARDS	
STANDARD	**TEST RESULT**
FCC 47 CFR Part 2, Subpart J FCC 47 CFR Part 15, Subpart C	**PASS**
IC RSS-GEN, Issue 5(04-2018)+A1(03-2019)+A2(02-2021) IC RSS-247 Issue 4(07-2025)	**PASS**

The above equipment was tested by EMTEK(DONGGUAN) CO., LTD. The test data, data evaluation, test procedures, and equipment configurations shown in this report were made in accordance with the procedures given in ANSI C63.10 (2020) and the energy emitted by the sample EUT tested as described in this report is in compliance with the requirements of FCC Rules Part 2, Part 15.247, IC RSS-247 Issue 4 and IC RSS-GEN, Issue 5.

The test results of this report relate only to the tested sample identified in this report.

Date of Test : July 20, 2026 to August 10, 2026

Prepared by : Jessica Zhang /Editor

Reviewer : Warren Deng /Supervisor

Approve & Authorized Signer : Sam Lv / Manager

Modified History

Version	Report No.	Revision Date	Summary
	EDG2607200271E00201R	/	Original Report

2 EUT TECHNICAL DESCRIPTION

Characteristics	Description
Product Name:	Atlas
Model Number:	Atlas 1.0
Sample number:	E2607200271-01
Data Rate :	1Mbps, 2Mbps
Modulation:	GFSK
Operating Frequency Range:	2402-2480MHz
Number of Channels:	40 Channels
Transmit Power Max:	6.00 dBm(0.003981 W)
Antenna Type:	PCB Antenna
Antenna Gain:	-6.4 dBi
Power Supply:	DC 5V from USB DC 3.7V from battery
Product SW/HW version:	N/A
Radio SW/HW version:	N/A
Temperature Range:	0~45℃

Note: for more details, please refer to the User's manual of the EUT.

3 SUMMARY OF TEST RESULT

FCC Part Clause	IC Part Clause	Test Parameter	Verdict	Remark
15.247(a)(2)	RSS-247 6.3.1 RSS-Gen 6.7	Emission Bandwidth	PASS	
15.247(b)(3)	RSS-247 6.3.2 RSS-Gen 6.12	Maximum Peak Conducted Output Power	PASS	
15.247(e)	RSS-247 6.3.1 RSS-Gen 6.12	Maximum Power Spectral Density Level	PASS	
15.247(d)	RSS-247 6.6	Unwanted Emission Into Non-Restricted Frequency Bands	PASS	
15.247(d)	RSS-247 6.6	Unwanted Emission Into Restricted Frequency Bands (conducted)	PASS	
15.247(d) 15.209 15.205	RSS-Gen 8.9 RSS-Gen 8.10 RSS-Gen 6.13 RSS-247 6.6	Radiated Spurious Emission	PASS	
15.207	RSS-Gen 8.8	Conducted Emission Test	PASS	
15.203 15.247(b)	RSS-Gen 6.8 RSS-247 6.5	Antenna Application	PASS	
NOTE1: N/A (Not Applicable) NOTE2: According to FCC OET KDB 558074, the report use radiated measurements in the restricted frequency bands. In addition, the radiated test is also performed to ensure the emissions emanating from the device cabinet also comply with the applicable limits.				

RELATED SUBMITTAL(S)/GRANT(S):

This submittal(s) (test report) is intended for **FCC ID: 2BXKE-ATLAS1** filing to comply with Section 15.247 of the FCC Part 15, Subpart C Rules.

4 TEST METHODOLOGY

4.1 GENERAL DESCRIPTION OF APPLIED STANDARDS

According to its specifications, the EUT must comply with the requirements of the following standards:
FCC 47 CFR Part 2, Subpart J
FCC 47 CFR Part 15, Subpart C
IC RSS-GEN, Issue 5(04-2018)+A1(03-2019)+A2(02-2021)
IC RSS-247 Issue 4(07-2025)
FCC KDB 558074 D01 15.247 Meas Guidance v05r02

4.2 MEASUREMENT EQUIPMENT USED

Conducted Emission Test Equipment

Equipment	Manufacturer	Model No.	Serial No.	Last Cal.	Cal. Interval
EMI Test Receiver	Rohde&Schwarz	ESCI	100137	2026/4/23	1Year
AMN	Rohde&Schwarz	ENV216	101209	2026/4/23	1Year
AMN	Rohde&Schwarz	ENV216	100017	2026/4/23	1Year
RF Switching Unit	CDS	RSU-M2	38401	2026/4/23	1Year
AMN	Schwarzbeck	NNLK8121	8121-641	2026/4/23	1Year
AMN	Rohde&Schwarz	ESH3-Z6	101101	2026/4/23	1Year
AMN	Rohde&Schwarz	ESH3-Z6	101102	2026/4/23	1Year
Power Splitters & Dividers	Weinschel Associates	WA1506A	A1066	2026/4/23	1Year
Current Probe	FCC	F-52	8377	2026/4/23	1Year
Passive voltage probe	Rohde&Schwarz	ESH2-Z3	100122	2026/4/23	1Year
Cable	Rosenberger	RG 223/U	525178	2026/4/23	1Year
Cable	Rosenberger	RG223/U	525179	2026/4/23	1Year
Test Software	Farad	Ver.CON-03A1	--	N/A	N/A

For Spurious Emissions Test

Equipment	Manufacturer	Model No.	Serial No.	Last Cal.	Cal. Interval
EMI Test Receiver	Rohde&Schwarz	ESCI	101415	2026/4/23	1Year
Bi-log Hybrid Antenna	Schwarzbeck	VULB9163	141	2026/4/25	1Year
Pre-Amplifie	HP	8447F	OPTH64	2026/4/23	1 Year
Signal Analyzer	R&S	FSV30	103039	2026/4/23	1 Year
Horn Antenna	Schwarzbeck	BBHA9120D	1272	2026/4/25	1Year
Horn Antenna	Schwarzbeck	BBHA9170	9170-567	2026/4/25	1Year
Pre-Amplifie	LUNAR EM	PM1-18-40	J10100000081	2026/4/23	1Year
Loop antenna	Schwarzbeck	FMZB1519	1519-012	2026/4/25	1Year
Cable	Rosenberger	CIL02	A0783566	2026/4/23	1Year
Cable	HTS	CBL-26	D1245	2026/4/23	1Year
Cable	HTS	CBL-26	D8503	2026/4/23	1Year
Cable	HTS	CBL-26	/	2026/4/23	1Year
6 db attenuator	AR-WORLDWIDE	6dB/50FH-006-100	324011	2026/4/23	1Year
Test Software	Farad	Ver.RA-03A1	--	N/A	N/A

For other test items:

Equipment	Manufacturer	Model No.	Serial No.	Last Cal.	Cal. Interval
Wireless Connectivity Tester	R&S	CMW270	102543	2026/4/23	1Year
Automatic Control Unit	Tonscend	JS0806-2	21I8060480	2026/4/23	1Year
Signal Analyzer	KEYSIGHT	N9010B	MY60242456	2026/4/23	1Year
Analog Signal Generator	KEYSIGHT	N5173B	MY61252625	2026/4/23	1Year
UP/DOWN-Converter	R&S	CMW-Z800A	100274	2026/4/23	1Year
Vector Signal Generator	KEYSIGHT	N5182B	MY61252674	2026/4/23	1Year
Frequency Extender	KEYSIGHT	N5182BX07	MY59362541	2026/4/23	1Year
Temperature&Humidity test chamber	ESPEC	EL-02KA	12107166	2026/4/23	1 Year
Radio frequency test system	Tonscend	JS1120-3	--	N/A	N/A

4.3 DESCRIPTION OF TEST MODES

The EUT has been tested under its typical operating condition.
The EUT configuration for testing is installed on RF field strength measurement to meet the Commissions requirement and operating in a manner which intends to maximize its emission characteristics in a continuous normal application.

The Transmitter was operated in the normal operating mode. The TX frequency was fixed which was for the purpose of the measurements.

Test of channel included the lowest and middle and highest frequency to perform the test, then record on this report.

Those data rates (Bluetooth DTS :1Mbps, 2Mbps) were used for all test.

Pre-defined engineering program for regulatory testing used to control the EUT for staying in continuous transmitting and receiving mode is programmed.

Frequency and Channel list for Bluetooth DTS:

Channel	Frequency (MHz)	Channel	Frequency (MHz)	Channel	Frequency (MHz)
0	2402	19	2440	…	…
1	2404	20	2442	37	2476
2	2406	21	2444	38	2478
…	…	…	…	39	2480
Note: fc=2402MHz+k×2MHz k=1 to 39					

Test Frequency and channel for Bluetooth DTS:

Lowest Frequency		Middle Frequency		Highest Frequency	
Channel	Frequency (MHz)	Channel	Frequency (MHz)	Channel	Frequency (MHz)
0	2402	19	2440	39	2480

5 FACILITIES AND ACCREDITATIONS

5.1 FACILITIES

All measurement facilities used to collect the measurement data are located at:

EMTEK (DONGGUAN) CO., LTD.
1&2/F.,Building 2, Zone A, Zhongda Marine Biotechnology Research and Development Base, No.9, Xincheng Avenue, Songshanhu High-technology Industrial Development Zone, Dongguan, Guangdong, China
The sites are constructed in conformance with the requirements of ANSI C63.7, ANSI C63.4 and CISPR Publication 22.

5.2 EQUIPMENT

Radiated emissions are measured with one or more of the following types of linearly polarized antennas: tuned dipole, biconical, log periodic, bi-log, and/or ridged waveguide, horn. Spectrum analyzers with preselectors and quasi-peak detectors are used to perform radiated measurements.

Conducted emissions are measured with Line Impedance Stabilization Networks and EMI Test Receivers.

Calibrated wideband preamplifiers, coaxial cables, and coaxial attenuators are also used for making measurements.

All receiving equipment conforms to CISPR Publication 16-1, “Radio Interference Measuring Apparatus and Measurement Methods.”

5.3 LABORATORY ACCREDITATIONS AND LISTINGS

Site Description		
EMC Lab.	:	Accredited by CNAS, 2024.07.06 The certificate is valid until 2030.07.05 The Laboratory has been assessed and proved to be in compliance with CNAS/CL01:2018 The Certificate Registration Number is L3150 Accredited by FCC Designation Number: CN1451 Test Firm Registration Number: 846861 Accredited by A2LA The Certificate Registration Number is 4321.02 Accredited by Industry Canada The Certificate Registration Number is CN0113
Name of Firm	:	EMTEK (DONGGUAN) CO., LTD.
Site Location	:	1&2/F.,Building 2, Zone A, Zhongda Marine Biotechnology Research and Development Base, No.9, Xincheng Avenue, Songshanhu High-technology Industrial Development Zone, Dongguan, Guangdong, China

6 TEST SYSTEM UNCERTAINTY

The following measurement uncertainty levels have been estimated for tests performed on the apparatus:

Table 1

Test Parameter	Measurement Uncertainty
Radio Frequency	±1x10^-5
Maximum Peak Output Power Test	±1.0dB
Conducted Emissions Test	See below
Radiated Emission Test	±2.0dB
Power Density	±2.0dB
Occupied Bandwidth Test	±1.0dB
Band Edge Test	±3dB
All emission, radiated	See below
Antenna Port Emission	±3dB
Temperature	±0.5℃
Humidity	±3%

Table 2

Test Item		Uncertainty
Conducted Emission Uncertainty	:	2.08dB(9K-150KHz) 2.42dB(150K-30MHz)
Radiated Emission Uncertainty (3m Chamber)	:	3.32dB (30M~1GHz Polarize: H) 3.34dB (30M~1GHz Polarize: V) 4.98dB (1~6GHz) 5.20dB (6~18GHz)

Measurement Uncertainty for a level of Confidence of 95%

7 SETUP OF EQUIPMENT UNDER TEST

7.1 RADIO FREQUENCY TEST SETUP 1

The Bluetooth component's antenna ports(s) of the EUT are connected to the measurement instrument per an appropriate attenuator. The EUT is controlled by PC/software to emit the specified signals for the purpose of measurements.

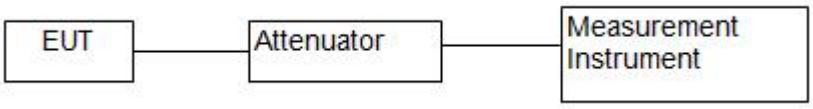

7.2 RADIO FREQUENCY TEST SETUP 2

The test site semi-anechoic chamber has met the requirement of NSA tolerance 4 dB according to the standards: ANSI C63.10. The test distance is 3m.The setup is according to the requirements in ANSI C63.10-2020 and CAN/CSA-CEI/IEC CISPR 22.
The maximal emission value is acquired by adjusting the antenna height, polarisation and turntable azimuth. Normally, the height range of antenna is 1 m to 4 m, the azimuth range of turntable is 0° to 360°, and the receive antenna has two polarizations Vertical (V) and Horizontal (H).

Below 30MHz：
The EUT is placed on a turntable 0.8 meters above the ground in the chamber, 3 meter away from the antenna (loop antenna). The Antenna should be positioned with its plane vertical at the specified distance from the EUT and rotated about its vertical axis for maximum response at each azimuth about the EUT. The center of the loop shall be 1 m above the ground. For certain applications, the loop antenna plane may also need to be positioned horizontally at the specified distance from the EUT.

Above 30MHz：
The EUT is placed on a turntable 0.8 meters above the ground in the chamber, 3 meter away from the antenna. The maximal emission value is acquired by adjusting the antenna height, polarisation and turntable azimuth. Normally, the height range of antenna is 1 m to 4 m, the azimuth range of turntable is 0° to 360°, and the receive antenna has two polarizations Vertical (V) and Horizontal (H).

Above 1GHz:
The EUT is placed on a turntable 1.5 meters above the ground in the chamber, 3 meter away from the antenna. The maximal emission value is acquired by adjusting the antenna height, polarisation and turntable azimuth. Normally, the height range of antenna is 1 m to 4 m, the azimuth range of turntable is 0° to 360°, and the receive antenna has two polarizations Vertical (V) and Horizontal (H).

Measurements shall be taken, using the following steps, at a test site that has been validated using the procedures of ANSI C63.4 or the latest CISPR 16-1-4 for measurements above 1 GHz, so as to simulate a near free-space environment (see RSS-Gen for applicable versions of ANSI and CISPR standards).
(1) Line the ground plane with absorbers between the transmitter and the receive antenna to minimize reflections. The absorbers used should have a minimum-rated attenuation of 20 dB through the measurement frequency range of interest. The absorbers shall be positioned to replicate the layout used when compliance with the applicable acceptability criterion was achieved, as set forth in the aforementioned standards on site validation.
(2) Set the height of the receive antenna to 1.5 m. The receive antenna must be one that was designed and fabricated to operate over the entire frequency range of interest, for example, an appropriate standard gain horn.
(3) The distance between the receive antenna and the radiating source shall be sufficient in order to ensure far-field conditions.
(4) Mount the transmitter at a height of 1.5 m.
(5) Configure the device under test (DUT) to produce the maximum power spectral density as measured while assessing compliance with Section 6.2.2 (i.e. channel frequency, modulation type and data rate). If the DUT is equipped with a detachable antenna and the antenna is intended for remote installation (i.e.

tower-mounted), the DUT may be substituted with a suitable signal generator. The level and frequency settings on the generator shall be set so as to reproduce the maximum power spectral density, measured within a 1 MHz bandwidth, obtained while assessing compliance to Section 6.2.2.
(6) Position the transmitter or the radiating antenna so that elevation pattern measurements can be taken.
(7) Find the 0° reference point in the horizontal plane.
(8) Care should be taken when positioning the receive antenna to avoid cross-polarization. Antennas of known mounting polarization should be assessed with the receive antenna oriented in the same polarity. If the polarization of the transmit antenna is unknown or the transmit antenna can be mounted in either polarization, e.i.r.p. measurements should be performed to find which
mounting polarity provides the highest e.i.r.p. value. Testing shall be carried out with the receive antenna and the DUT mounted in each polarity.
(9) The emission shall be centred on the display of the spectrum analyzer with the following settings:
i. If the power spectral density of the DUT was assessed with a peak detector and the antenna cannot be detached from the DUT, the spectrum analyzer shall be set to a peak detector with a resolution bandwidth and video bandwidth of 1 MHz.
ii. If the power spectral density of the DUT was assessed using a sample detector with power averaging and the antenna cannot be detached from the DUT, the spectrum analyzer shall be set to a sample detector, configured to produce 100 power averages and set with a resolution bandwidth, as well as a video bandwidth of 1 MHz.
iii. If the antenna can be detached from the DUT, a continuous wave (CW) signal equal to that of the power spectral density measurement may be used, the spectrum analyzer shall be set to peak detector with a resolution bandwidth and video bandwidth of 1 MHz.

(10) Rotate the turntable 360° recording the field strength at each step. Throughout the main beam of the antenna, the step size shall be kept to a maximum of 1°.
Once outside the main beam of the antenna, the maximum step size shall be as follows, when compared to the requirements of Section 6.2.2:
i. Between 0° and 8°, maximum step size of 2°;
ii. Between 8° and 40°, maximum step size of 4°;
iii. Between 40° and 45°, maximum step size of 1°;
iv. Between 45° and 90°, maximum step size of 5°.
Once the mask reaches 90°, the mask will be inverted and the step size will follow in the same manner as above.
For the purpose of this procedure, the main beam of the antenna is defined as the 3 dB beamwidth.
(11) Convert the measured field strength values in terms of e.i.r.p. density (dBW/1 MHz) using the following equation:

$$\text{e.i.r.p density(dBW/MHz)}=10\log((E*r)^2/30)$$

E = field strength in V/m
r = measurement distance in metres

(12) Plot the results against the emission mask with reference to the horizontal plane.
(13) Using the plot, the 0° can be rotated to determine the worst-case installation tilt angle.
(14) Testing shall be performed using the highest gain antenna for every antenna type, if applicable.
(15) Antenna type(s), antenna model number(s), and worst-case tilt angle(s) necessary to remain compliant with the elevation mask requirement set forth in Section 6.2.2(3) of RSS-247 shall be clearly indicated in the user manual.
The following figure is an example of a polar elevation mask measured using the Method 1 reference to dBμV/m at 3 m.

(a) Radiated Emission Test Set-Up, Frequency Below 30MHz

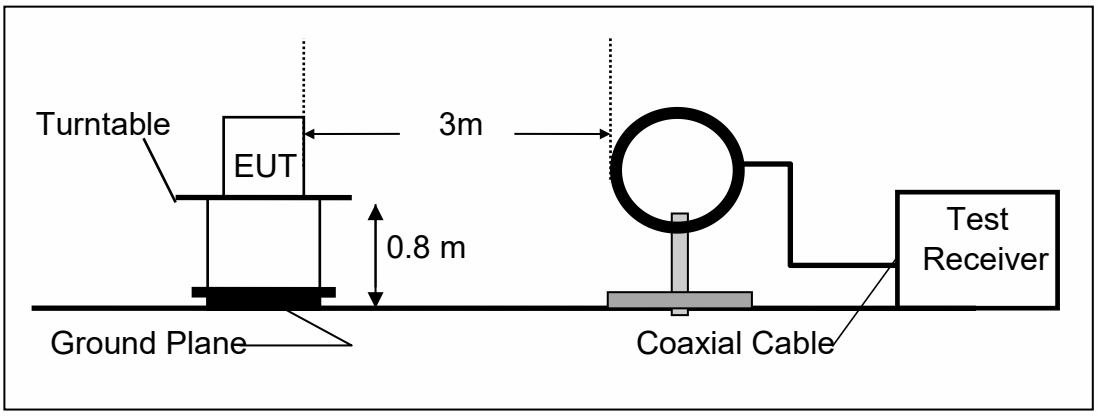

(b) Radiated Emission Test Set-Up, Frequency Below 1000MHz

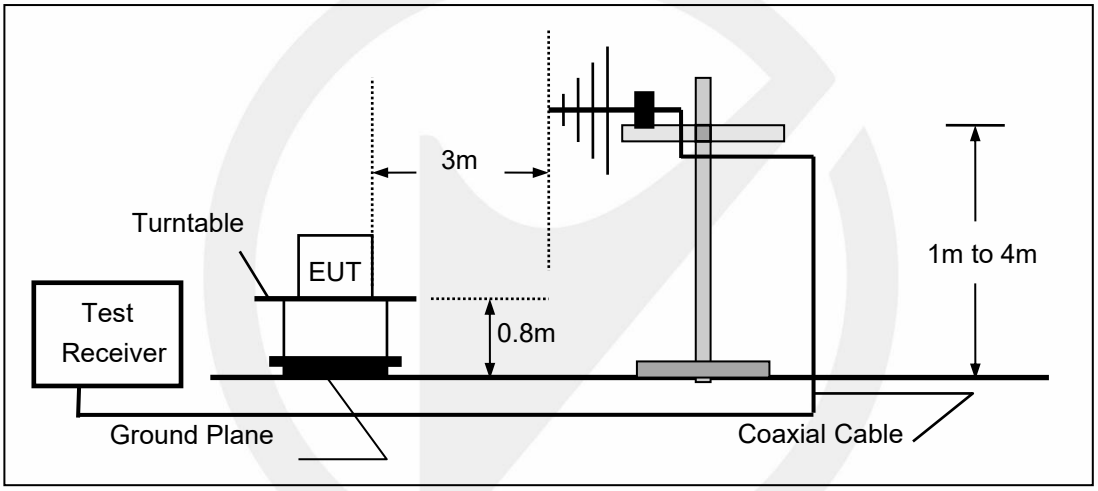

(c) Radiated Emission Test Set-Up, Frequency above 1000MHz

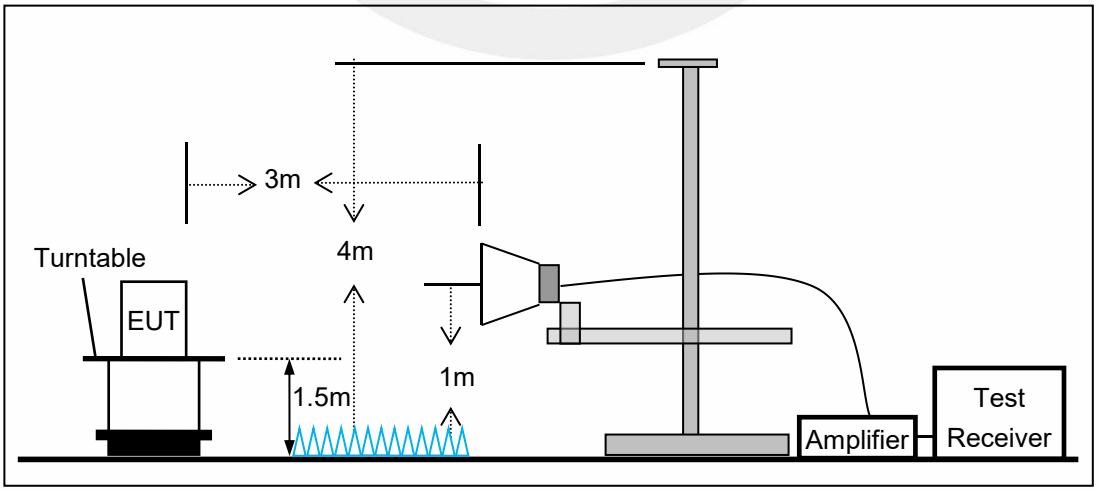

7.3 BLOCK DIAGRAM CONFIGURATION OF TEST SYSTEM

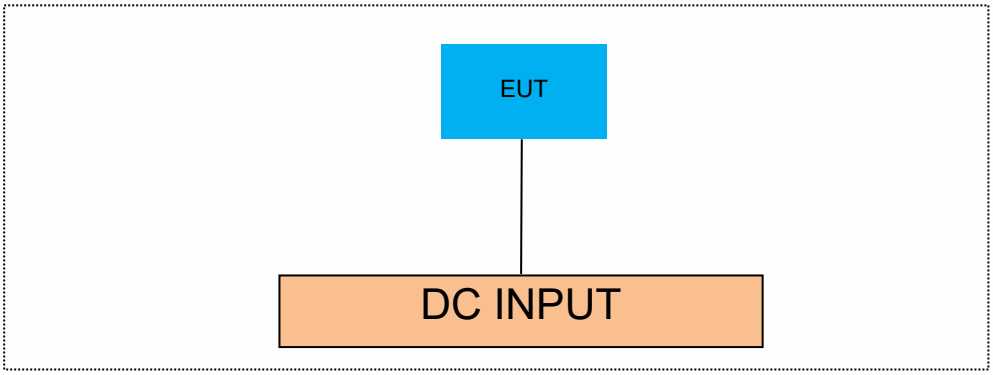

7.4 SUPPORT EQUIPMENT

EUT Cable List and Details			
Description	Manufacturer	Model	Serial Number
/	/	/	/

EUT Cable List and Details			
Cable Description	Length (m)	Shielded/Unshielded	With / Without Ferrite
/	/	/	/

Auxiliary Cable List and Details			
Cable Description	Length (m)	Shielded/Unshielded	With / Without Ferrite
/	/	/	/
/	/	/	/

Auxiliary Equipment List and Details			
Description	Manufacturer	Model	Serial Number
Notebook	Lenovo	E46L	11S168003748Z0LR06E0HG
Adaptor	Apple	/	/
/	/	/	/

Notes:

1. *All the equipment/cables were placed in the worst-case configuration to maximize the emission during the test.*
2. *Grounding was established in accordance with the manufacturer's requirements and conditions for the intended use.*

8 TEST REQUIREMENTS

8.1 DTS 6DB BANDWIDTH

8.1.1 Applicable Standard

According to FCC Part 15.247(a)(2) and KDB 558074 D01 15.247 Meas Guidance v05r02
According to RSS-247 6.3.1

8.1.2 Conformance Limit

The minimum -6 dB bandwidth shall be at least 500 kHz.

8.1.3 Test Configuration

Test according to clause 7.1 radio frequency test setup 1

8.1.4 Test Procedure

The EUT was operating in Bluetooth mode and controlled its channel. Printed out the test result from the spectrum by hard copy function.
The RF output of EUT was connected to the spectrum analyzer by RF cable and attenuator. The path loss was compensated to the results for each measurement.
Set to the maximum power setting and enable the EUT transmit continuously
Set RBW = 100 kHz.
Set the video bandwidth (VBW) =300 kHz.
Set Span=2 times OBW
Set Detector = Peak.
Set Trace mode = max hold.
Set Sweep = auto couple.
Allow the trace to stabilize.
Measure the maximum width of the emission that is constrained by the frequencies associated with the two outermost amplitude points (upper and lower frequencies) that are attenuated by 6 dB relative to the maximum level measured in the fundamental emission.
Measure and record the results in the test report.

Test Results

Temperature:	25˚C
Relative Humidity:	45%
ATM Pressure:	1011 mbar

Note: N/A

TestMode	Antenna	Frequency[MHz]	DTS BW [MHz]	FL[MHz]	FH[MHz]	Limit[MHz]	Verdict
BLE_1M	Ant1	2402	0.684	2401.620	2402.304	0.5	PASS
BLE_1M	Ant1	2440	0.668	2439.632	2440.300	0.5	PASS
BLE_1M	Ant1	2480	0.660	2479.632	2480.292	0.5	PASS
BLE_2M	Ant1	2402	1.368	2401.272	2402.640	0.5	PASS
BLE_2M	Ant1	2440	1.368	2439.280	2440.648	0.5	PASS
BLE_2M	Ant1	2480	1.368	2479.272	2480.640	0.5	PASS

BLE_1M-Ant1-2402-PASS

BLE_1M-Ant1-2440-PASS

BLE_1M-Ant1-2480-PASS

BLE_2M-Ant1-2402-PASS

BLE_2M-Ant1-2440-PASS

BLE_2M-Ant1-2480-PASS

8.2 DTS 99% BANDWIDTH

8.2.1 Applicable Standard

According to RSS-Gen 6.7 and KDB 558074 D01 DTS Meas Guidance v05r02

8.2.2 Test Configuration

Test according to clause 7.1 radio frequency test setup 1

8.2.3 Test Procedure

The EUT was operating in Bluetooth mode and controlled its channel. Printed out the test result from the spectrum by hard copy function.
The RF output of EUT was connected to the spectrum analyzer by RF cable and attenuator. The path loss was compensated to the results for each measurement.
Set to the maximum power setting and enable the EUT transmit continuously
Set RBW = 1%-5% OBW(43 KHz).
Set the video bandwidth (VBW) =130 kHz.
Set Span=4 MHz
Set Detector = Peak.
Set Trace mode = max hold.
Set Sweep = auto couple.
Allow the trace to stabilize.
Use the 99 % power bandwidth function of the instrument
Measure the maximum width of the emission.
Measure and record the results in the test report.

8.2.4 Test Results

Temperature:	25˚C
Relative Humidity:	45%
ATM Pressure:	1011 mbar

Note: N/A

TestMode	Antenna	Frequency[MHz]	OCB [MHz]	FL[MHz]	FH[MHz]	Limit[MHz]	Verdict
BLE_1M	Ant1	2402	1.0187	2401.4548	2402.4735	---	---
BLE_1M	Ant1	2440	1.0172	2439.4562	2440.4734	---	---
BLE_1M	Ant1	2480	1.0185	2479.4527	2480.4712	---	---
BLE_2M	Ant1	2402	2.0381	2400.9562	2402.9943	---	---
BLE_2M	Ant1	2440	2.0435	2438.9571	2441.0006	---	---
BLE_2M	Ant1	2480	2.0383	2478.9579	2480.9962	---	---

BLE_1M-Ant1-2402

BLE_1M-Ant1-2440

BLE_1M-Ant1-2480

BLE_2M-Ant1-2402

BLE_2M-Ant1-2440

BLE_2M-Ant1-2480

8.3 MAXIMUM CONDUCTED OUTPUT POWER

8.3.1 Applicable Standard

According to FCC Part 15.247(b)(3) and KDB 558074 D01 15.247 Meas Guidance v05r02
According to RSS-247 6.3.2 and RSS-Gen 6.12

8.3.2 Conformance Limit

The maximum peak conducted output power of the intentional radiator for systems using digital modulation in the 2400 - 2483.5 MHz bands shall not exceed: 1 Watt (30 dBm), and the e.i.r.p. shall not exceed 4 W(36 dBm)

8.3.3 Test Configuration

Test according to clause 7.1 radio frequency test setup 1

8.3.4 Test Procedure

As an alternative to a peak power measurement, compliance with the one Watt limit can be based on a measurement of the maximum conducted output power. For smart system, Maximum Conducted Output Power is defined as the total transmit power delivered to all antennas and antenna elements averaged across all symbols in the signaling alphabet when the transmitter is operating at its maximum power control level. Power must be summed across all antennas and antenna elements. If multiple modes of operation are possible (e.g., alternative modulation methods), the maximum conducted output power is the highest total transmit power occurring in any mode.
Set the RBW ≧DTS bandwidth(about 2MHz).
Set VBW =3*RBW(about 6MHz)
Set the span ≧3*RBW
Set Sweep time = auto couple.
Set Detector = peak.
Set Trace mode = max hold.
Allow trace to fully stabilize. Use peak marker function to determine the peak amplitude level.

Conducted output power limit specified in paragraph (b) of this section is based on the use of antennas with directional gains that do not exceed 6 dBi. If transmitting antennas of directional gain greater than 6 dBi are used, the conducted output power from the intentional radiator shall be reduced below the stated values in paragraphs (b)(3) of this section, as appropriate, by the amount in dB that the directional gain of the antenna exceeds 6 dBi.

8.3.5 Test Results

Temperature:	25 ˚C
Relative Humidity:	45%
ATM Pressure:	1011 mbar

TestMode	Antenna	Frequency[MHz]	Conducted Peak Powert[dBm]	Conducted Limit[dBm]	EIRP[dBm]	EIRP Limit[dBm]	Verdict
BLE_1M	Ant1	2402	5.12	≤30	-1.28	≤36	PASS
BLE_1M	Ant1	2440	5.40	≤30	-1	≤36	PASS
BLE_1M	Ant1	2480	6.00	≤30	-0.4	≤36	PASS
BLE_2M	Ant1	2402	5.22	≤30	-1.18	≤36	PASS
BLE_2M	Ant1	2440	5.45	≤30	-0.95	≤36	PASS
BLE_2M	Ant1	2480	5.96	≤30	-0.44	≤36	PASS

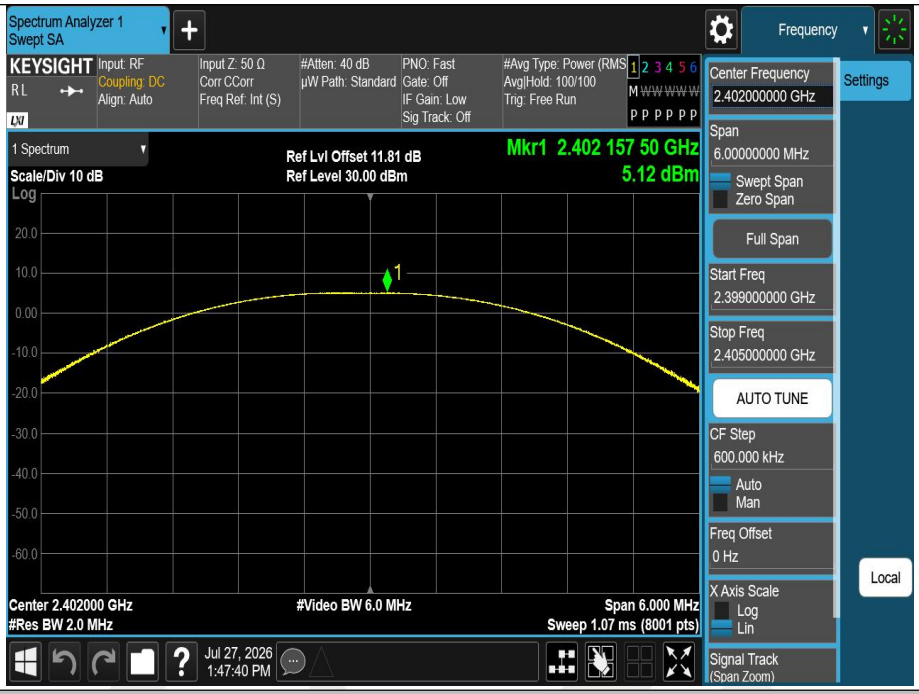

BLE_1M-Ant1-2402-PASS

BLE_1M-Ant1-2440-PASS

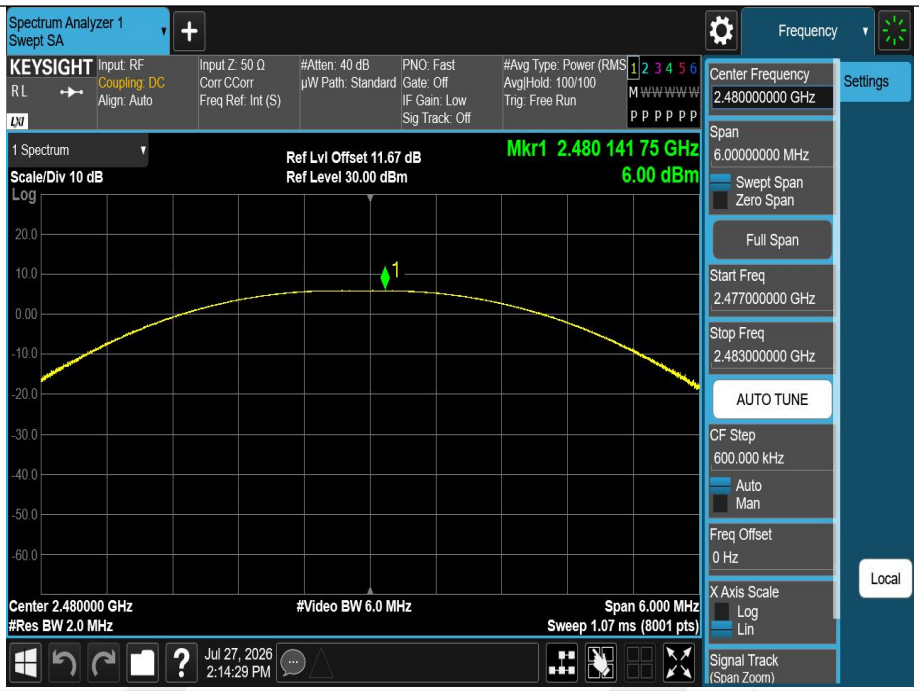

BLE_1M-Ant1-2480-PASS

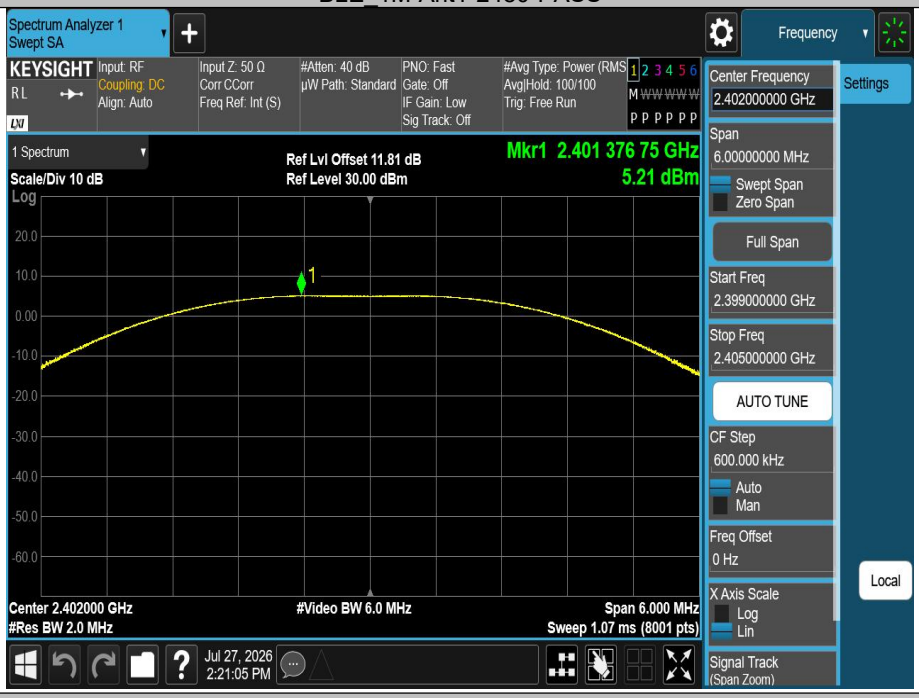

BLE_2M-Ant1-2402-PASS

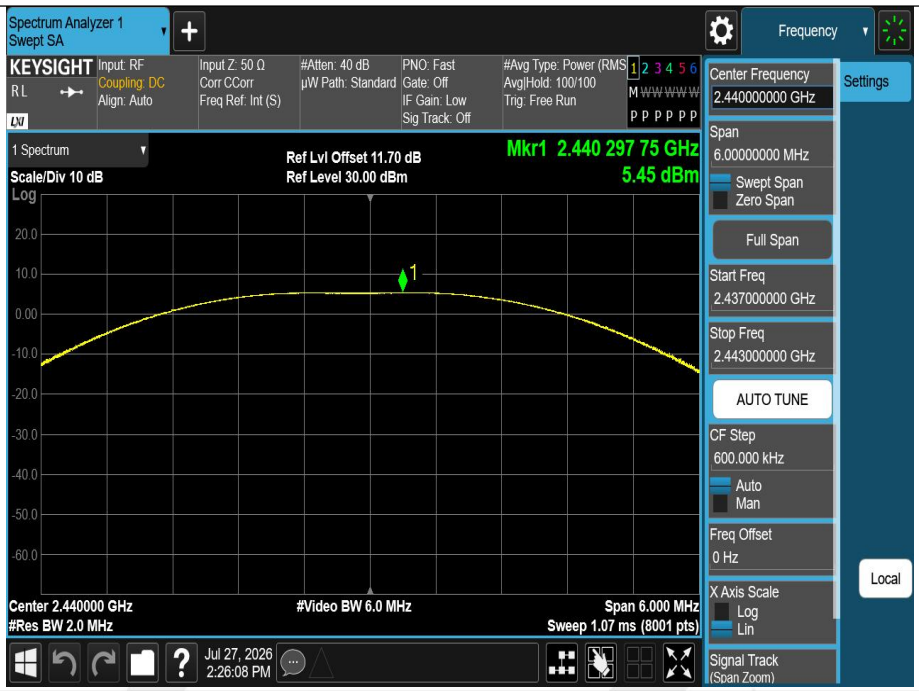

BLE_2M-Ant1-2440-PASS

BLE_2M-Ant1-2480-PASS

8.4 MAXIMUM POWER SPECTRAL DENSITY

8.4.1 Applicable Standard

According to FCC Part 15.247(e) and KDB 558074 D01 15.247 Meas Guidance v05r02
According to RSS-247 6.3.1 and RSS-Gen 6.12

8.4.2 Conformance Limit

The transmitter power spectral density conducted from the transmitter to the antenna shall not be greater than 8 dBm in any 3 kHz band during any time interval of continuous transmission.

8.4.3 Test Configuration

Test according to clause 7.1 radio frequency test setup 1

8.4.4 Test Procedure

This procedure shall be used if maximum peak conducted output power was used to demonstrate compliance
The transmitter output (antenna port) was connected to the spectrum analyzer
Set analyzer center frequency to DTS channel center frequency.
Set the span to 1.5 times the DTS bandwidth.
Set the RBW to: 3 kHz
Set the VBW to: 10 kHz.
Set Detector = peak.
Set Sweep time = auto couple.
Set Trace mode = max hold.
Allow trace to fully stabilize.
Use the peak marker function to determine the maximum amplitude level within the RBW.

8.4.5 Test Results

Temperature:	25 ˚C
Relative Humidity:	45%
ATM Pressure:	1011 mbar

Note: N/A

TestMode	Antenna	Frequency[MHz]	Result[dBm/3kHz]	Limit[dBm/3kHz]	Verdict
BLE_1M	Ant1	2402	-11.29	≤8.00	PASS
BLE_1M	Ant1	2440	-11.03	≤8.00	PASS
BLE_1M	Ant1	2480	-10.45	≤8.00	PASS
BLE_2M	Ant1	2402	-17.58	≤8.00	PASS
BLE_2M	Ant1	2440	-17.28	≤8.00	PASS
BLE_2M	Ant1	2480	-16.81	≤8.00	PASS

BLE_1M-Ant1-2402-PASS

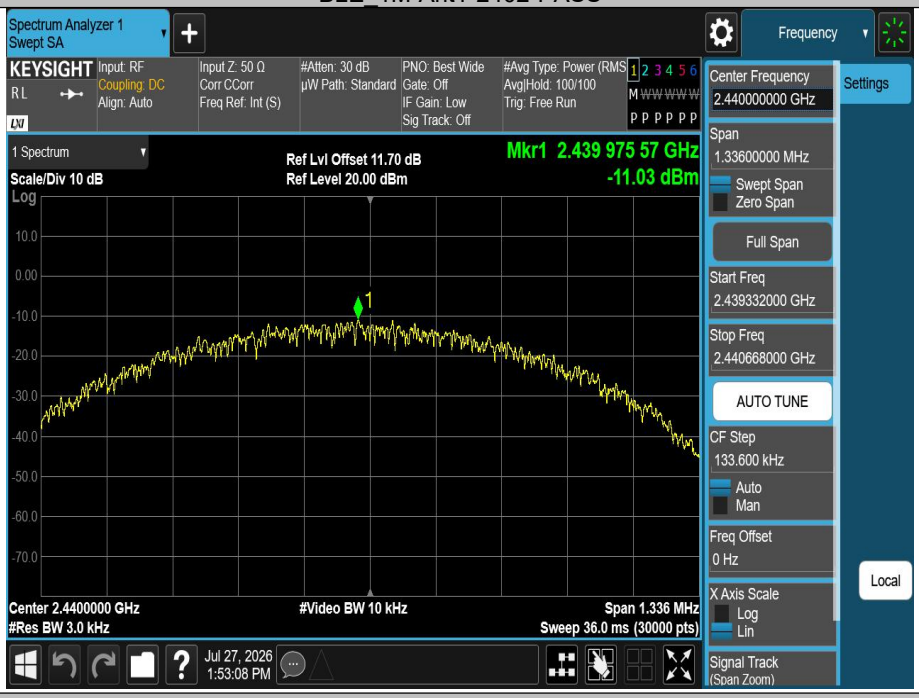

BLE_1M-Ant1-2440-PASS

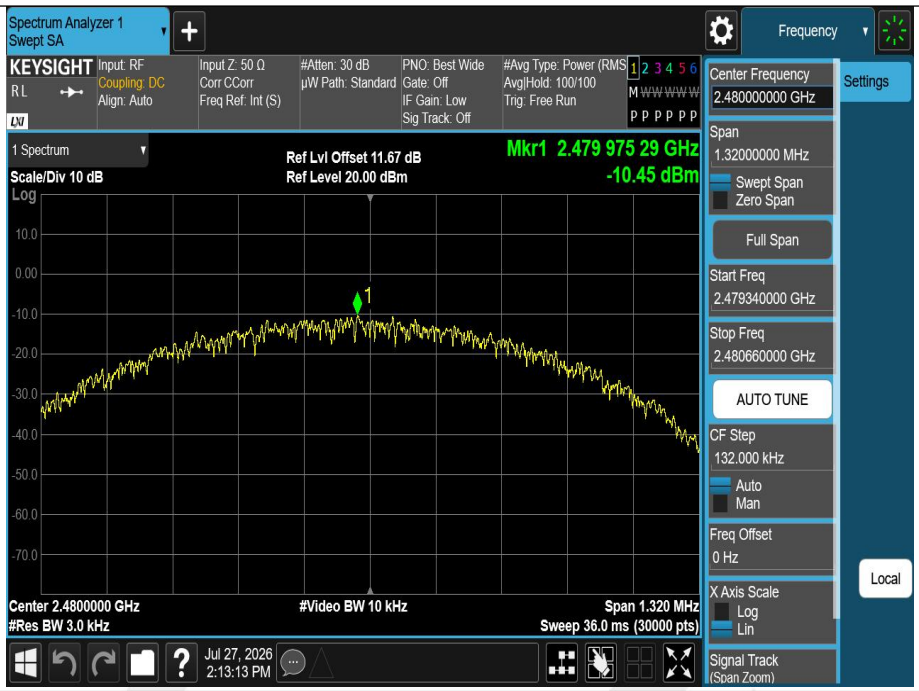

BLE_1M-Ant1-2480-PASS

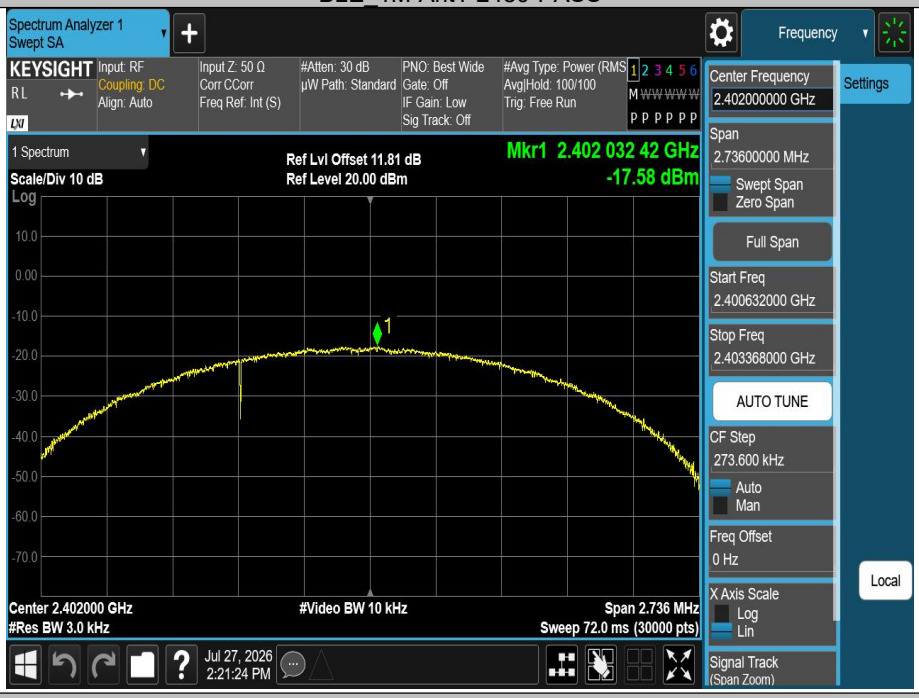

BLE_2M-Ant1-2402-PASS