OTA TEST REPORT

Applicant	Espressif System (Shanghai) Co.,Ltd
Product	ESP32-S3-WROOM-1
Model	ESP-ANT B
Report No.	Y2102A0260-T3
Issue Date	March 9, 2021

TA Technology (Shanghai) Co., Ltd. tested the above equipment in accordance with the requirements in **ANSI/IEEE Std 149-2008.** The test results show that the equipment tested is capable of demonstrating compliance with the requirements as documented in this report.

Peng Tao

Prepared by: Peng Tao

Kai Xu

Approved by: Kai Xu

TA Technology (Shanghai) Co., Ltd.

No.145, Jintang Rd, Tangzhen Industry Park, Pudong Shanghai, China
TEL: +86-021-50791141/2/3
FAX: +86-021-50791141/2/3-8000

TABLE OF CONTENTS

1. Test Laboratory 3
1.1. Notes of the Test Report 3
1.2. Test facility 3
1.3. Testing Location 3
1.4. Laboratory Environment 4
2. General Description of Equipment under Test 5
2.1. Applicant and Manufacturer Information 5
2.2. General information 5
2.3. Test Date 5
2.4. Receiving Date 5
2.5. Applied Standards 6
3. Test Conditions 7
3.1. Test Configuration 7
3.2. Test Measurement 7
4. Test Results 8
4.1. Gain and Efficiency 8
5. Equipment List 9
ANNEX A 3-D Pattern Plots 10
ANNEX B：The EUT Appearance and Test Configuration 12
B.1 EUT Appearance 12
B.2 Test Configuration 13

This report shall not be reproduced except in full, without the written approval of TA Technology (Shanghai) Co., Ltd.

1. Test Laboratory

1.1. Notes of the Test Report

This report shall not be reproduced in full or partial, without the written approval of **TA technology (shanghai) co., Ltd.** The results documented in this report apply only to the tested sample, under the conditions and modes of operation as described herein .Measurement Uncertainties were not taken into account and are published for informational purposes only. This report is written to support regulatory compliance of the applicable standards stated above.

1.2. Test facility

A2LA (Certificate Number: 3857.01)

TA Technology (Shanghai) Co., Ltd. has been listed by American Association for Laboratory Accreditation to perform measurement.

1.3. Testing Location

Company:	TA Technology (Shanghai) Co., Ltd.
Address:	No.145, Jintang Rd, Tangzhen Industry Park, Pudong Shanghai, China
City:	Shanghai
Post code:	201201
Country:	P. R. China
Contact:	Xu Kai
Telephone:	+86-021-50791141/2/3
Fax:	+86-021-50791141/2/3-8000
Website:	http://www.ta-shanghai.com
E-mail:	xukai@ta-shanghai.com

This report shall not be reproduced except in full, without the written approval of TA Technology (Shanghai) Co., Ltd.

1.4. Laboratory Environment

Temperature	Min. =19℃，Max. = 25℃	
Relative humidity	Min. =40%，Max. =72%	
Shield effect	0.7-6GHz	> 100dB
Ground resistance	<0.5Ω	

This report shall not be reproduced except in full, without the written approval of TA Technology (Shanghai) Co., Ltd.

2. General Description of Equipment under Test

2.1. Applicant and Manufacturer Information

Applicant Name	Espressif System (Shanghai) Co.,Ltd
Applicant address	Suite 204 Block 2, 690 Bibo Road, Zhang Jiang Hi-Tech Park, Shanghai, China
Manufacturer Name	Espressif System (Shanghai) Co.,Ltd
Manufacturer address	Suite 204 Block 2, 690 Bibo Road, Zhang Jiang Hi-Tech Park, Shanghai, China

2.2. General information

EUT Description	
Product Name:	ESP32-S3-WROOM-1
Model	ESP-ANT B
HW Version:	ESP32-S3-WROOM-1 V1
SW Version:	esp32c3_phy_20210225_no_sleep_and_ampdu
Antenna Type:	PCB Antenna
Antenna Manufacturer:	Espressif System (Shanghai) Co.,Ltd
Test Frequency:	2402MHz ~ 2502MHz
Note: The EUT is sent from the applicant to TA and the information of the EUT is declared by the applicant. All indications of Pass/Fail in this report are opinions expressed by TA Technology (Shanghai) Co., Ltd. based on interpretations and/or observations of test results. Measurement Uncertainties were not taken into account and are published for informational purposes only.	

Test lab. of the antenna gain and radiation pattern measurement: TA Technology (Shanghai) Co., Ltd.

2.3. Test Date

The test is performed from February 25, 2021 to March 4, 2021.

2.4. Receiving Date

The sample was received on February 25, 2021.

This report shall not be reproduced except in full, without the written approval of TA Technology (Shanghai) Co., Ltd.

2.5. Applied Standards

According to the specifications of the manufacturer, it must comply with the requirements of the following standards:

Test Method: **ANSI/IEEE Std 149-2008**

This report shall not be reproduced except in full, without the written approval of TA Technology (Shanghai) Co., Ltd.

3. Test Conditions

3.1. Test Configuration

Great-Circle-Cut method is used to measure the antenna 3D GAIN of EUT in OTA qualified anechoic chamber. Equipment Under Test (EUT) geometry centre vertical projection at the centre of platform, the distance from EUT to measurement antenna is 5m.

3.2. Test Measurement

Spherical coordinate system

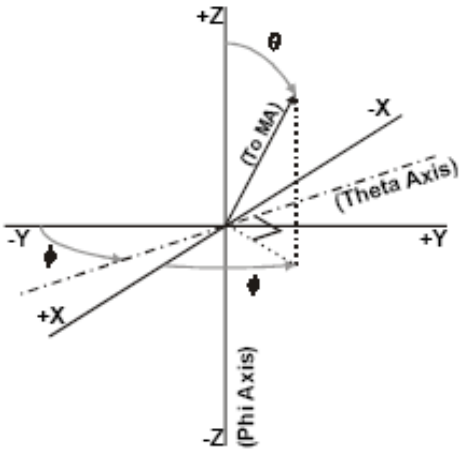

Figure 1 Test coordinate system

Note: Theta is from 0~180 degree. Phi is from 0~360. Rotate the EUT and record the Data, the step of rotation is 15 degree.

Test Setup

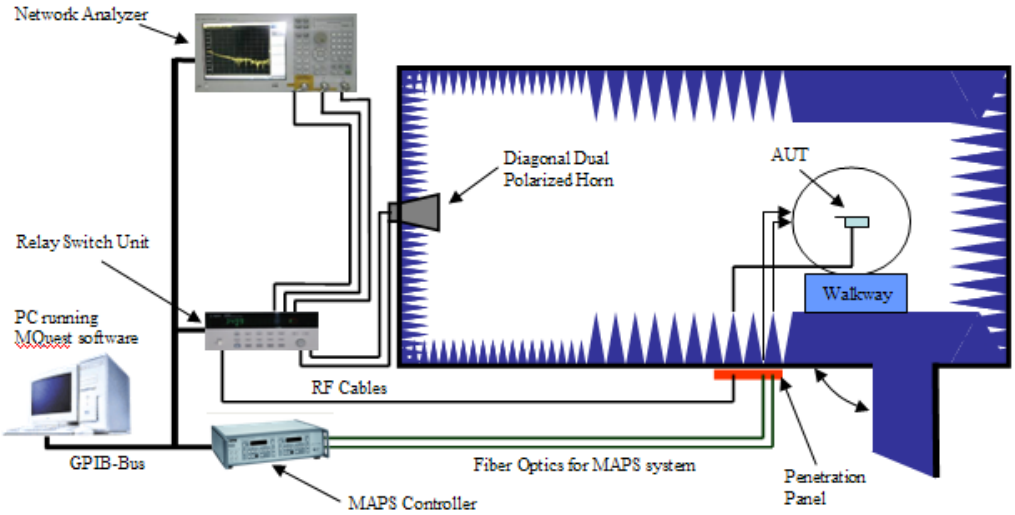

This report shall not be reproduced except in full, without the written approval of TA Technology (Shanghai) Co., Ltd.

4. Test Results

4.1. Gain and Efficiency

Model	Test State	Frequency (MHz)	Efficiency (dB)	Efficiency (%)	Gain (dBi)	Directivity (dBi)	Note
ESP-ANT B	Free Space	2402	-1.98	63.44	2.73	4.70	15°
		2407	-1.76	66.66	2.73	4.50	
		2412	-1.70	67.68	3.16	4.85	
		2417	-1.60	69.11	2.92	4.53	
		2422	-1.61	68.95	2.79	4.41	
		2427	-1.77	66.48	2.29	4.06	
		2432	-1.83	65.54	2.54	4.37	
		2437	-1.73	67.21	2.46	4.19	
		2442	-1.77	66.46	2.56	4.34	
		2447	-1.79	66.25	2.69	4.48	
		2452	-1.75	66.81	2.95	4.70	
		2457	-1.76	66.73	2.96	4.71	
		2462	-1.68	67.91	2.99	4.67	
		2467	-1.95	63.90	3.17	5.11	
		2472	-2.07	62.14	3.08	5.14	
		2477	-1.87	65.00	3.18	5.05	
		2482	-1.94	63.96	3.26	5.20	
		2487	-1.98	63.35	3.37	5.35	
		2492	-1.82	65.80	3.35	5.17	
		2497	-1.72	67.34	3.17	4.88	
		2502	-1.75	66.79	3.18	4.94	

This report shall not be reproduced except in full, without the written approval of TA Technology (Shanghai) Co., Ltd.

5. Equipment List

Type of Equipment	Manufacture	Model Number	S/N	Calibration Date	Expiration Time
Network Analyzer	Key sight	E5071B	MY42404014	2020-05-17	2021-05-16
Switch Control System	ETS	7006/7001	00059957/MY 42001152	N/A	N/A
Dual polarized horn antenna	ETS	3164-04	00062743	2020-04-14	2021-04-13
Software	ETS-lindgren	EMQ-100 Pattern Measurement software	1.09	N/A	N/A

This report shall not be reproduced except in full, without the written approval of TA Technology (Shanghai) Co., Ltd.

ANNEX A 3-D Pattern Plots

Total

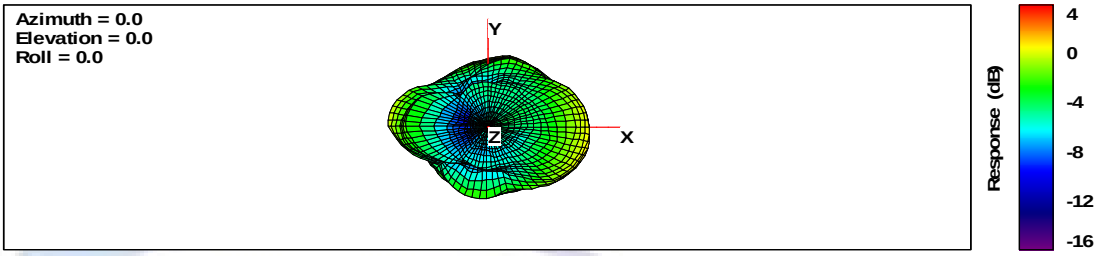

Total

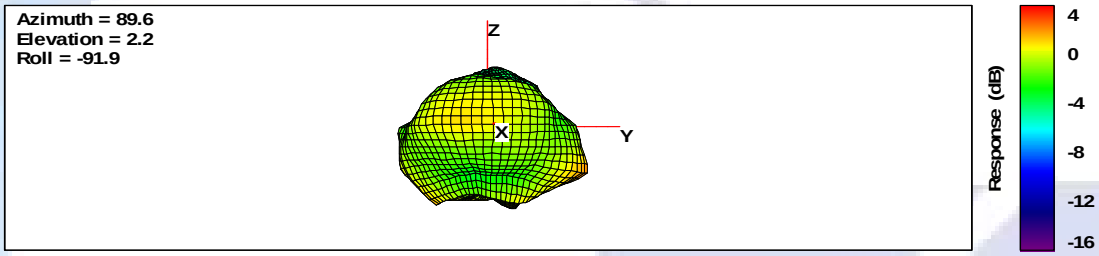

Total

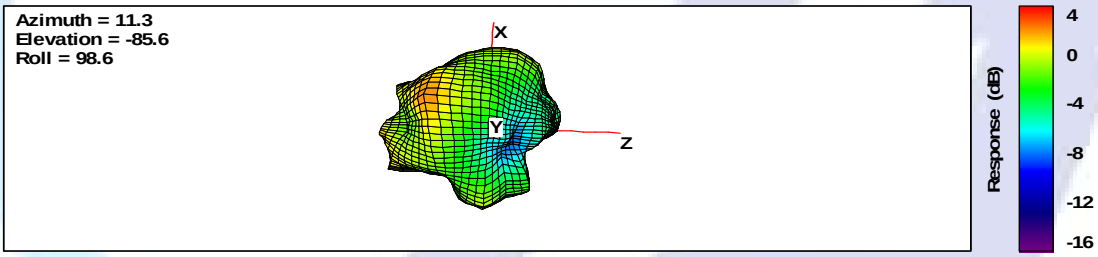

Total

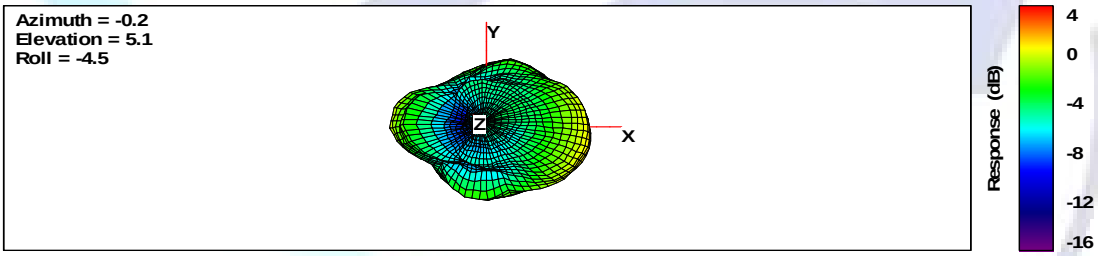

Cut1

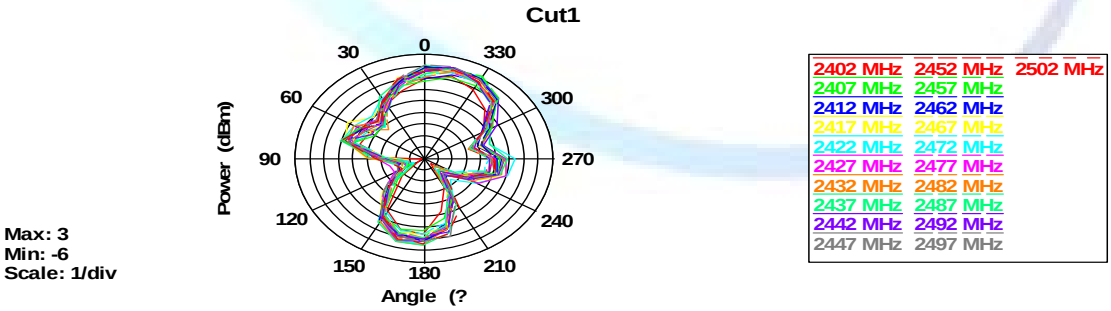

This report shall not be reproduced except in full, without the written approval of TA Technology (Shanghai) Co., Ltd.

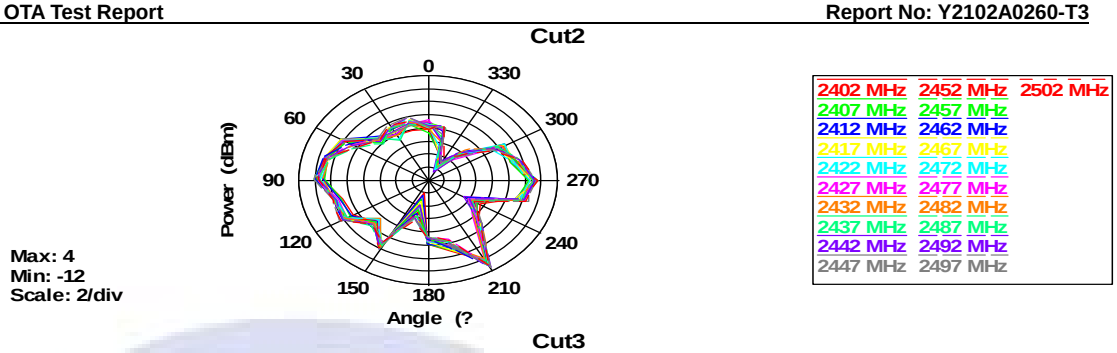

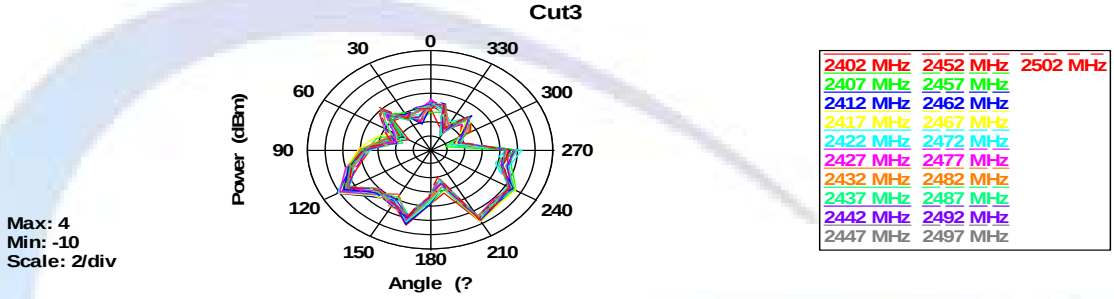

2402MHz ~2502 MHz Wi-Fi 2.4G 3D Gain

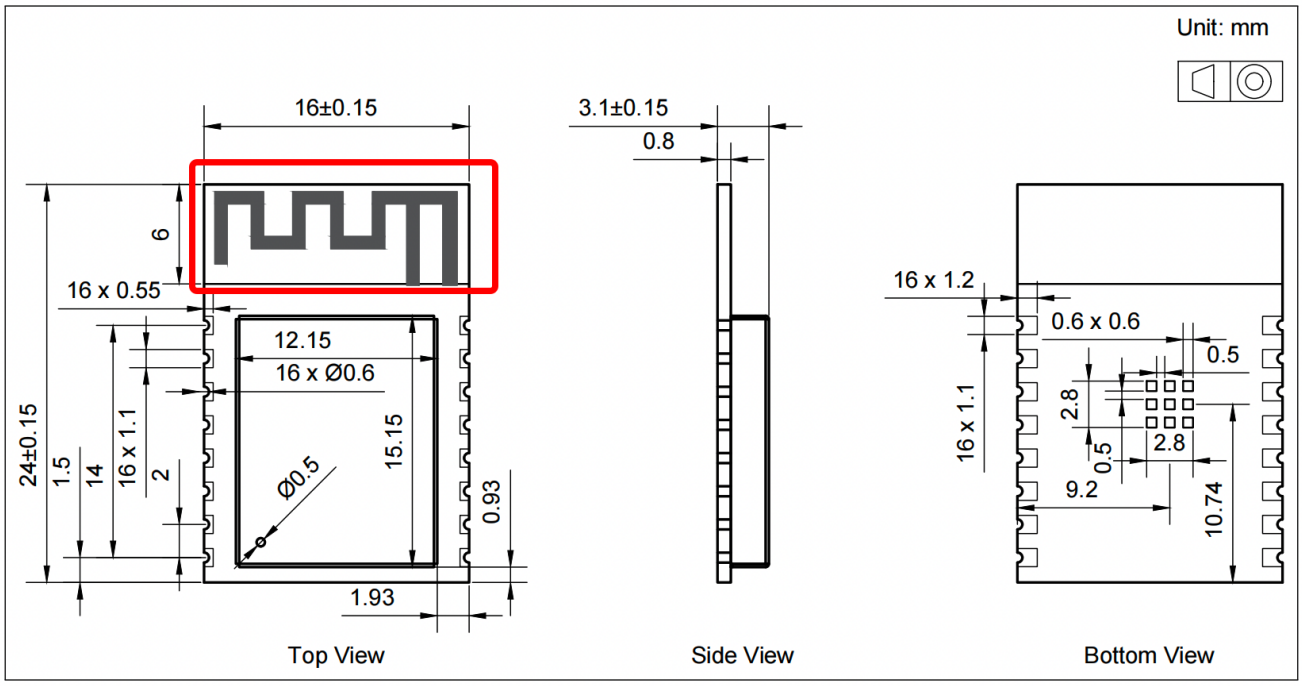

This report shall not be reproduced except in full, without the written approval of TA Technology (Shanghai) Co., Ltd.