Meimeng Smart

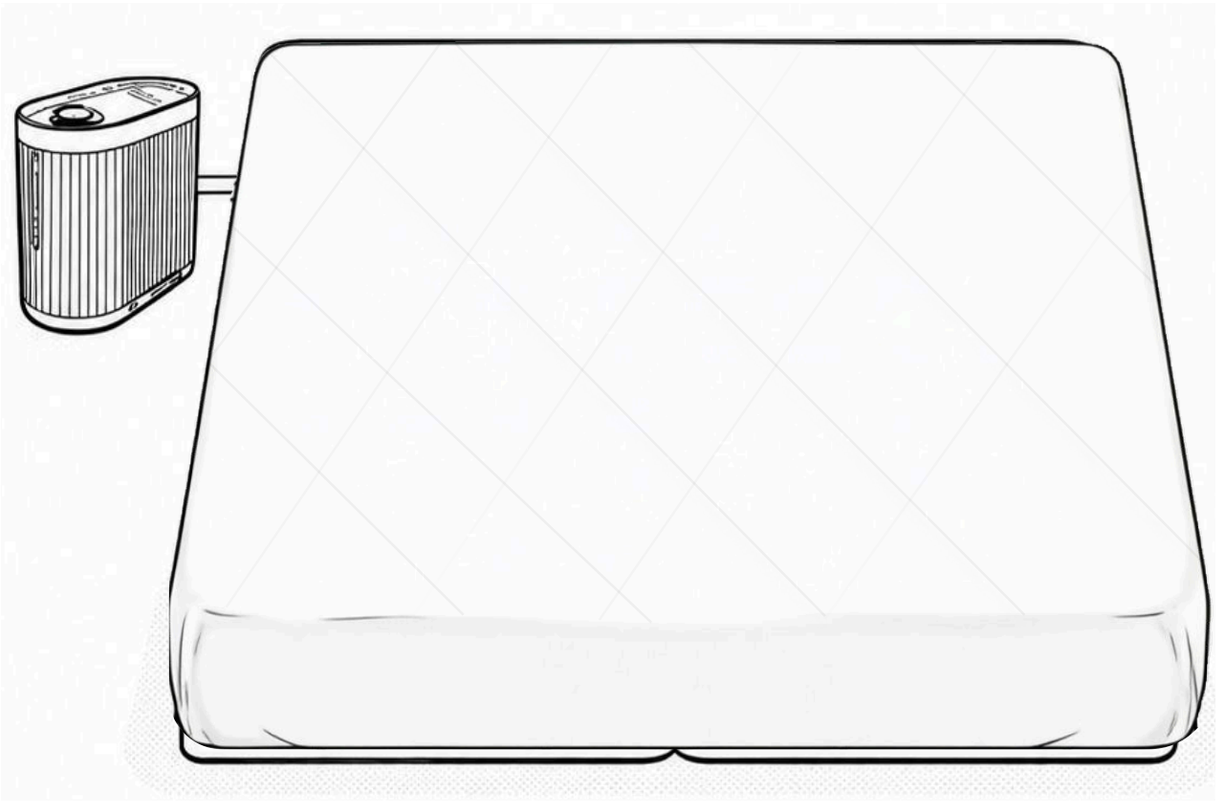

Smart Sleep Temperature-Controlled Mattress Pad

User Manual

Smart Temperature Control | Precise Adjustment | Safe & Reliable | Easy Operation

Please read this manual carefully before use and keep it properly.

Table of Contents

1.Product Overview……..…02

2.Product Models……..…04

3.Installation Instructions……...…04

4.Smart Main Unit Operation Steps……...06

5.APP Operation Guide……06

6.Safety Precautions……13

7.Warranty Information……14

8.Contact Information……...15

I.Product Overview

The smart sleep temperature control system is designed for high-quality sleep, with precision temperature control and personalized experience at its core.

1、Packing List

Smart Mattress Cover

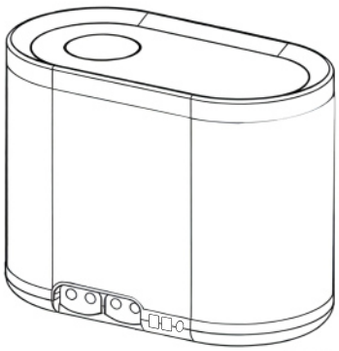

Smart Main Unit

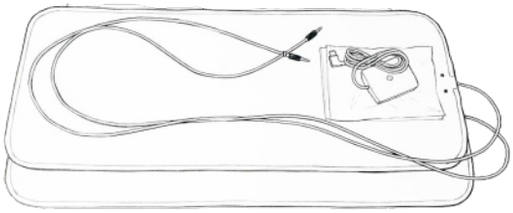

Heart Rate Monitoring Band
(Standard with AI Version)

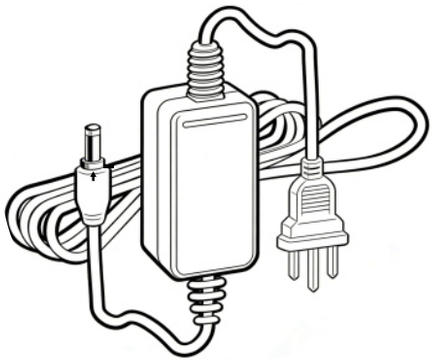

Power Adapter

⚠Safety Notice:

Please use only the dedicated adapter included with this product. Do not use any other adapters.

2、Main Unit Control Panel Operation Instructions

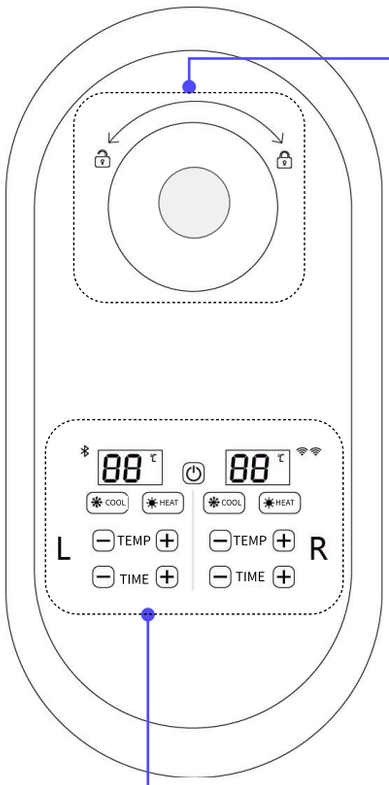

Water Injection Port (Fill up to the maximum water level line only)

Max Water Level

Mini Water Level

The same applies to both left and right sides of the bed.

1.Power On: After connecting power, press the central power button to turn on the display.

2.Select Zone: The L (Left) and R (Right) zones operate independently and can be set separately.

3.Switch Mode: Press the Cool/Heat button for the corresponding zone to activate the desired mode.

Cooling Heating

4.Adjust Temperature: Press the Temperature +/– buttons to set the target temperature.

5.Set Runtime: Press the Runtime +/– buttons to set the operating timer. (Maximum runtime: 12 hours)

6.Power Off: Press the Power button to shut down the entire unit.

7.Note: When the device is turned off via the Mini Program / App, it will delay shutdown for 2—3 minutes to protect the device.

Control Panel

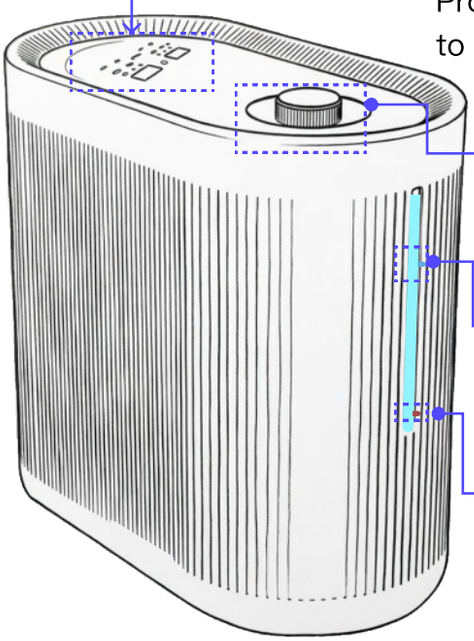

Water Injection Port

Max Water Level
Note: It is recommended to add water to the marked scale to avoid overfilling.

Mini Water Level
Note: If the water level is below the minimum scale, please add water in time.

II.Product Models

WH01 Model (Smart Version)

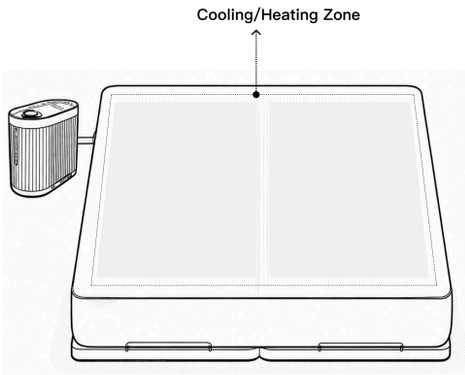

WH02 Model - Upgraded AI Version

(with Sleep Monitoring Pads)

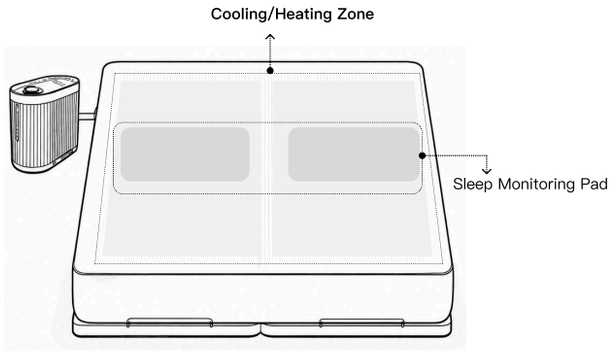

III.Installation Instructions

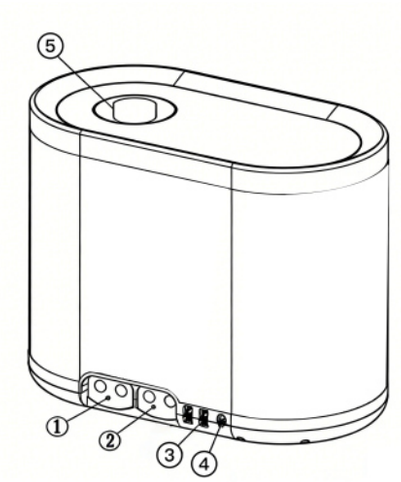

① Right Mattress Water Pipe Port

② Left Mattress Water Pipe Port

③ Heart Rate Monitor (AI Version Only)

④ DC Power Port

⑤ Water Filling Port

Temperature Control Main Unit Interface Diagram

Step 1

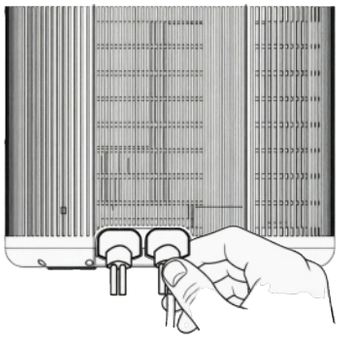

1. Device Water Pipe Installation

Insert the plugs of the smart mattress cover into the corresponding ports on the temperature control main unit.

Step 2

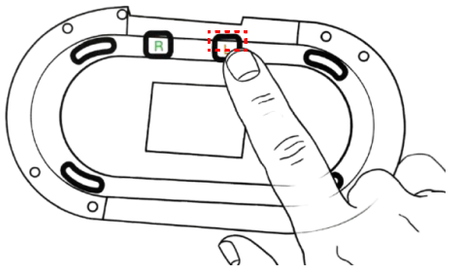

2.Water Pipe Removal

To remove the water hose: Press the release button on the device bottom (push backward) to pop the hose out automatically. If stuck, hold the button and pull the smart mattress cover hose outward.

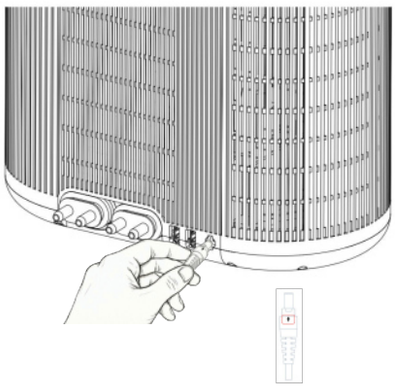

3.Install the Power Adapter

The adapter plug features a twist-lock design: insert the plug with the triangular arrow facing upward, then turn it 90° clockwise to lock it in place. To unlock, turn it 90° counterclockwise. This ensures a secure connection and safe removal.

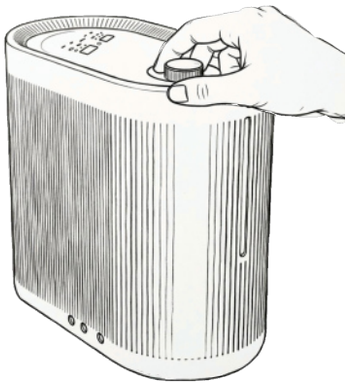

4.Water Filling Cap Operation

To unscrew the cap: Grip the water filling cap and rotate it counterclockwise to remove it.

To fill water: After unscrewing the cap, pour distilled water or purified water into the water tank.

To reinstall the cap: After filling, align the cap with the water filling port and rotate it clockwise to tighten it securely, ensuring a watertight seal.

IV. Smart Main Unit Operation Steps

Step 1: Power on the device first.

Step 2: Place the main unit at a position no lower than the mattress. Connect the main unit to the smart mattress cover, then fill the device with water up to the MAX water level (approx. 1.25L). Do NOT close the cap yet.

Step 3: After connecting the device water pipes, power on the device and start the operation mode.

Step 4: When the water level drops to the MIN water level, refill water up to the MAX water level again.

Step 5: Screw the cap back on. The device is now ready for normal operation.

V. APP Operation Process

1. Andriod APP:https://www.pgyer.com/Jsv814EQ

2.Email register

1.Device Binding

After entering the homepage, tap 「Go to Connect」 to access the device connection interface. Tap 「Refresh」 to search for Bluetooth devices. Select the corresponding device’s Bluetooth serial number from the nearby device list, then tap the device name to complete the connection. A "✓" mark will appear once the connection is successful.

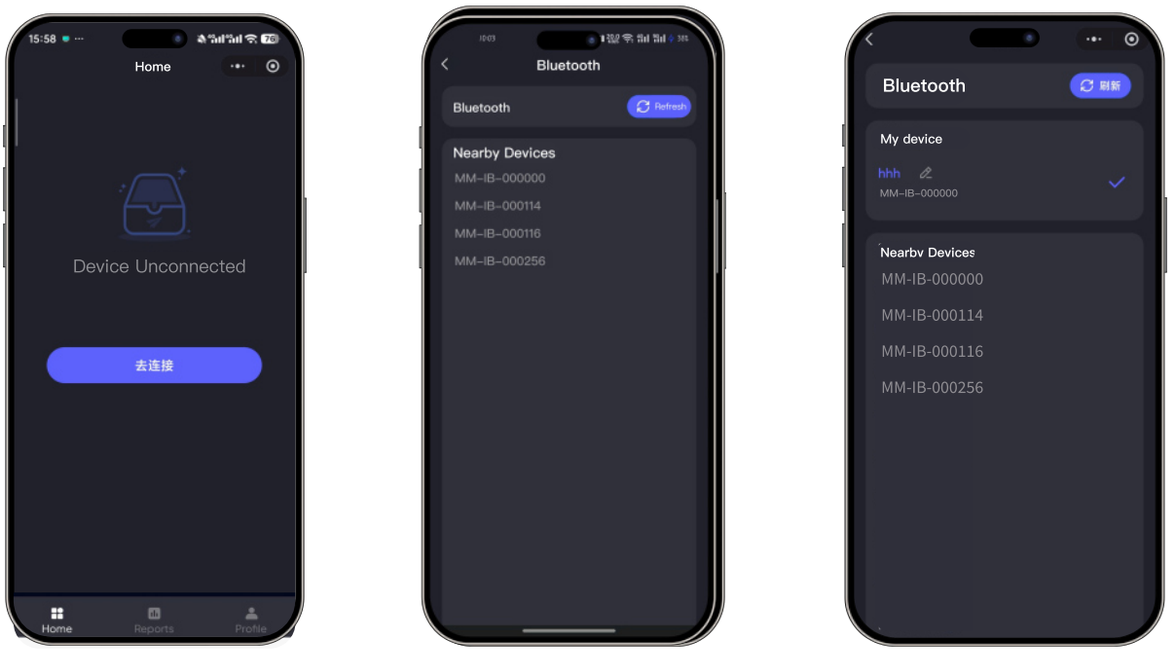

2.Tap the Bluetooth icon on the home page to start pairing. Enter your password, and you’re connected when the pairing succeeds.

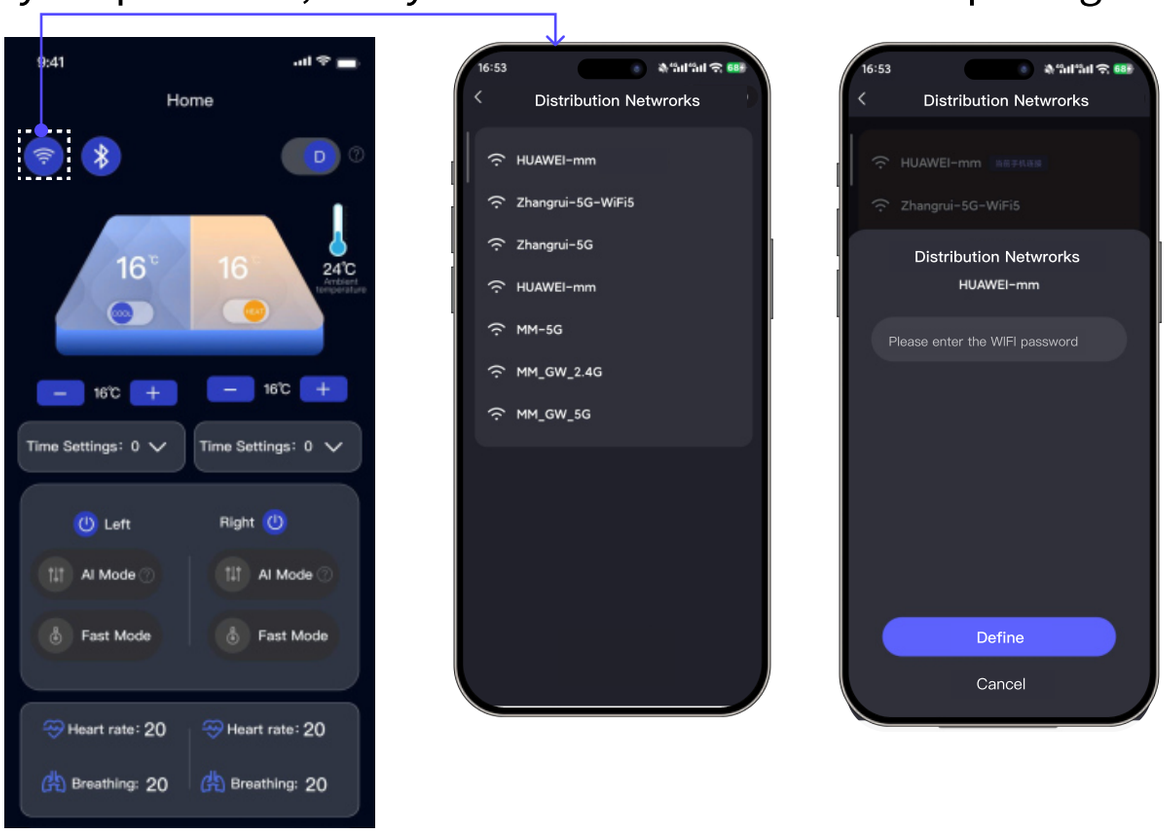

3.Homepage - Control Interface

On the homepage, you can use all device functions and configure corresponding settings.

With Heart Rate Monitor Function (Couple Mode)

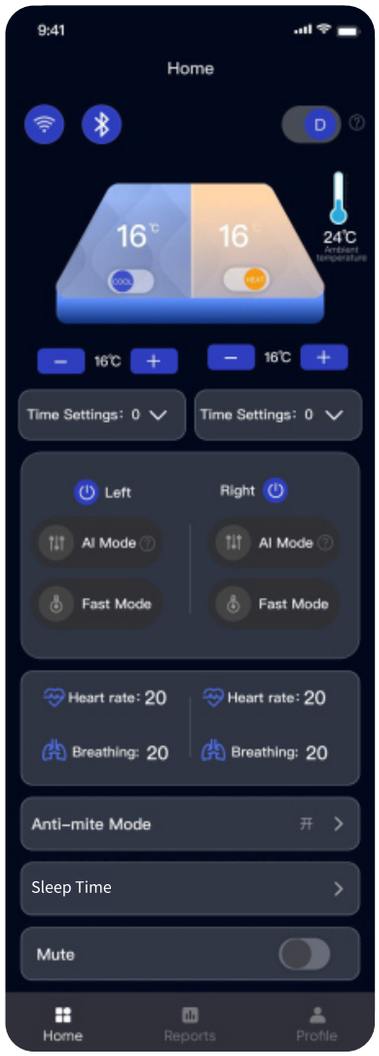

Without Heart Rate Monitor Function (Couple Mode)

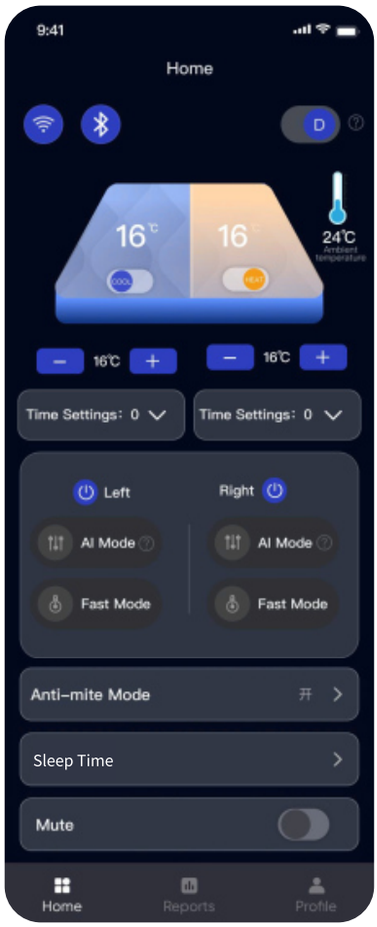

Adjusts the bed temperature to the optimal level based on ambient temperature, following a default 8-hour sleep cycle (2H falling asleep, 2H light sleep, 2H deep sleep, 2H wakefulness). User survey feedback can refine temperature settings. (WH10 Basic version)

Real-time adjusts sleep temperature based on individual profile, preferences and sleep quality. Continuously optimizes temperature parameters with user feedback and 2-week sleep learning data. (WH02 AI version)

Maximizes device performance and fan speed. The device quickly reaches the set temperature and maintains it.

Mite Removal Mode: The blanket heats up to 55°C at full speed for 4 hours, then enters standby mode.

3.1Home Page - Mite Removal & Dehumidification

Turn the Function On/Off
Tap the 「Dehumidification & Dust Mite Removal」 button to enable or disable this function. Once enabled, it will run for 4 hours by default, and other modes will be temporarily unavailable during operation. To end it early, simply tap the button again to turn off the function.

Set a Scheduled Appointment
Tap the 「Schedule」 option. In the pop-up settings window, slide the wheel up/down to select your desired start time. Scheduled appointments can only be set within a 24-hour window. After setting, tap 「Confirm」 to save.

View History Records
In the 「History」 section, you can view the date, runtime, and status of past dehumidification & dust mite removal tasks (e.g., "In Progress", "Completed") to keep track of your device usage.

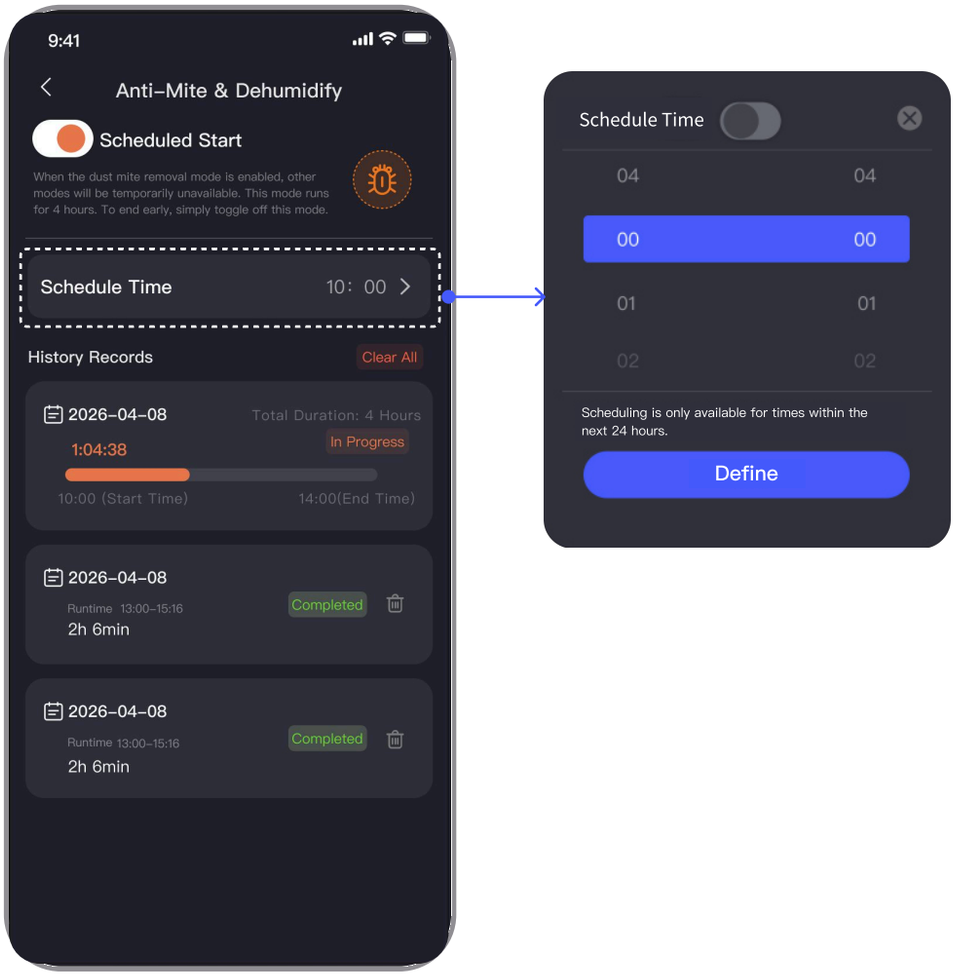

3.2 Homepage - Sleep Schedule

1.Enable Scheduled Timer

Toggle the 「Timer Switch」 to enable the scheduling function.

2.Set Scheduling Target & Mode

- 「Switch Left/Right」: Select which side of the bed (Left / Right) the schedule will apply to.
- 「Cool/Heat Mode」: Set the operating mode (Cooling / Heating) for the scheduled period.

Set Time

- Slide the wheel up/down to set the 「Start Time」 and 「End Time」.
- Go to the 「Repeat」 option to set the repetition cycle for the schedule.

Preset Target Temperature

Tap 「Temperature Preset」 to set the target temperature for the scheduled period. The setting w

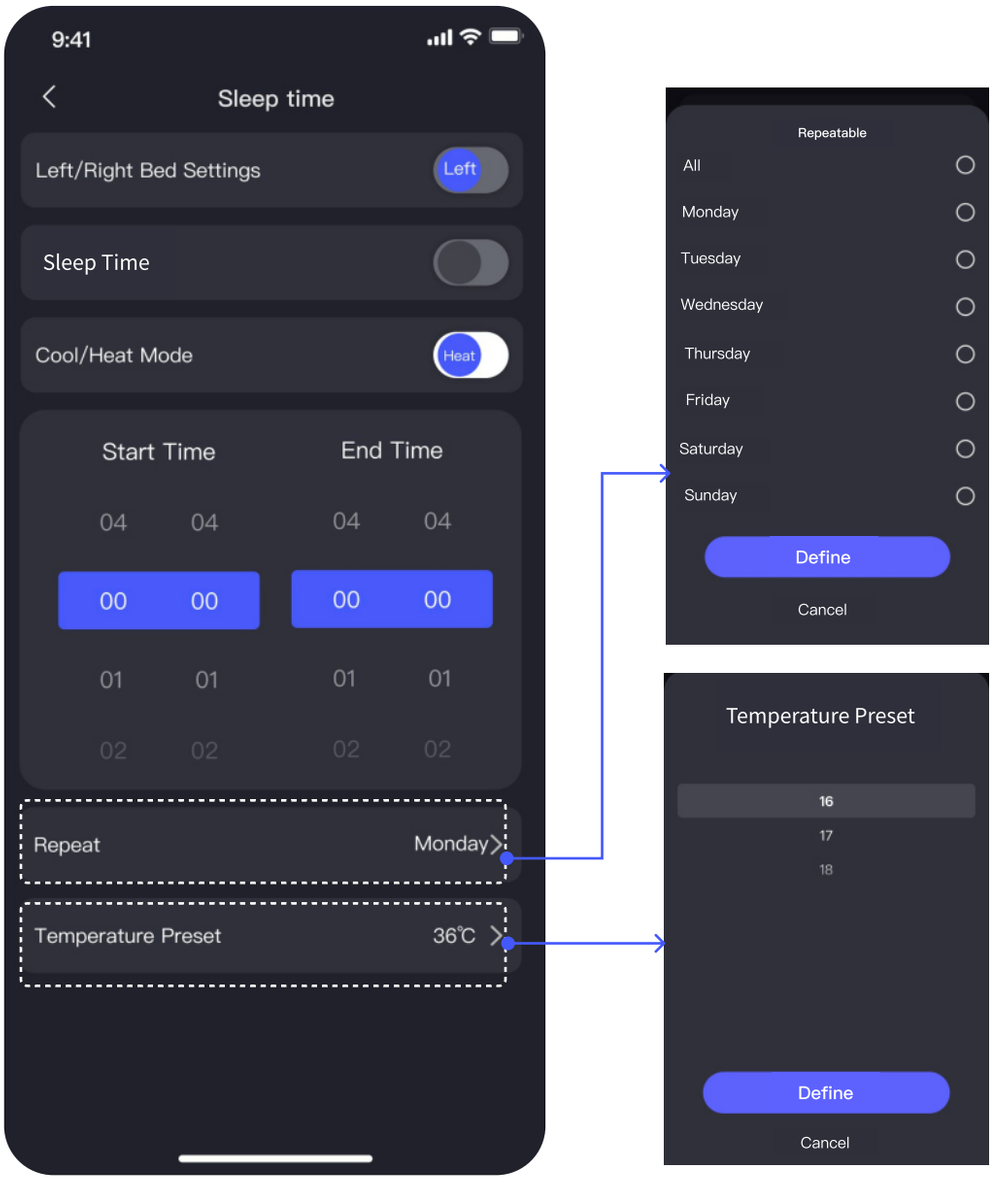

4. Sleep Report (AI Version Only)

The report module includes daily, weekly, and monthly reports, allowing users to understand their sleep status from different time dimensions.

Tap the survey icon to submit product feedback. We will continue to optimize the product experience based on your input.

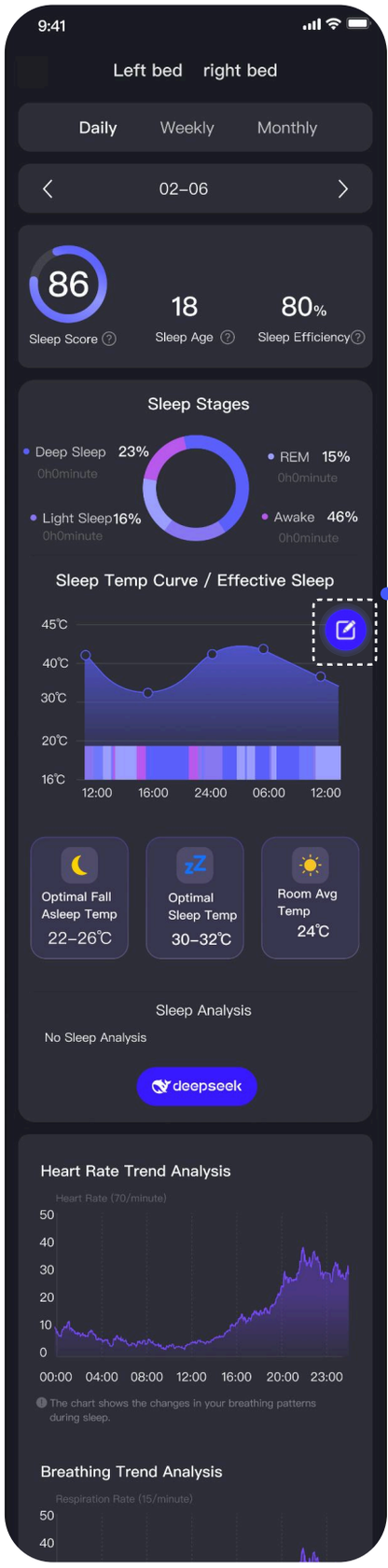

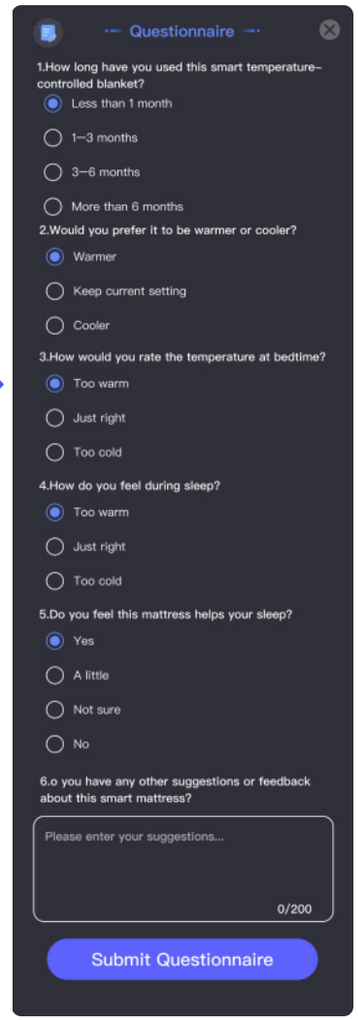

5.My Account Interface

1.The 「My Account」 interface allows users to perform operations such as account login, logout, and device permission management.

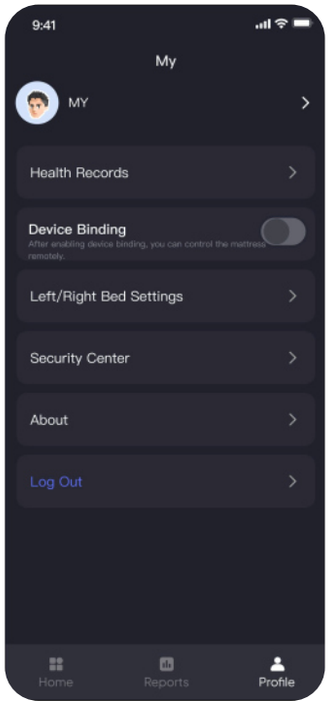

2.My Account - About

Firmware Version Number: Check the version of the device's built-in firmware, making it easy to determine whether firmware upgrade is needed.

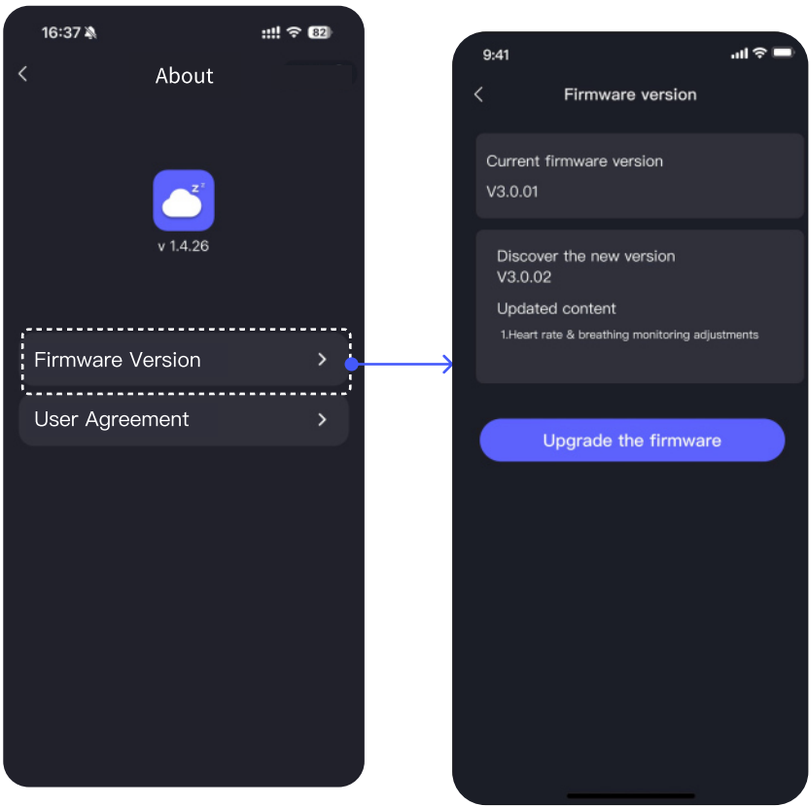

3.My Account - Device Binding

When using the device for the first time, please connect it via Bluetooth and complete the network configuration.

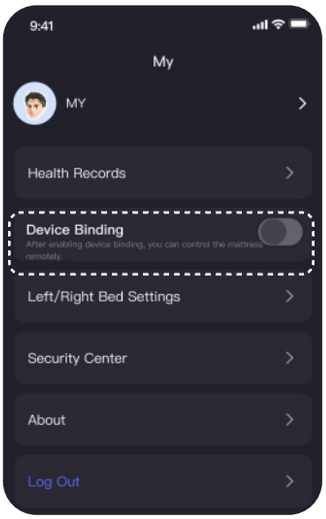

VI. Precautions

Error Codes

1.Panel display errors:E1: Water shortage. E2: Low-temperature protection . E3: High-temperature protection. E4: Device tilt detected.

2.Bluetooth multi-connection: Supports up to 4 concurrent user connections.

3.Long-term use of tap water will cause limescale buildup, which may impair device function. Distilled or purified water is recommended.

4.To ensure full functionality and stable performance, please update the device firmware to the latest version before use.

5.Always power on the device before adding water, under any circumstances.

6.It is recommended to place the main unit above the bed level during use.

Troubleshooting:

1.Verify the device is powered on, using the original dedicated adapter, and that the power supply is stable.

2.Check that the main unit is placed horizontally, at a position no lower than the bed level, with no tilting or leaning.

3.Ensure the water tank is filled to the maximum level line. Use distilled or purified water to prevent limescale buildup.

4.Check that the water hoses between the main unit and mattress are securely connected, with no kinks or leaks.

5.If the temperature control system is not working properly: Unscrew the device cover to release air, wait approximately 20 minutes, then retighten the cover.

VII. Warranty Information

Product Warranty Statement

Thank you for choosing our product. To protect your legal rights, please read the following warranty terms carefully.

Warranty Period

This product is covered by a 1-year free warranty from the date of purchase. The warranty period is based on the date shown on your purchase receipt (invoice or electronic order).

Warranty Coverage

Under normal use, performance failures caused by defects in the product’s materials or workmanship are eligible for free repair or replacement. This specifically includes:

- Main unit core function failures (e.g., unresponsive control panel);
- Non-human-caused damage to original accessories (e.g., water hoses, adapters);
- Functional abnormalities due to design flaws in the software system (firmware upgrade support is available).

Important Reminders

- Please keep your purchase receipt safe. Lost receipts will void your warranty service;
- Parts replaced during the warranty period will inherit the remaining warranty period of the original product;
- This warranty policy applies only to products purchased and used in Mainland China (excluding Hong Kong, Macao, and Taiwan). The company reserves the right of final interpretation.

VIII. Contact Information

Company:Hengli Home Furnishing (Guangzhou) Co., Ltd.

Website:www.hlfurnish.com

Email:eason@hlfurnish.com

Address: No. 666, Building 2, Greenland Airport International Center, Huadu District, Guangzhou City, Guangdong Province

Tel:+86 13879376177

FCC Warning:
Note: This equipment has been tested and found to comply with the limits for a Class B digital device, pursuant to part 15 of the FCC Rules. These limits are designed to provide reasonable protection against harmful interference in a residential installation. This equipment generates, uses and can radiate radio frequency energy and, if not installed and used in accordance with the instructions, may cause harmful interference to radio communications. However, there is no guarantee that interference will not occur in a particular installation. If this equipment does cause harmful interference to radio or television reception, which can be determined by turning the equipment off and on, the user is encouraged to try to correct the interference by one or more of the following measures:

- Reorient or relocate the receiving antenna.
- Increase the separation between the equipment and receiver.
- Connect the equipment into an outlet on a circuit different from that to which the receiver is connected.
- Consult the dealer or an experienced radio/TV technician for help.

Caution: Any changes or modifications to this device not explicitly approved by manufacturer could void your authority to operate this equipment.

This device complies with part 15 of the FCC Rules. Operation is subject to the following two conditions:
(1)This device may not cause harmful interference, and (2) this device must accept any interference received, including interference that may cause undesired operation.

This equipment complies with FCC radiation exposure limits set forth for an uncontrolled environment. This equipment should be installed and operated with minimum distance 20cm between the radiator and your body.