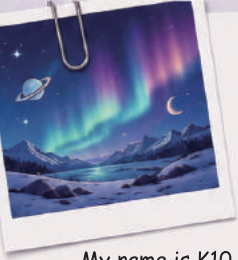

Hi, Earthling!

Nice to finally meet you!

My name is K10, and I'm a little traveler from Galaxy X.

During my travels, I discovered something truly breathtaking — the Northern Lights. Green, blue, red, and purple, they dance across the sky like magic.

Above me, millions of stars twinkled, with Saturn shining quietly in the distance and the moon casting its gentle glow.

It was one of the most awe-inspiring moments of my journey, and I knew I had to bring that wonder back to you.

Whenever the night feels a little too ordinary, turn me on, pick a scene, and let's travel far away — to the aurora-filled skies and starry galaxies, right from your room.

I hope I can bring a little more wonder to your nights, a little more magic to your space, and maybe even spark a few beautiful dreams and wild imaginations along the way.

And hey, even space travelers have their tricky days. If I ever confuse you, misbehave, or simply don't seem quite myself, please contact the wonderful humans at the place where you found me. They're much better at solving Earth problems than I am, and they'll be happy to help make things right.

Thank you for giving this little astronaut a place to land. ☆

Here's to endless auroras,
starry skies, and amazing adventures.

See you among the stars,

K10

Your little traveler from Galaxy X

Hi, I'm K10 –
– your little galaxy buddy.

If I made your night a little more magical, would you mind giving me a shout-out where you found me? Your kind words are like stardust to me — they fuel my glow and help me grow bigger and brighter!"

Astronaut Northern Lights Projector

User Manual

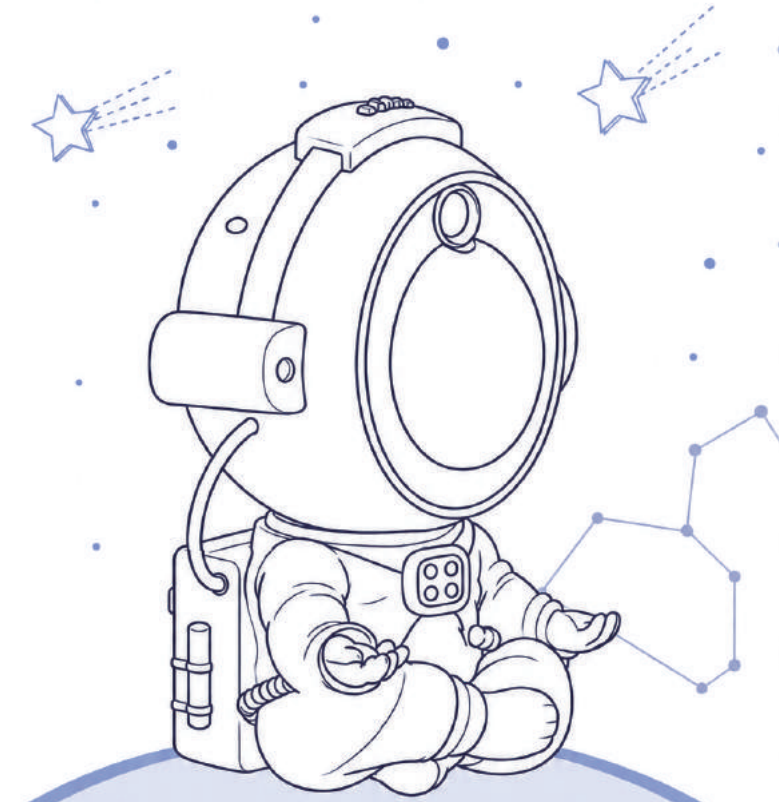

Light Up Your Imagination

A. Packing List

- Northern Lights Projector
- Manual
- Type-C Power Cable

- **Note:** Not include 5V/2A power adapter & AAA batteries.
  This product isn't battery-powered—it has to stay plugged in to work.

B. Frequently Asked Questions

Q1. Why doesn't my galaxy projector turn on when I first plug it in?

Please make sure you are using a **5V/2A power adapter**. Using an incompatible adapter may prevent the projector from powering on properly.

Q2. Why doesn't my galaxy projector work when I try to use it a second time?

The projector auto-shuts off after 6 hours. To reactivate it, there are 3 ways:

① Short press the button on the back of astronaut.

② Press the button on the remote control.

③ Unplug the power supply, then plug it back in.

Please make sure you're using a 5V/2A power adapter. If you're not using the recommended 5V/2A charger, the device might turn on once but won't start up again after that. If that happens, just unplug the charger and plug it back in — the projector will light right up on its own

Q3. Why isn't my remote control working?

Please check if **AAA batteries** are properly installed in the remote control.

Q4. How do I play my phone music via Bluetooth?

① Press the button M on the remote control (or the button on the back of astronaut). The device will switch to Bluetooth mode and announce "Bluetooth Mode".

② Search "**ASTRONAUT**" on your phone via Bluetooth and click it.

③ Connect and enjoy your music!

C. Getting to Know Your Galaxy Projector

Note:

1. The device does not have a built-in battery. Once you unplug it from the power source, it will shut off immediately and cannot be used without being plugged in.
2. Please make sure you are using a 5V/2A power adapter.

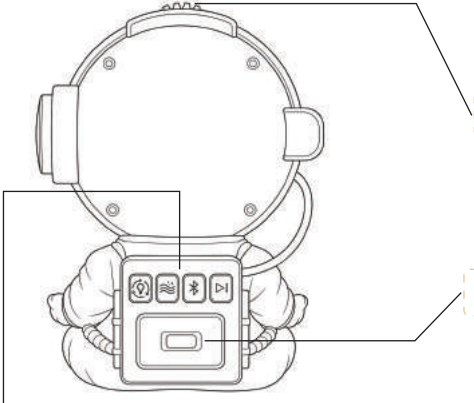

When on, Short Press: Switch among 19 Aurora Colors
Long Press: Aurora Colors OFF
When off, Short Press: Aurora Colors ON

Short Press to Cycle Modes:
Aurora On & Stars On → Aurora Only- Stars Only

Short Press: Switch White Noise/ Bluetooth modes

Short Press: Play Next White Noise/ Song

REMOTE CONTROL GUIDE

Please insert 2 AAA batteries before using the remote control.

Point the remote control directly at the projector for the best response.

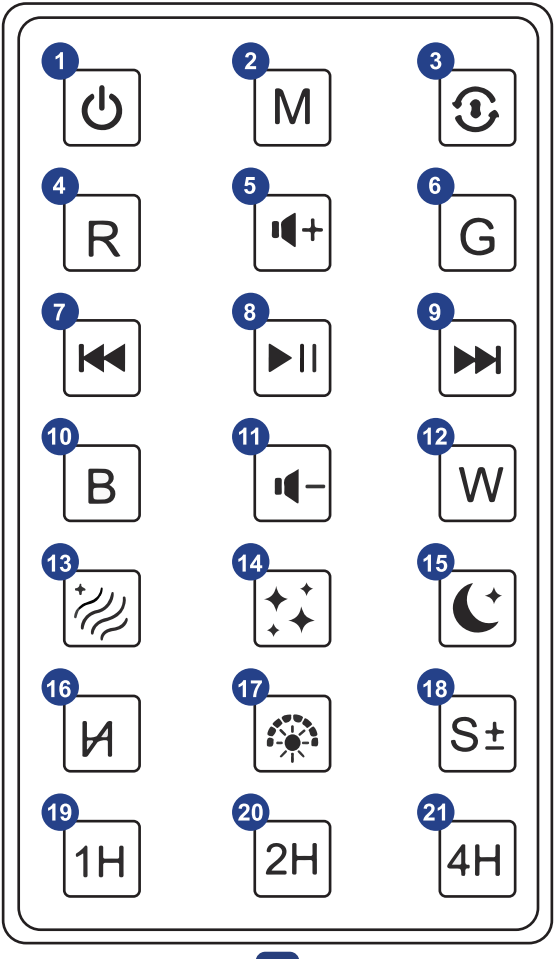

BASIC CONTROLS

1 **Power ON/OFF**
Turn the projector on or off.

2 M **Bluetooth / White Noise Mode**
Switch between Bluetooth mode and White Noise mode.

3 **Aurora Color Selection**
Press repeatedly to cycle through 19 aurora colors.

AURORA CONTROL (RGBW)

4 R **Red Light ON/OFF**
Turn red aurora light on or off.

6 G **Green Light ON/OFF**
Turn green aurora light on or off.

10 B **Blue Light ON/OFF**
Turn blue aurora light on or off.

12 W **White Light ON/OFF**
Turn white aurora light on or off.

13 **Aurora Light ON/OFF**
Turn the aurora light effect on or off.

Tips: You can activate 1 to 4 colors at the same time to create your own unique and fun custom aurora!

17 **Brightness**
Press repeatedly to cycle through 4 brightness levels.

18 S± **Aurora Speed**
Press repeatedly to cycle through 4 speed levels.

WHITE NOISE / MUSIC CONTROL

5 **Volume +**
Increase the volume.

11 **Volume –**
Decrease the volume.

7 **Previous Track**
Play the previous music or white noise.

9 **Next Track**
Play the next music or white noise.

8 **Play / Pause**
Play or pause the music or white noise.

STARS MODE

14 **Starlight Mode**
Press repeatedly to cycle:
Off → Steady → Fade → Off.

FILMS CONTROL

15 **Film Projection ON/OFF**
Turn the film projection on or off.

TIMER SETTING

16 **Cancel Timer**
Cancel the current timer setting.

19 **1H Timer**
Automatically turn off after 1 hour.

20 **2H Timer**
Automatically turn off after 2 hours.

21 **4H Timer**
Automatically turn off after 4 hours.

D. Adjustable Magnetic Head

You can adjust the projection angle by rotating the magnetic head up and down.

Note: Don't pull the head and body apart forcefully, otherwise you may damage the internal wiring.

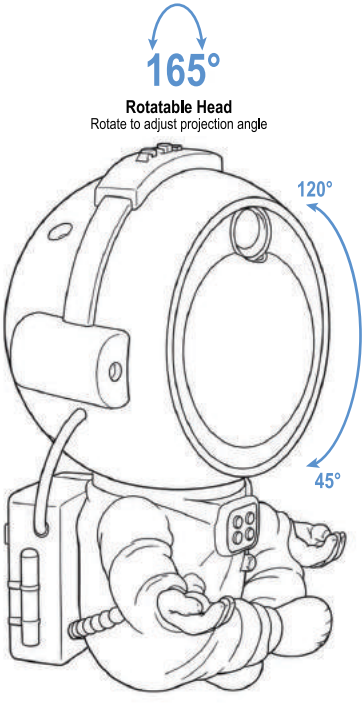

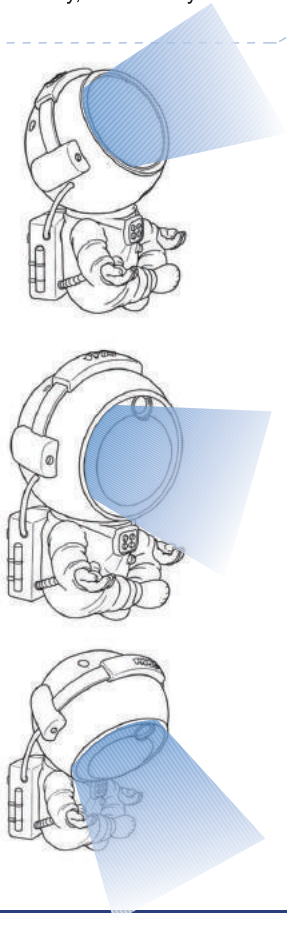

E. Important Notes

1. Please insert 2 AAA batteries before using the remote control.

2. Use the correct 5V/2A power supply.

3. Point the remote control directly at the projector for the best response.

4. The device does not have a built-in battery. Once you unplug it from the power source, it will shut off immediately and cannot be used without being plugged in.

5. For your convenience, this product is designed to power on automatically upon connection to a power source. Simply plug it into a compatible 5V/2A power adapter, and the galaxy projector will illuminate instantly. In the event of a power outage, the unit will restart automatically once power is restored and will shut off after 6 hours.

6. Children under 7 must be supervised to use by an adult.

7. Do not look directly into the projection lens.

8. Keep the galaxy projector away from water.

9. Don’t pull the head and body apart forcefully, otherwise you may damage the internal wiring.

10. The projector will automatically turn off 6 hours after powering on.

FCC Caution.

This device complies with part 15 of the FCC Rules. Operation is subject to the following two conditions:

(1) This device may not cause harmful interference, and

(2) this device must accept any interference received, including interference that may cause undesired operation.

Any Changes or modifications not expressly approved by the party responsible for compliance could void the user's authority to operate the equipment.

Note: This equipment has been tested and found to comply with the limits for a Class B digital device, pursuant to part 15 of the FCC Rules. These limits are designed to provide reasonable protection against harmful interference in a residential installation. This equipment generates uses and can radiate radio frequency energy and, if not installed and used in accordance with the instructions, may cause harmful interference to radio communications. However, there is no guarantee that interference will not occur in a particular installation. If this equipment does cause harmful interference to radio or television reception, which can be determined by turning the equipment off and on, the user is encouraged to try to correct the interference by one or more of the following measures:

-Reorient or relocate the receiving antenna.

-Increase the separation between the equipment and receiver.

-Connect the equipment into an outlet on a circuit different from that to which the receiver is connected.

-Consult the dealer or an experienced radio/TV technician for help.

FCC Radiation Exposure Statement:

This equipment complies with FCC radiation exposure limits set forth for an uncontrolled environment. This equipment should be installed and operated with minimum distance 20 cm between the radiator & your body.