RADIO TEST REPORT

Test Report No. : 13332972S-A-R2

Applicant	:	**ALPINE ELECTRONICS, INC.**
Type of EUT	:	**Display Unit**
Model Number of EUT	:	**GABI01**
FCC ID	:	**A269ZUA152**
Test regulation	:	**FCC Part 15 Subpart C: 2020** **"For Permissive Change** **(Radiated Spurious: Emission tests only)"**
Test Result	:	**Complied (Refer to SECTION 3.2)**

1. This test report shall not be reproduced in full or partial, without the written approval of UL Japan, Inc.
2. The results in this report apply only to the sample tested.
3. This sample tested is in compliance with the limits of the above regulation.
4. The test results in this test report are traceable to the national or international standards.
5. This test report must not be used by the customer to claim product certification, approval, or endorsement by any agency of the Federal Government.
6. This test report covers Radio technical requirements.
   It does not cover administrative issues such as Manual or non-Radio test related Requirements. (if applicable)
7. The all test items in this test report are conducted by UL Japan, Inc. Shonan EMC Lab.
8. The opinions and the interpretations to the result of the description in this report are outside scopes where UL Japan has been accredited.
9. The information provided from the customer for this report is identified in SECTION 1.
10. This report is a revised version of 13332972S-A-R1. 13332972S-A-R1 is replaced with this report.

Date of test: May 3 to 8, 2020

Representative test engineer:
Shiro Kobayashi
Engineer
Consumer Technology Division

Approved by:
Hikaru Shirasawa
Engineer
Consumer Technology Division

CERTIFICATE 1266.03

☐ The testing in which "Non-accreditation" is displayed is outside the accreditation scopes in UL Japan.
☒ There is no testing item of "Non-accreditation".

UL Japan, Inc.
Shonan EMC Lab.
1-22-3 Megumigaoka, Hiratsuka-shi, Kanagawa-ken, 259-1220 JAPAN
Telephone : +81 463 50 6400
Facsimile : +81 463 50 6401

REVISION HISTORY

Original Test Report No.: 13332972S-A

Revision	Test report No.	Date	Page revised	Contents
- (Original)	13332972S-A	June 4, 2020	-	-
1	13332972S-A-R1	June 16, 2020	1	Deletion of description: Test item: Radiated emission
				Addition of remarks "For Permissive Change (Radiated Spurious: Emission tests only)"
			9	Addition of remarks: "* Pre-check has been performed with Tag and without Tag, and measurement was conducted with the worst case with Tag."
			11	Addition of description: "The limits in CFR 47, Part 15, Subpart C, paragraph 15.209(a), are identical to those in RSS-Gen section 8.9, Table 6, since the measurements are performed in terms of magnetic field strength and converted to electric field strength levels (as reported in the table) using the free space impedance of 377 Ohmes. For example, the measurement at frequency X kHz resulted in a level of Y dBuV/m, which is equivalent to Y – 51.5 = Z dBuA/m, which has the same margin, W dB, to the corresponding RSS-Gen Table 6 limit as it has to 15.209(a) limit."
			17	Correction of typo: "Below 1 GHz" and "Above 1 GHz" → "Below 30 MHz" and "Above 30 MHz"
2	13332972S-A-R2	June 23, 2020	5	Addition of remarks to Section 2: "The original test report was performed with a model of a car to install (E2UL)." and "* In this test report, the test had been conducted with a model of a car to install (C1UL)."

Reference: Abbreviations (Including words undescribed in this report)

A2LA	The American Association for Laboratory Accreditation
AC	Alternating Current
AFH	Adaptive Frequency Hopping
AM	Amplitude Modulation
Amp, AMP	Amplifier
ANSI	American National Standards Institute
Ant, ANT	Antenna
AP	Access Point
ASK	Amplitude Shift Keying
Atten., ATT	Attenuator
AV	Average
BPSK	Binary Phase-Shift Keying
BR	Bluetooth Basic Rate
BT	Bluetooth
BT LE	Bluetooth Low Energy
BW	BandWidth
Cal Int	Calibration Interval
CCK	Complementary Code Keying
Ch., CH	Channel
CISPR	Comite International Special des Perturbations Radioelectriques
CW	Continuous Wave
DBPSK	Differential BPSK
DC	Direct Current
D-factor	Distance factor
DFS	Dynamic Frequency Selection
DQPSK	Differential QPSK
DSSS	Direct Sequence Spread Spectrum
EDR	Enhanced Data Rate
EIRP, e.i.r.p.	Equivalent Isotropically Radiated Power
EMC	ElectroMagnetic Compatibility
EMI	ElectroMagnetic Interference
EN	European Norm
ERP, e.r.p.	Effective Radiated Power
EU	European Union
EUT	Equipment Under Test
Fac.	Factor
FCC	Federal Communications Commission
FHSS	Frequency Hopping Spread Spectrum
FM	Frequency Modulation
Freq.	Frequency
FSK	Frequency Shift Keying
GFSK	Gaussian Frequency-Shift Keying
GNSS	Global Navigation Satellite System
GPS	Global Positioning System
Hori.	Horizontal
ICES	Interference-Causing Equipment Standard
IEC	International Electrotechnical Commission
IEEE	Institute of Electrical and Electronics Engineers
IF	Intermediate Frequency
ILAC	International Laboratory Accreditation Conference
ISED	Innovation, Science and Economic Development Canada
ISO	International Organization for Standardization
JAB	Japan Accreditation Board
LAN	Local Area Network
LIMS	Laboratory Information Management System
MCS	Modulation and Coding Scheme
MRA	Mutual Recognition Arrangement
N/A	Not Applicable
NIST	National Institute of Standards and Technology
NS	No signal detect.
NSA	Normalized Site Attenuation
NVLAP	National Voluntary Laboratory Accreditation Program
OBW	Occupied Band Width
OFDM	Orthogonal Frequency Division Multiplexing
P/M	Power meter
PCB	Printed Circuit Board
PER	Packet Error Rate
PHY	Physical Layer
PK	Peak
PN	Pseudo random Noise
PRBS	Pseudo-Random Bit Sequence
PSD	Power Spectral Density
QAM	Quadrature Amplitude Modulation
QP	Quasi-Peak
QPSK	Quadri-Phase Shift Keying
RBW	Resolution Band Width
RDS	Radio Data System
RE	Radio Equipment
RF	Radio Frequency
RMS	Root Mean Square
RSS	Radio Standards Specifications
Rx	Receiving
SA, S/A	Spectrum Analyzer
SG	Signal Generator
SVSWR	Site-Voltage Standing Wave Ratio
TR	Test Receiver
Tx	Transmitting
VBW	Video BandWidth
Vert.	Vertical
WLAN	Wireless LAN

Contents

Page

SECTION 1: Customer information 5
SECTION 2: Equipment under test (E.U.T.) 5
SECTION 3: Test specification, procedures & results 6
SECTION 4: Operation of E.U.T. during testing.....9
SECTION 5: Radiated emission 10
APPENDIX 1: Data of Radio tests.....13
APPENDIX 2: Test instruments 16
APPENDIX 3: Photographs of test setup.....17

SECTION 1: Customer information

Company Name	:	Alpine Electronics, Inc.
Address	:	20-1 Yoshima-Industrial Park, Iwaki, Fukushima 970-1192, Japan
Telephone Number	:	+81-246-36-4111
Facsimile Number	:	+81-246-36-6898
Contact Person	:	Nobuyuki Omi

The information provided from the customer is as follows;
- Applicant, Type of EUT, Model Number of EUT, FCC ID on the cover and other relevant pages
- Operating/Test Mode(s) (Mode(s)) on all the relevant pages
- SECTION 1: Customer information
- SECTION 2: Equipment under test (EUT)
- SECTION 4: Operation of EUT during testing

* The laboratory is exempted from liability of any test results affected from the above information in SECTION 2 and 4.

SECTION 2: Equipment under test (E.U.T.)

2.1 Identification of E.U.T.

Type of Equipment	:	Display Unit
Model No.	:	GABI01
Serial No.	:	Refer to Section 4, Clause 4.2
Rating	:	DC 13.5 V
Receipt Date of Sample (Information from test lab.)	:	April 28, 2020
Country of Mass-production	:	China, Mexico
Condition of EUT	:	Production prototype (Not for Sale: This sample is equivalent to mass-produced items.)
Modification of EUT	:	No Modification by the test lab

2.2 Product description

Model: GABI01(referred to as the EUT in this report) is a Display Unit.

The original test report was performed with a model of a car to install (E2UL).
This EUT is a variant model of original filing. The difference is only a model of a car to install (C1UL, C1TL).
* In this test report, the test had been conducted with a model of a car to install (C1UL).

General Specification

Clock frequency(ies) in the system	:	Ucom: 8 MHz/ NFC: 13.56 MHz/ Xta: 27.12 MHz

Radio Specification

Radio Type	:	Transceiver
Frequency of Operation	:	13.56 MHz
Modulation	:	ASK
Antenna type	:	Loop
Operating Temperature	:	-40 deg.C to +85 deg C.

SECTION 3: Test specification, procedures & results

3.1 Test specification

Test Specification : FCC Part 15 Subpart C
FCC Part 15 final revised on April 1, 2020 and effective June 1, 2020 except 15.258
* The revision does not affect the test result conducted before its effective date.

Title : FCC 47 CFR Part 15 Radio Frequency Device Subpart C Intentional Radiators
Section 15.207 Conducted limits
Section 15.209 Radiated emission limits, general requirements
Section 15.215 Additional provisions to the general radiated emission limitations.
Section 15.225 Operation within the bands 13.110 - 14.010 MHz.

3.2 Procedures & Results

Item	Test Procedure	Specification	Worst margin	Results	Remarks
Electric Field Strength of Fundamental Emission	**FCC:** ANSI C63.10-2013 6. Standard test methods **IC:** RSS-Gen 6.4, 6.12	**FCC:** Section 15.225 (a) **IC:** RSS-210 B.6	72.7 dB (Vertical)	Complied a)	Radiated
Electric Field Strength of Spurious Emission (within the 13.110-14.010 MHz band)	**FCC:** ANSI C63.10-2013 6. Standard test methods **IC:** RSS-Gen 6.4, 6.13	**FCC:** Section 15.225 (b)(c) **IC:** RSS-210 B.6	44.0 dB (14.010 MHz, Horizontal & Vertical)	Complied a)	Radiated
Electric Field Strength of Spurious Emission (outside of the 13.110-14.010 MHz band)	**FCC:** ANSI C63.10-2013 6. Standard test methods **IC:** RSS-Gen 6.4, 6.13	**FCC:** Section 15.209 Section 15.225 (d) **IC:** RSS-210 B.6	4.7 dB (40.68 MHz, Vertical)	Complied b)	Radiated

Note: UL Japan, Inc.'s EMI Work Procedures No. 13-EM-W0420 and 13-EM-W0422.

a) Refer to APPENDIX 1 (data of Electric field strength of Fundamental emission and Spurious emission within the band)
b) Refer to APPENDIX 1 (data of Radiated Emission)

Symbols:
Complied The data of this test item has enough margin, more than the measurement uncertainty.
Complied# The data of this test item meets the limits unless the measurement uncertainty is taken into consideration.

FCC Part 15.31 (e)
This EUT provides stable voltage constantly to RF part regardless of input voltage. Instead of a new battery, DC power supply was used for the test. That does not affect the test result. Therefore, this EUT complies with the requirement.

FCC Part 15.203 Antenna requirement
It is impossible for end users to replace the antenna, because the antenna is mounted inside of the EUT. Therefore, the equipment complies with the requirement.

3.3 Addition to standard

No addition, exclusion nor deviation has been made from the standard.

3.4 Uncertainty

There is no applicable rule of uncertainty in this applied standard. Therefore, the results are derived depending on whether or not laboratory uncertainty is applied.

The following uncertainties have been calculated to provide a confidence level of 95 % using a coverage factor *k*=2.

Shonan EMC Lab.

Item	Frequency range	Uncertainty (+/-)			
		No. 1 SAC / SR	No. 2 SAC / SR	No. 3 SAC / SR	No. 4,5,6,8 SR
Conducted emission (AC Mains) LISN	150 kHz-30 MHz	2.6 dB	2.6 dB	2.5 dB	2.6 dB
Radiated emission	9 kHz-30 MHz	3.0 dB	3.0 dB	3.0 dB	-
(Measurement distance: 3 m)	30 MHz-200 MHz	4.6 dB	4.6 dB	4.6 dB	-
	200 MHz-1 GHz	6.0 dB	6.0 dB	6.0 dB	-
	1 GHz-6 GHz	4.9 dB	4.9 dB	4.9 dB	-
	6 GHz-18 GHz	5.5 dB	5.5 dB	5.5 dB	-
	18 GHz-40 GHz	5.4 dB	5.4 dB	5.4 dB	-
Radiated emission	1 GHz-18 GHz	5.8 dB	5.8 dB	5.8 dB	-
(Measurement distance: 1 m)	18 GHz-40 GHz	5.7 dB	5.7 dB	5.7 dB	-

SAC=Semi-Anechoic Chamber

SR= Shielded Room is applied besides radiated emission

Antenna terminal test	Uncertainty (+/-)
Power Measurement above 1 GHz (Average Detector)_SPM-06	0.98 dB
Power Measurement above 1 GHz (Peak Detector)_SPM-06	1.75 dB
Power Measurement above 1 GHz (Average Detector)_SPM-07	0.89 dB
Power Measurement above 1 GHz (Peak Detector)_SPM-07	1.12 dB
Power Measurement above 1 GHz (Average Detector)_SPM-13	1.06 dB
Power Measurement above 1 GHz (Peak Detector)_SPM-13	1.24 dB
Spurious emission (Conducted) below 1GHz	0.9 dB
Spurious emission (Conducted) 1 GHz-3 GHz	0.9 dB
Spurious emission (Conducted) 3 GHz-18 GHz	2.9 dB
Spurious emission (Conducted) 18 GHz-26.5 GHz	2.6 dB
Spurious emission (Conducted) 26.5 GHz-40 GHz	2.0 dB
Bandwidth Measurement	0.07 %
Duty cycle and Time Measurement	0.262 %
Temperature	0.95 deg.C.
Voltage	0.83 %

3.5 Test location

UL Japan, Inc. Shonan EMC Lab.
1-22-3, Megumigaoka, Hiratsuka-shi, Kanagawa-ken 259-1220 JAPAN
Telephone: +81 463 50 6400, Facsimile: +81 463 50 6401
A2LA Certificate Number: 1266.03 (FCC Test Firm Registration Number: 626366, ISED Lab Company Number: 2973D)

Test site	Width x Depth x Height (m)	Size of reference ground plane (m) / horizontal conducting plane	Maximum measurement distance
No.1 Semi-anechoic chamber	20.6 x 11.3 x 7.65	20.6 x 11.3	10 m
No.2 Semi-anechoic chamber	20.6 x 11.3 x 7.65	20.6 x 11.3	10 m
No.3 Semi-anechoic chamber	12.7 x 7.7 x 5.35	12.7 x 7.7	5 m
No.4 Semi-anechoic chamber	8.1 x 5.1 x 3.55	8.1 x 5.1	-
No.1 Shielded room	6.8 x 4.1 x 2.7	6.8 x 4.1	-
No.2 Shielded room	6.8 x 4.1 x 2.7	6.8 x 4.1	-
No.3 Shielded room	6.3 x 4.7 x 2.7	6.3 x 4.7	-
No.4 Shielded room	4.4 x 4.7 x 2.7	4.4 x 4.7	-
No.5 Shielded room	7.8 x 6.4 x 2.7	7.8 x 6.4	-
No.6 Shielded room	7.8 x 6.4 x 2.7	7.8 x 6.4	-
No.8 Shielded room	3.45 x 5.5 x 2.4	3.45 x 5.5	-
No.1 Measurement room	2.55 x 4.1 x 2.5	-	-

3.6 Test setup, Data of EMI & Test instruments

Refer to APPENDIX.

SECTION 4: Operation of E.U.T. during testing

4.1 Operating mode

The EUT exercise program used during testing was designed to exercise the various system components in a manner similar to typical use.

Test sequence is used: Transmitting (13.56 MHz)

Power settings	Fixed
Software	MY20 C1UL
Version	Ver. 1.600
Date	May 3, 2020

Justification: The system was configured in typical fashion (as a customer would normally use it) for testing.

4.2 Configuration of tested system

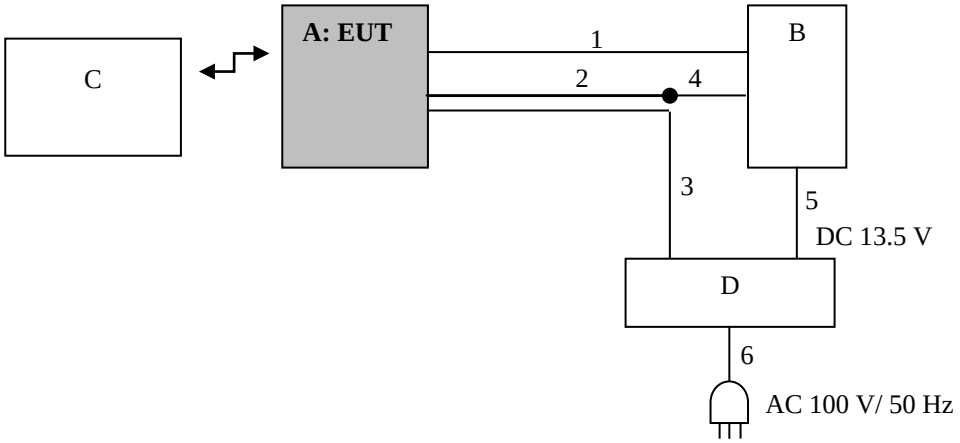

* Test data was taken under worse case conditions.
* Pre-check has been performed with Tag and without Tag, and measurement was conducted with the worst case with Tag.

Description of EUT and support equipment

No.	Item	Model number	Serial number	Manufacturer	Remarks
A	Display Unit	GABI01	1	Alpine Electronics, Inc.	EUT
B	CAN BOX	-	-	Alpine Electronics, Inc.	-
C	Tag	NFC Forum Type2	TU-C1-E52349	-	-
D	Power Supply(DC)	PAN35-10A	NA000955	KIKUSUI	-

List of cables used

No.	Cable	Length (m)	Shield-Cable	Shield-Connector	Remarks
1	Signal	5.1	Unshielded	Unshielded	-
2	Signal	5.1	Unshielded	Unshielded	-
3	DC	5.1	Unshielded	Unshielded	-
4	Signal	0.45	Unshielded	Unshielded	-
5	DC	0.3	Unshielded	Unshielded	-
6	AC	2.0	Unshielded	Unshielded	-

SECTION 5: Radiated emission

5.1 Operating environment

Test place : See test data (APPENDIX 1)
Temperature : See test data (APPENDIX 1)
Humidity : See test data (APPENDIX 1)

5.2 Test configuration

EUT was placed on a platform of nominal size, 1.0 m by 1.5 m, raised 80 cm above the conducting ground plane. That has very low permittivity.
Photographs of the set up are shown in APPENDIX 3.

5.3 Test procedure

The Radiated Electric Field Strength intensity has been measured on a semi-anechoic chamber with a ground plane at a distance of 3 m.
Although these tests were performed other than open area test site, adequate comparison measurements were confirmed against 30 m open are test site. Therefore sufficient tests were made to demonstrate that the alternative site produces results that correlate with the ones of tests made in an open field based on KDB 414788. These tests were performed in semi anechoic chamber. Therefore the measured level of emissions may be higher than if measurements were made without a ground plane. However test results were confirmed to pass against standard limit.

The Radiated Electric Field Strength intensity has been measured with a ground plane and at a distance of 3 m.

Frequency: From 9 kHz to 30 MHz at distance 3 m (Refer to Figure 2)
The EUT was rotated a full revolution in order to obtain the maximum value of the electric field intensity.
The measurements were performed for vertical polarization (antenna angle: 0 deg., 45 deg., 90 deg. and 135 deg.) and horizontal polarization. Drawing of the antenna direction is shown in Figure 1.

Frequency: From 30 MHz to 1 GHz at distance 3 m (Refer to Figure 2).
The measuring antenna height was varied between 1 and 4 m and EUT was rotated a full revolution in order to obtain the maximum value of the electric field intensity.
The measurements were performed for both vertical and horizontal antenna polarization.

Measurements were performed with QP, PK, and AV detector.
The radiated emission measurements were made with the following detector function of the test receiver.

	9 kHz to 90 kHz & 110 kHz to 150 kHz	90 kHz to 110 kHz	150 kHz to 490 kHz	490 kHz to 30 MHz	30 MHz to 1 GHz
Detector Type	PK/AV	QP	PK/AV	QP	QP
IF Bandwidth	200 Hz	200 Hz	10 kHz	9 kHz	120 kHz
Distance factor *1)	-80 dB	-80 dB	-80 dB	-40 dB	-
Measuring antenna	Loop antenna				Biconical (30 MHz - 199.99 MHz) Logperiodic (200 MHz - 1 GHz)

*1) FCC 15.31 (f)(2) (9 kHz-30 MHz)
Distance Factor: 40 x log (3 m / 300 m) = -80 dB
Distance Factor: 40 x log (3 m / 30 m) = -40 dB

The EUT was set at 51.5 degree (on the condition that the horizontal plane is set to 0 deg.) as normal position according to the EUT's specification.

The limits in CFR 47, Part 15, Subpart C, paragraph 15.209(a), are identical to those in RSS-Gen section 8.9, Table 6, since the measurements are performed in terms of magnetic field strength and converted to electric field strength levels (as reported in the table) using the free space impedance of 377 Ohmes. For example, the measurement at frequency X kHz resulted in a level of Y dBuV/m, which is equivalent to Y – 51.5 = Z dBuA/m, which has the same margin, W dB, to the corresponding RSS-Gen Table 6 limit as it has to 15.209(a) limit.

Figure 1: Direction of the Loop Antenna

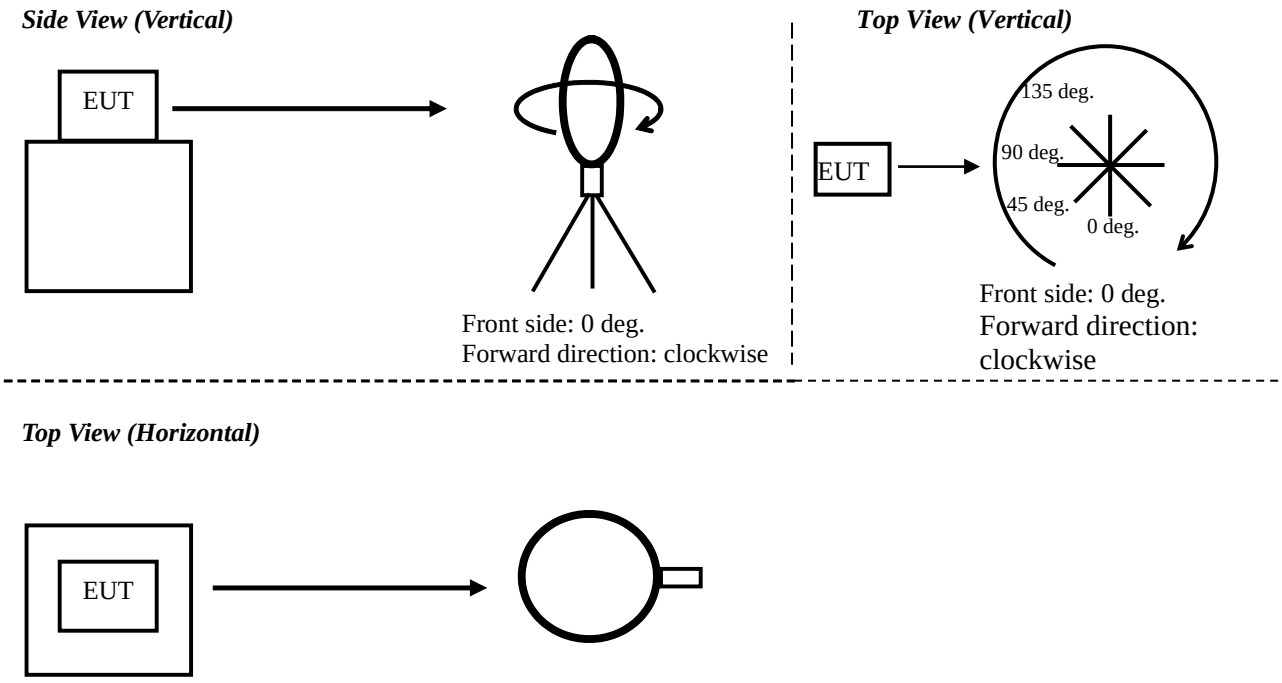

Antenna was not rotated.

Figure 2. Antenna angle

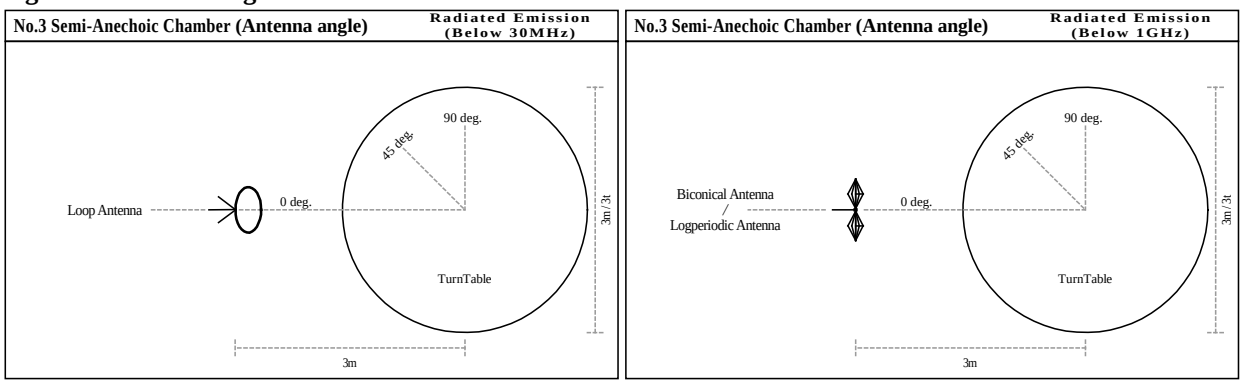

[Test Setup]
Below 1 GHz

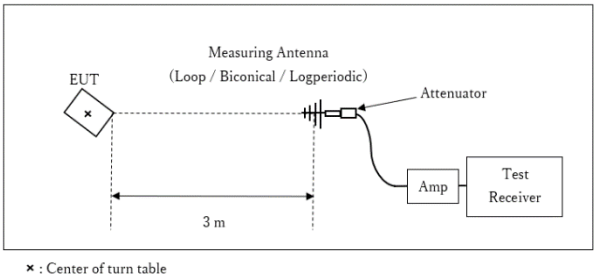

Test Distance: 3 m

5.4 Results

Summary of the test results : Pass

Refer to APPENDIX 1

APPENDIX 1: Data of Radio tests

Data of Electric field strength of Fundamental emission and Spurious emission within the band: FCC15.225(a)(b)(c)

UL Japan, Inc.
Shonan EMC Lab., No.3 Semi Anechoic Chamber

Company:	Alpine Electronics, Inc.	Regulation:	FCC Part15 Subpart C 15.225	
Equipment:	Display Unit	Test Distance:	3 m	
Model:	GABI01	Date:	May 03, 2020	May 08, 2020
Sample No.:	1	Temperature:	23 deg.C	22 deg.C
Power:	DC 13.5 V	Humidity:	50 %RH	40 %RH
Mode:	Transmitting 13.56 MHz	ENGINEER:	Toshinori Yamada	Shiro Kobayashi

Remarks: : Tag Type 2 , Vertical polarization (antenna angle) of the worst case: 0 deg

Fundamental emission

No.	FREQ	Test Receiver Reading		Antenna Factor	Loss	AMP GAIN	Distance factor	RESULT		LIMIT (30m)	MARGIN	
		Hor	Ver					Hor	Ver		Hor	Ver
	[MHz]	[dBuV]	[dBuV]	[dB/m]	[dB]	[dB]	[dB]	[dBuV/m]	[dBuV/m]	[dBuV/m]	[dB]	[dB]
1	13.560	48.98	56.11	20.91	6.36	32.19	-40.00	4.06	11.19	83.9	79.8	72.7

Calculation:Result[dBuV/m]=Reading[dBuV]+Ant.Fac[dB/m]+Loss(Cable+ATT)[dB]-Gain(AMP)[dB]+Distance factor[dB]

Distance factor: 40 x log (3 m/30 m) = -40 dB

Limits (30 m)

・13.553 MHz to 13.567 MHz : 83.9 dBuV/m (FCC 15.225(a))

Spurious emission within the band

No.	FREQ	Test Receiver Reading		Antenna Factor	Loss	AMP GAIN	Distance factor	RESULT		LIMIT (30m)	MARGIN	
		Hor	Ver					Hor	Ver		Hor	Ver
	[MHz]	[dBuV]	[dBuV]	[dB/m]	[dB]	[dB]	[dB]	[dBuV/m]	[dBuV/m]	[dBuV/m]	[dB]	[dB]
1	13.110	30.30	30.20	20.84	6.36	32.19	-40.00	-14.69	-14.79	29.5	44.1	44.2
2	13.349	31.20	33.80	20.88	6.36	32.19	-40.00	-13.75	-11.15	40.5	54.2	51.6
3	13.410	30.40	30.40	20.89	6.36	32.19	-40.00	-14.54	-14.54	40.5	55.0	55.0
4	13.456	30.40	31.30	20.90	6.36	32.19	-40.00	-14.53	-13.63	50.4	64.9	64.0
5	13.469	30.60	31.70	20.90	6.36	32.19	-40.00	-14.33	-13.23	50.4	64.7	63.6
6	13.472	30.40	32.00	20.90	6.36	32.19	-40.00	-14.53	-12.93	50.4	64.9	63.3
7	13.553	36.60	41.40	20.91	6.36	32.19	-40.00	-8.32	-3.52	50.4	58.7	53.9
6	13.567	38.10	43.30	20.91	6.36	32.19	-40.00	-6.82	-1.62	50.4	57.2	52.0
7	13.653	30.40	31.50	20.93	6.37	32.19	-40.00	-14.49	-13.39	50.4	64.8	63.7
8	13.668	30.20	31.10	20.93	6.37	32.19	-40.00	-14.69	-13.79	50.4	65.0	64.1
9	13.710	30.30	30.30	20.94	6.37	32.19	-40.00	-14.58	-14.58	40.5	55.0	55.0
10	13.772	30.70	32.90	20.95	6.37	32.19	-40.00	-14.17	-11.97	40.5	54.6	52.4
11	14.010	30.30	30.30	20.98	6.37	32.19	-40.00	-14.54	-14.54	29.5	44.0	44.0

Calculation:Result[dBuV/m]=Reading[dBuV]+Ant.Fac[dB/m]+Loss(Cable+ATT)[dB]-Gain(AMP)[dB]+Distance factor[dB]

Outside filed strength frequencies

・Fc±7 kHz: 13.553 MHz to 13.567 MHz

・Fc±150 kHz: 13.410 MHz to 13.710 MHz

・Fc±450 kHz: 13.110 MHz to 14.010 MHz

Fc = 13.56MHz

Limits (30 m)

・13.410 MHz to 13.553 MHz and 13.567 MHz to 13.710 MHz : 50.4 dBuV/m (FCC 15.225(b))

・13.110 MHz to 13.410 MHz and 13.710 MHz to 14.010 MHz : 40.5 dBuV/m (FCC 15.225(c))

・Below 13.110 MHz and Above 14.010 MHz : 29.5 dBuV/m (FCC 15.225(d)and FCC 15.209)

Radiated Emission

UL Japan, Inc.
Shonan EMC Lab. No.3 Semi Anechoic Chamber

Company:	Alpine Electronics, Inc.	Regulation:	FCC Part15 Subpart C 15.225	
Equipment:	Display Unit	Test Distance:	3 m	
Model:	GABI01	Date:	May 03, 2020	May 08, 2020
Sample No.:	1	Temperature:	23 deg.C	22 deg.C
Power:	DC 13.5 V	Humidity:	50 %RH	40 %RH
Mode:	Transmitting 13.56 MHz	ENGINEER:	Toshinori Yamad	Shiro Kobayashi
EUT axis:	Below 30 MHz, Tag Type 2, Vertical polarization (antenna angle) of the worst case: 90 deg Above 30 MHz, Tag Type 2			
Remarks:				

Polarity	Frequency [MHz]	Detector	Reading [dBuV]	Ant.Fac. [dB/m]	Loss [dB]	Gain [dB]	Distance Factor [dB]	Result [dBuV/m]	Limit [dBuV/m]	Margin [dB]	Height [cm]	Angle [deg.]	Remark
Hori.	27.12	QP	29.60	22.33	6.62	32.18	-40.0	-13.63	29.5	43.1	-	10	* Limit: 30 m
Hori.	40.68	QP	38.43	14.45	6.65	32.17	0.0	27.36	40.0	12.6	278	162	
Hori.	176.29	QP	31.77	16.17	7.81	32.06	0.0	23.69	43.5	19.8	173	35	
Hori.	195.296	QP	25.75	16.52	7.80	32.05	0.0	18.02	43.5	25.4	155	127	
Hori.	257.644	QP	39.22	12.09	8.30	31.98	0.0	27.63	46.0	18.3	131	264	
Hori.	865.665	QP	33.20	21.80	10.72	31.23	0.0	34.49	46.0	11.5	100	16	
Hori.	881.419	QP	32.23	21.95	10.76	31.15	0.0	33.79	46.0	12.2	100	2	
Hori.	908.54	QP	32.48	22.07	10.85	30.98	0.0	34.42	46.0	11.5	100	1	
Hori.	935.657	QP	31.00	21.98	10.93	30.76	0.0	33.15	46.0	12.8	100	3	
Hori.	962.782	QP	33.35	22.22	11.03	30.51	0.0	36.09	53.9	17.8	100	3	
Vert.	27.12	QP	29.50	22.33	6.62	32.18	-40.00	-13.73	29.5	43.2	-	15	* Limit: 30 m
Vert.	40.68	QP	46.35	14.45	6.65	32.17	0.00	35.28	40.0	**4.7**	100	88	
Vert.	67.80	QP	44.90	6.80	6.62	32.15	0.00	26.17	40.0	13.8	100	98	
Vert.	94.920	QP	40.31	9.09	7.44	32.14	0.00	24.70	43.5	18.8	100	102	
Vert.	153.912	QP	22.40	14.91	7.81	32.08	0.00	13.04	43.5	30.4	100	124	
Vert.	176.284	QP	31.46	16.17	7.81	32.06	0.00	23.38	43.5	20.1	100	1	
Vert.	257.646	QP	33.79	12.09	8.30	31.98	0.00	22.20	46.0	23.8	209	189	
Vert.	618.33	QP	29.77	19.50	9.86	31.94	0.00	27.19	46.0	18.8	100	223	
Vert.	865.67	QP	32.84	21.80	10.72	31.23	0.00	34.13	46.0	11.8	128	193	

Result = Reading + Ant Factor + Loss (Cable+ATT+ΔAF(above 30 MHz)) - Gain(Amprifier) + Distance factor(below 30 MHz)

* Other frequency noises omitted in this report were not seen or have enough margin (more than 20 dB).

* Carrier level (Result at 3 m): Hor= 44.1 dBuV/m, Ver= 51.2 dBuV/m

UL Japan, Inc.
Shonan EMC Lab.
1-22-3 Megumigaoka, Hiratsuka-shi, Kanagawa, Japan 259-1220
Telephone : +81 463 50 6400
Facsimile : +81 463 50 6401

Radiated Emission (Worst mode plot)

UL Japan, Inc.
Shonan EMC Lab. No.3 Semi Anechoic Chamber

Company:	Alpine Electronics, Inc.	Regulation:	FCC Part15 Subpart C 15.225	
Equipment:	Display Unit	Test Distance:	3 m	
Model:	GABI01	Date:	May 03, 2020	May 08, 2020
Sample No.:	1	Temperature:	23 deg.C	22 deg.C
Power:	DC 13.5 V	Humidity:	50 %RH	40 %RH
Mode:	Transmitting 13.56 MHz	ENGINEER:	Toshinori Yamad	Shiro Kobayashi
EUT axis:	Below 30 MHz, Tag Type 2, Vertical polarization (antenna angle) of the worst case: 90 deg Above 30 MHz, Tag Type 2			
Remarks:	These plots data contains sufficient number to show the trend of characteristic features for EUT.			

Spurious emission plot

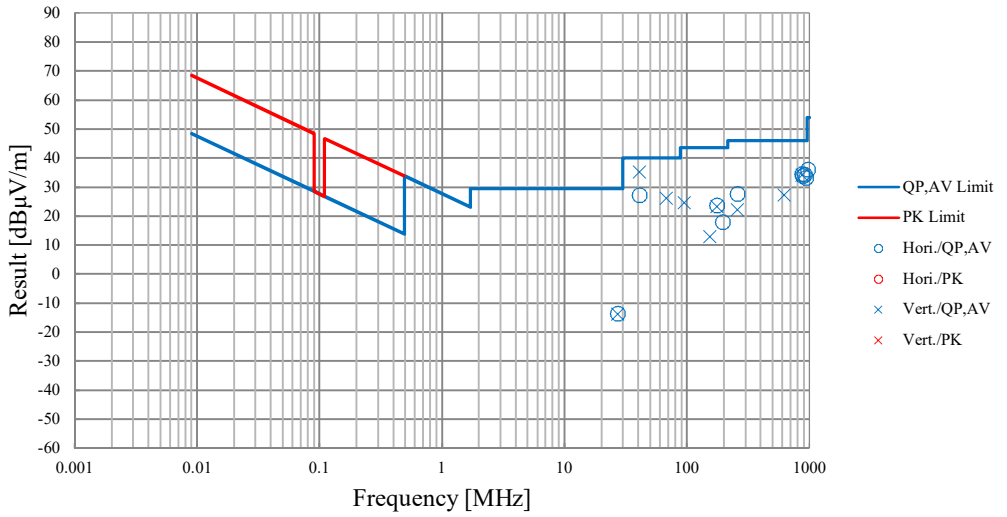

Within band plot

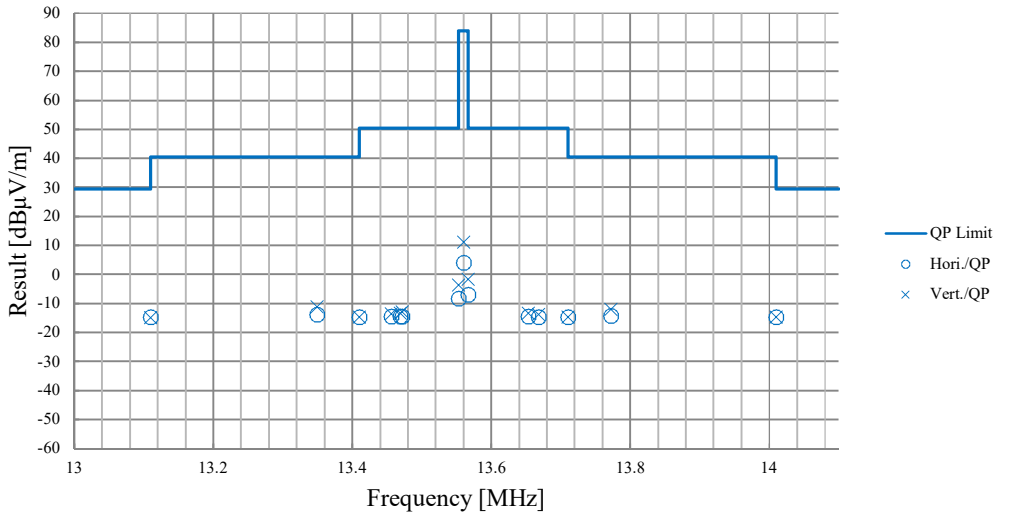

UL Japan, Inc.
Shonan EMC Lab.
1-22-3 Megumigaoka, Hiratsuka-shi, Kanagawa, Japan 259-1220
Telephone : +81 463 50 6400
Facsimile : +81 463 50 6401

APPENDIX 2: Test instruments

Test Instruments

Test Name	Local ID	LIMS ID	Description	Manufacturer	Model	Serial	Last Calibration Date	Calibration Interval (Month)
RE	COTS-SEMI-5	170932	EMI Software	TSJ	TEPTO-DV3(RE,CE,ME,PE)	-	-	-
RE	KBA-01	146343	Biconical Antenna	Schwarzbeck Mess - Elektronik	BBA9106	1748	2019/06/05	12
RE	KJM-02	146432	Measure	TAJIMA	GL19-55	-	-	-
RE	SAEC-03 (NSA)	145565	Semi-Anechoic Chamber	TDK	SAEC-03(NSA)	3	2020/04/12	12
RE	SAF-03	145126	Pre Amplifier	SONOMA	310N	290213	2020/02/19	12
RE	SAT6-13	167094	Attenuator	JFW	50HF-006N	-	2020/02/21	12
RE	SAT6-15	167096	Attenuator	JFW	50HF-006N	-	2020/02/21	12
RE	SCC-C1/C2/C3/C4/C5/C10/SRSE-03	145171	Coaxial Cable&RF Selector	Fujikura/Fujikura/Suhner/Suhner/Suhner/Suhner/TOYO	8D2W/12DSFA/141PE/141PE/141PE/141PE/NS4906	-/0901-271(RF Selector)	2020/04/12	12
RE	SCC-M1	194601	Coaxial Cable	Fjikura	5D-2W	-	2019/12/17	12
RE	SLA-05	145527	Logperiodic Antenna	Schwarzbeck Mess - Elektronik	VUSLP9111B	193	2020/04/04	12
RE	SOS-23	191840	Humidity Indicator	CUSTOM	CTH-201	-	2019/12/12	12
RE	STR-08	150463	Test Receiver	Rohde & Schwarz	ESW44	101581	2019/11/22	12
RE	STS-03	146210	Digital Hitester	Hioki	3805-50	80997823	2019/10/01	12
RE	TLP-05	174863	Loop Antenna	Rohde & Schwarz	HFH2-Z2	826532/009	2019/11/12	12

The expiration date of the calibration is the end of the expired month.
All equipment is calibrated with valid calibrations. Each measurement data is traceable to the national or international standards.

As for some calibrations performed after the tested dates, those test equipment have been controlled by means of an unbroken chains of calibrations.

Test item: RE: Radiated Emission test