# Camera Operation (Optional)

When an optional camera is connected, the video of the camera's view can be output to the monitor.
Front camera, Rear camera or Side camera can be connected to this unit. Make the Camera Select setting (Front, Rear, Side or Other) according to your connected camera. For details, see "Setting the Camera Input" (page 45).
When using the optional Multi Camera Interface module, you can connect up to 3 cameras: Front Camera, Rear Camera, and Side Camera. When connecting the optional Multi Camera Interface module, you need to set each camera to On/Off in "Setting Multi Camera to On/Off" (page 47).
When displaying the camera view while connected to the optional Multi Camera Interface module, you can switch the camera view using the switch button at the top of the screen.
For X409, when Off-Road is set to On (page 27), Off-Road Camera can be displayed. The Off-Road information is displayed on the Off-Road Camera screen.

**Front camera:**
When the HCE-C257FD is connected, conditions in front of the vehicle, such as objects, people and other hazards, can be seen.
**Rear camera:**
If an HCE-C127D/HCE-C157D/HCE-C252RD camera is connected, when the vehicle is reversed, the rear camera view (guide marks for vehicle width and available distance) is displayed automatically on the screen of this unit.
**Other camera:**
Set when connecting to a camera other than the Front camera or Rear camera, such as a room camera and side camera.

**You can adjust the quality of the camera image.**
**Setting items: Brightness / Color / Contrast**
**See "Picture Quality Setup" (page 37).**

## Rear Camera Operation

### Displaying the Rear Camera Image from the Menu screen

**1** **Press the MENU button.**
The menu screen is displayed.

**[Camera] button**

**2** **Touch [Camera].**
The Rear Camera view is displayed.

- *Touch the screen while the camera image is being displayed, and touch [✕] or [⮌] to return to the main source screen or previous screen.*
- *You can perform a Guide Adjustment. For details, see "Adjusting the Rear/Front/Side Camera Guide" (page 45).*
- *If you connect a Front Camera and Side Camera using the optional Multi Camera Interface module, you can display the Rear camera image using the **[Camera]** button only when you set "Setting a Default Camera" (page 47) to" Rear". If you connect a Front Camera and Side Camera at the same time, touch **[Front]** or **[Side]** in the Rear Camera image to switch the Camera image.*

### Displaying the rear view video while the car is in reverse

**1** **Shift the gear lever to the reverse (R) position.**
The rear view image is displayed while the car remains in reverse.

**2** **If you shift the gear lever to a position other than reverse (R), the monitor will display the front*1/*3 or rear*2/*3 view image for 10 seconds and then return to the previous screen.**

**1 Only when front camera is connected.*
**2 When there is no connected front camera.*
**3 When the vehicle is moving forward and the speed is greater than a certain value, the monitor will return to previous source screen automatically.*

- *Never depend solely on the camera when backing up. Always turn and look and only use the camera for additional assistance.*
- *This function is effective when the reverse wire is properly connected.*
- *If you use the optional Multi Camera Interface module, be sure to set Rear Camera in "Setting Multi Camera to On/Off" (page 47) to "On" (☑). If setting to "Off" (☐), you cannot display the Rear camera image.*
- *If you set to Front or Side in "Setting a Default Camera" (page 47), the Rear camera image is also displayed.*
- *You can perform a Guide Adjustment. For details, see "Adjusting the Rear/Front/Side Camera Guide" (page 45).*

### Switching the Image for the Rear Camera

If the camera has a view switch function, the Direct Change switch is displayed.

**1** **Touch the screen when the image from the rear camera is displayed.**
The operation screen is displayed on the screen.
- *After a 5-second time-out, the operation screen returns to the camera display screen.*

**2** **Touch [Back], [Panorama], [Corner] or [Top].**
The image pattern changes.

| | |
|---|---|
| [Back]: | Rear View |
| [Panorama]: | Panorama View |
| [Corner]: | Corner View |
| [Top]: | Ground View |

- *For detailed information about image patterns, see the camera Owner's Manual.*
- *You can perform a Guide Adjustment. For details, see "Adjusting the Rear/Front/Side Camera Guide" (page 45).*

### Guide Display ON/OFF Setting

**1** **Touch the screen when the image from the camera is displayed.**
The operation screen is displayed on the screen.
- *After a 5-second time-out, the operation screen returns to the camera display screen.*

**2** **Touch [Guide Off] or [Hitch Guide Off] on the Rear camera display screen.**
The guide disappears, and then the **[Guide Off]** or **[Hitch Guide Off]** switch changes to **[Guide On]** or **[Hitch Guide On]**.

**3** **Touch [Guide On] or [Hitch Guide On] to turn on the guide.**

## Adjusting the Caution Display Location

**1** **Touch the screen when the image from the camera is displayed.**
The operation screen is displayed on the screen.
- *After a 5-second time-out, the operation screen returns to the camera display screen.*

**2** **Touch [⇕ Caution].**

- *For each touch, the caution location moves to the top or bottom of the screen.*

# About the Rear Camera Guide

To display the guide, set "Guide Display ON/OFF Setting" (page 87) to On. Also, to adjust the guide, see "Adjusting the Rear/Front/Side Camera Guide" (page 45). You can also turn off the guide in the Rear camera display screen.

### ■ Indication mark meaning

When the car is put into reverse gear, the monitor switches to the rear view camera image. Guides appear to help visualize the car's width and distance from the rear bumper.

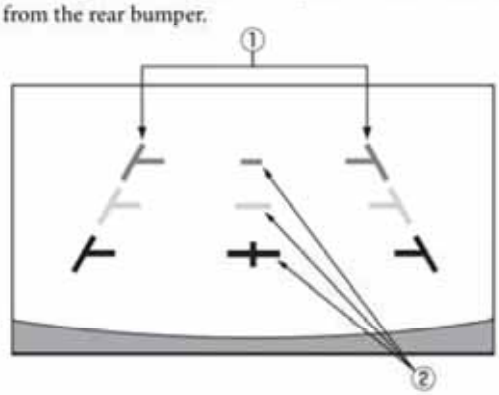


① **Car width extension marks (red, yellow and green in order of distance)**
If properly calibrated, the marks indicate the car's width. This helps guide the car's path when backing up in a straight line.

The marks represent the distance from the rear of the car (from the rear end of the bumper).
- The marks do not move in synchronization with the steering wheel.
- Set the marks to suit the car's width.

② **Distance guidance marks**
The marks represent the distance from the rear of the car (from the rear end of the bumper).
- The marks do not move in synchronization with the steering wheel.
- We recommend that you measure the actual distance to the marks when parked on a level surface.

- *Depending on the condition of the car or road surface, the range of vision may vary.*
- *The camera has a limited range of vision. Objects at extreme angles to the camera (e.g. under the bumper or at opposite ends of the bumper) may not be in the its field-of-vision.*
- *The rear camera image may have a tint which is different from the actual surroundings.*
- *Depending on the car, the guidance may deviate to the right or left. This is not a malfunction.*

### ■ Distance guidance mark

The distance guides represent the ground level distance from the rear bumper. It is difficult to accurately estimate the distance to objects above ground level.

In the following example, the distance to A is 0.5 m and the distance to B is 1 m.

<Screen>

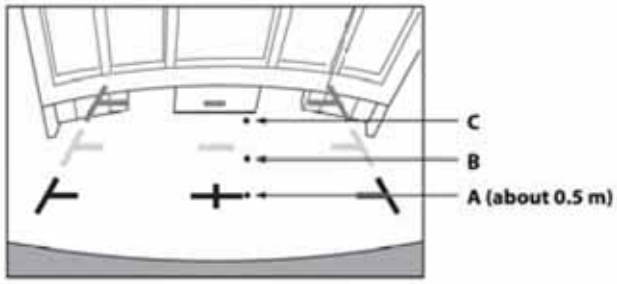


<Positions of A, B and C>

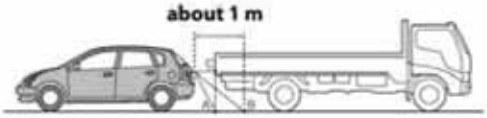


**In the screen, according to the distance guidance marks, the truck seems to be parked about 1 m away (at the position B). In actual fact, however, if you reversed to position A, you would collide with the truck.**
**In the screen, positions A, B and C seem to be located in order of proximity. However, in actual fact, the position A and C are the same distance, and B is farther away than positions A and C.**

- *The car width extension mark represents the distance to the road surface. The distance to an object on the road is not accurately represented by the guides.*

#### Error between the screen and the actual road surface

In the following conditions, errors are produced between the screen guidance and the actual road surface. (The illustrations represent a case when the camera is installed in the standard position.)

### ■ When there is a steep upward slope behind the car (example)

<Screen>

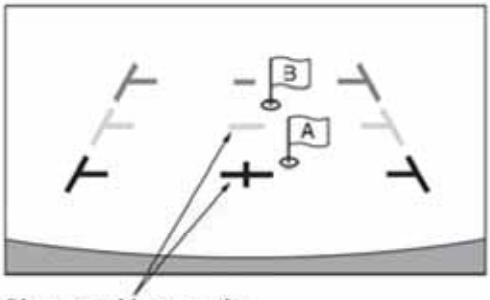


**Distance guidance marks**

<Situation of the car>

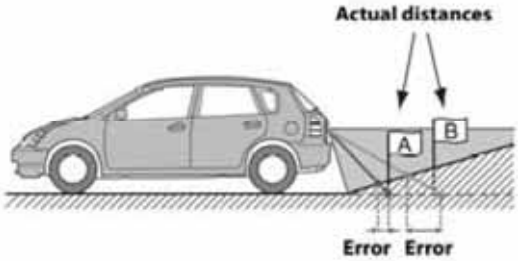


**The distance guidance mark represents the distance to a flat road surface. Therefore in the case of an upward slope behind the car, the distance guides are displayed closer to the rear bumper than the actual distance. For example, if there is an obstacle on the upward slope, it may appear farther away than its actual position.**
**Also, an error may occur between the guidance and the actual path of the car on the road surface.**

### ■ When there is a steep downward slope behind the car (example)

<Screen>

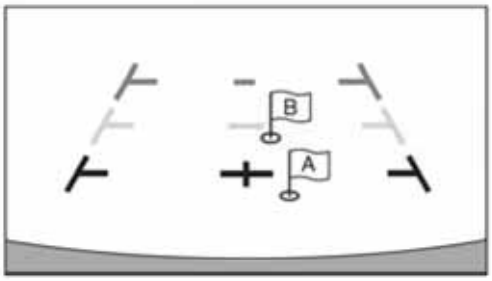


<Situation of the car>

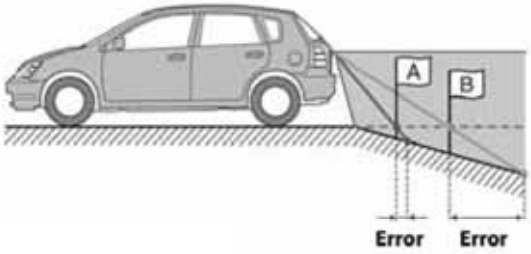


**In the case of a downward slope behind the car, the distance guides are displayed farther from the rear bumper than the actual distance.**
**If there is an obstacle on the downward slope, it seems closer than its actual position.**
**Also, an error may occur between the guidance and the actual path of the car on the road surface.**

# Front Camera Operation

## Displaying the Front Camera image from the Menu screen.

**1 Press the MENU button.**
The menu screen is displayed.

**2 Touch [Camera].**
The Front Camera view is displayed.

- *Touch the screen while the camera image is being displayed, and touch [✕] or [⟪] to return to the main source screen or previous screen.*
- *You can perform a Guide Adjustment. For details, see "Adjusting the Rear/Front/Side Camera Guide" (page 45).*
- *If you connect a Front Camera using the optional Multi Camera Interface module, you can display the Front camera image using the **[Camera]** button only when you set "Setting a Default Camera" (page 47) to "Front". If you connect a Rear Camera and Side Camera at the same time, touch **[Rear]** or **[Side]** in the Rear Camera image to switch the Camera image.*

## Switching the Image Pattern for the Front Camera

If the camera has a view switch function, the Direct Change switch is displayed.

**1 Touch the screen when the image from the front camera is displayed.**
The operation screen is displayed on the screen.
- *After a 5-second time-out, the operation screen returns to the camera display screen.*

**2 Touch [Panorama], [Corner] or [Top].**
The image pattern changes.

[Panorama]: Panorama View
[Corner]: Corner View
[Top]: Ground View

- *For detailed information about image patterns, see the camera Owner's Manual.*
- *You can perform a Guide Adjustment. For details, see "Adjusting the Rear/Front/Side Camera Guide" (page 45).*

### About the adjustment of guide display ON/OFF setting and adjustment of Caution display location

As with the rear camera, the front camera guide display ON/OFF setting and Caution display location can be adjusted. See "Guide Display ON/OFF Setting" (page 87) and "Adjusting the Caution Display Location" (page 88) for the operations.

## Side Camera Operation

### Displaying the Side Camera image from the Menu screen.

**1** **Press the MENU button.**
The menu screen is displayed.

**[Camera] button**

**2** **Touch [Camera].**
The Side Camera view is displayed.

- *Touch the screen while the camera image is being displayed, and touch [✕] or [《] to return to the main source screen or previous screen.*
- *You can perform a Guide Adjustment. For details, see "Adjusting the Rear/Front/Side Camera Guide" (page 45).*
- *If you connect a Side Camera using the optional Multi Camera Interface module, you can display the Side camera image using the **[Camera]** button only when you set "Setting a Default Camera" (page 47) to "Side". If you connect a Rear Camera and Front Camera at the same time, touch **[Rear]** or **[Front]** in the Rear Camera image to switch the Camera image.*

### Switching the Image Pattern for the Side Camera

If the camera has a view switch function, the Direct Change switch is displayed.

**1** **Touch the screen when the image from the side camera is displayed.**
The operation screen is displayed on the screen.

- *After a 5-second time-out, the operation screen returns to the camera display screen.*

**2** **Touch [Rear] or [Front].**
The image pattern changes.

| | |
|---|---|
| Rear: | Vehicle Rear view |
| Front: | Vehicle Front view |

- *For detailed information about image patterns, see the camera Owner's Manual.*
- *You can perform a Guide Adjustment. For details, see "Adjusting the Rear/Front/Side Camera Guide" (page 45).*

## Off-Road Camera Operation (X409 only)

When Off-Road Mode is On, Off-Road Camera can be activated.

### Off-Road Rear Camera Operation

#### Displaying the Off-Road Rear Camera screen

**1** **Press the MENU button.**

**[Camera] button**

**2** **Touch [Camera].**
The Off-Road Camera screen is display.

- *You can activate Off-Road Camera by pressing the [Source/Camera View] button once. This requires "Off-Road SWRC" to be set to "Camera". For details, see "Off-Road SWRC Settings (X409 only)" (page 40).*
- *If you connect an optional Multi Camera Interface module, when the gear lever is shifted to the reverse (R) position and the reverse image is displayed, you can touch [CAM]/[VIEW] to switch camera or image pattern.*

#### ■ Multi-view camera display example

### Changing the Off-Road Camera View

If a multi-view camera is connected, a **[VIEW]** button to cycle the view (Panorama/Back/Top/Corner) will be displayed at the bottom of the camera screen.

**1 Touch the camera screen while the Off-Road Camera screen is active.**

The multi-view camera and accessory controller buttons become visible. (Only if these accessories are connected.)

- *The camera and accessory controller buttons will be cleared from the camera screen after 5 seconds of no interaction.*

**2 Touch [VIEW] to cycle the camera view.**

Panorama View
Back View
Top View
Corner View

- *You can also cycle the camera view by pressing the [Source/Camera View] button on the steering wheel, only when you set "Off-Road SWRC Settings" to "Camera". For details, see "Off-Road SWRC Settings (X409 only)" (page 40).*

## Off-Road Front Camera Operation

### Displaying the Off-Road Front Camera screen

**1 Press the MENU button.**

**[Camera] button**

**2 Touch [Camera].**

The Off-Road Front Camera view is displayed.

- *You can also activate the Off-Road front camera by pressing the [Source/Camera View] button on the steering wheel, only when you set "Off-Road SWRC Settings" to "Camera". For details, see "Off-Road SWRC Settings (X409 only)" (page 40).*

### Changing the Front Off-Road Camera View

The **[VIEW]** button displays if a multi-view camera is connected.

**1 Touch the camera screen while the Off-Road front camera screen is active.**

The multi-view camera and accessory controller buttons become visible. (Only if these accessories are connected.)

- *The camera and accessory controller buttons will be cleared from the camera screen after 5 seconds of no interaction.*

**2 Touch [VIEW] to change the camera view.**

Panorama View
Top View
Corner View

- *You can also cycle the Off-Road Camera view by pressing the [Source/Camera View] button on the steering wheel, only when you set "Off-Road SWRC Settings" to "Camera". For details, see "Off-Road SWRC Settings (X409 only)" (page 40).*

## Off-Road Side Camera Operation

### Displaying the Off-Road Side Camera screen

**1 Press the MENU button.**

**[Camera] button**

**2 Touch [Camera].**

The Off-Road Side Camera view is displayed.

- *You can also activate the Off-Road side camera by pressing the [Source/Camera View] button on the steering wheel, only when you set "Off-Road SWRC Settings" to "Camera". For details, see "Off-Road SWRC Settings (X409 only)" (page 40).*

### Changing the Side Off-Road Camera View

The **[VIEW]** button displays if a multi-view camera is connected.

**1 Touch the camera screen while the Off-Road side camera screen is active.**

The multi-view camera and accessory controller buttons become visible. (Only if these accessories are connected.)

- *The camera and accessory controller buttons will be cleared from the camera screen after 5 seconds of no interaction.*

**2 Touch [VIEW] to change the camera view.**

Rear View
Front View

- *You can also cycle the Off-Road Camera view by pressing the [Source/Camera View] button on the steering wheel, only when you set "Off-Road SWRC Settings" to "Camera". For details, see "Off-Road SWRC Settings (X409 only)" (page 40).*

## Changing the Camera Source

The [CAM] button will displayed at the bottom of the camera screen when the Alpine multi-camera selector (KCX-C250MC) is connected.

**1 Touch the camera screen while the Off-Road Camera screen is active.**

The multi-view camera and accessory controller buttons become visible. (Only if these accessories are connected.)

- *The camera and accessory controller buttons will be cleared from the camera screen after 5 seconds of no interaction.*

**2 Touch [CAM] to cycle the camera source.**

: Off-Road Front Camera
: Off-Road Rear Camera
: Off-Road Side Camera

## About the Off-Road Camera information

When the Off-Road Camera screen is displayed, Guidelines display when the Off-Road Camera screen is active.

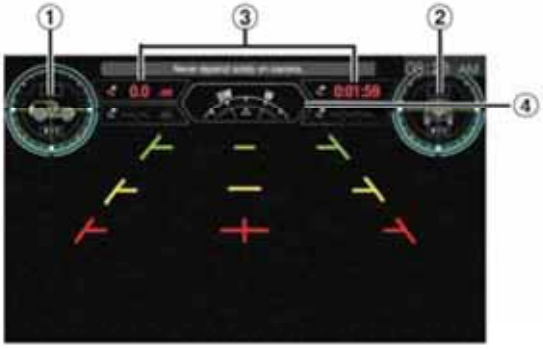


① **Vehicle Pitch angle**

If properly calibrated, the value represents the vehicle pitching angle.

When the Pitching angle is greater/lower than Inclinometer set value, alert is displayed.

| | |
|---|---|
| Green Normal: | When the vehicle's pitching angle lower than the lower limit Alarm value. |
| Yellow Low Alert: | When the vehicle's pitching angle equal or over the lower limit Alarm value, but lower than the upper limit Alarm value. |
| Red High Alert: | When the vehicle's pitching angle equal or over the upper limit Alarm value. |

- *Long press Vehicle Pitching angle area, Inclinometer Setup is displayed when your vehicle is parked.*
- *The Pitching angle data is from iDataLink.*
- *For alert value setting, see "Inclinometer Setup (X409 only)" (page 40).*

② **Vehicle Roll angle**

If properly calibrated, the value represents the vehicle rolling angle.

When the Rolling angle is greater/lower than Inclinometer set value, alert is displayed.

| | |
|---|---|
| Green Normal: | When the vehicle's rolling angle lower than the lower limit Alarm value. |
| Yellow Low Alert: | When the vehicle's rolling angle equal or over the lower limit Alarm value, but lower than the upper limit Alarm value. |
| Red High Alert: | When the vehicle's rolling angle equal or over the upper limit Alarm value. |

- *Long press Vehicle Rolling angle area, Inclinometer Setup is displayed when your vehicle is parked.*
- *The Rolling angle data is from iDataLink.*
- *For alert value setting, see "Inclinometer Setup (X409 only)" (page 40).*

③ **Tracking, Back Tracking information**

| | |
|---|---|
| When tracking: | Top: the distance/Time of tracking<br>Below: --.--/--:--:-- |
| When Back Tracking: | Top: the distance/Time of Back Tracking<br>Below: the distance/Time of tracking before Back Tracking |

④ **Compass with direction of travel arrow**

The vehicle position information is displayed.

There are 16 compass points in total: N, NE, E, SE, S, SW, W, NW, NNW, NWW, SEE, SSE, SWW, SSW, NNE, NEE.

Touch ① or ② to switch display contents.

⑤ **Battery Voltage**

⑥ **Latitude/Longitude**

Touch ① or ② to switch display contents.

⑦ **Tire Pressure**

The Tire Pressure for Front-Left/Rear-Left/Front-Right/Rear-Right is displayed.

⑧ **The first two control switches from External Accessory screen***

The first two items of information from External Accessory screen are displayed in the lower left and right of the camera screen.

For details on External Accessory screen, see "External Accessory Control Operation" (page 96).

* *Displayed only when iDataLink module is connected.*

- *The Off-Road Camera guide line is same as the normal camera guide line.*
- *For Off-Road Camera, there is no [Guide On/Off], [⬍ Caution], [Hitch Guide On/Off], [✕] and [⟪] displayed on the camera screen.*

# iDataLink Operation

When the unit is connected to the car's iDataLink module, you can transfer and receive data between the car and the unit to check the car's status, or to make various operations from the unit.
When you use iDataLink mode, set each setting other than "Aftermarket" in "Setting the Source Category" (page 47).

- *An iDataLink module (sold separately) is required.*
- *Available functions differ depending on your vehicle. For details, refer to your vehicle's instruction manual.*

### About Audio Interrupt

Audio Interrupt is the function that outputs sound from the unit when Voice Information (audio reading from the phone book, etc.)* from the vehicle occurs.

- *The Audio Interrupt function of the vehicle differs depending on the type and grade of the vehicle.*

* *For your safety, when interrupted with Voice Information, you cannot operate the buttons on the front panel or the touch buttons on the display, except for some operations.*
  - *The operating restrictions may differ depending on which mode the unit is in during Voice Information.*
  - *You can use the +/− or ∨/∧ (DOWN/UP) button to control the volume of Voice Information.*
  - *Operation of the Remote Control unit (sold separately) is also restricted.*

## Access to iDataLink Mode

You can check the car's status, set the air conditioning, etc.

**1 Press and hold the ★ (Favorite) button or touch [ ] (Vehicle Info.) in the Menu screen to activate iDataLink mode.**

- *The iDataLink mode screen selected in "Setting the Default Vehicle Screen" (page 47) is displayed.*

**2 Touch the desired tag on the top of the screen.**

***Select item:***
*Climate / Gauges / Park Sensor / Vehicle Info. / Car Setting*

- *The displayed tag options differ depending on the type of vehicle.*

### ■ Climate screen example

**3 Adjust or confirm the item/information accordingly.**

- *Operable functions and displays may differ depending on the vehicle.*

### iDataLink Function Screen example

### ■ Climate screen example

You can control the temperature inside the vehicle, etc.

### ■ Gauges screen example

You can check the vehicle's speed, the engine's rotation speed, etc.

### ■ Parking sensor screen example

You can check the distance from the front and rear of the vehicle to an obstacle.

- *If the car sensor detects an obstacle, the screen automatically changes to the Parking sensor screen. For details, see "About Parking Sensor screen" (page 95).*

### ■ Vehicle Information screen example

You can check for open doors, check the tire pressure, the battery life, etc. for the vehicle.

### ■ Car Setting screen example (Generic List screen)

The Generic List/Popup Window/Current source control screen is displayed.

## About Parking Sensor screen

The Parking sensor screen turns on when the front or rear sensor on your vehicle detects an obstacle within a certain distance.

### Parking Sensor Full screen example

When the front or rear sensor detects an obstacle within a certain distance, the Parking Sensor screen is displayed, and the indicator (①-⑧) that corresponds with that area lights up.

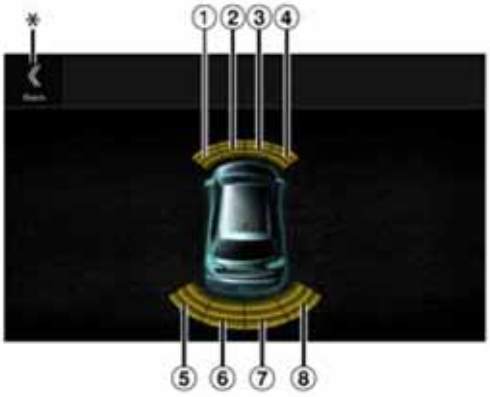


***Indicator colors when an obstacle is detected.***

*Red: close distance*
*Orange: medium distance*
*Yellow: long distance*

- *Depending on the speed of the vehicle, when moving faster than a certain speed, the Parking Sensor screen may not be displayed.*
- *Vehicles that do not have the obstacle detection sensor cannot use this function.*

* *[《] is displayed only when the Front camera or Rear camera is interlocked.*

### Parking Sensor Camera interlock screen example (Rear camera)

You can check for obstacles through an interlocked camera image by connecting a Front or Rear Camera.

- *Touch the Camera image area to switch to the Camera full screen. (While displaying the Camera full screen, touch the Camera screen, then touch **[Sensor]** to return to the Parking Sensor Camera interlock screen.)*
- *Touch the car icon to switch to the Parking sensor full screen. (Touch [《] on the Parking Sensor full screen to return to the Parking Sensor Camera interlock display.)*
- *To use this function, set the Camera Select setting to "Front/Other" or "Rear." For details, see "Setting the Camera Input" (page 45).*
- *If you connect a Front Camera/Rear Camera/Side Camera using the optional Multi Camera Interface module, you can switch the Camera display. For details on the camera settings when connected to the Multi Camera Interface module, see "Setting Multi Camera to On/Off" (page 47). For details on how to switch the camera display, see "Camera Operation (Optional)" (page 87).*

## External Accessory Control Operation

You can set the headlights to ON/OFF or adjust the air suspension from this unit by connecting the optional External Accessory Control module.

- *In order to keep external accessory control outputs on during the ignition cycle, please change "Accessory During Crank" to "On". Otherwise all switches will be turned off.*
  *[Setup] → [System] → [Factory System Setup] → [Maestro Module] → [Maestro Features] → [Maestro Module] → [Accessory During Crank] → "On"*

The following explains how to edit the control switches, because the functions that can be controlled differ depending on the type of vehicle.

**You cannot edit the External Accessory screen while driving.**
Your vehicle must be parked with the ignition key in the ACC or ON position. For details, see "To display the Setup Menu screen" in "Setup Operation" (page 28).

**1 Touch [Ext Acc Ctrl] in the Menu screen to activate External Accessory screen.**
The External Accessory screen is displayed.

**2 Touch [ ] (Edit).**
The Edit Control Switches screen is displayed.

**3 Edit each switch.**

**When changing an icon:**
Touch the icon, and select your desired icon from the Icon Type list. After selecting the icon, set the Output Type (Timing) for each function.

* *The Output Type (Timing) sets the operating time for that function when you touch the icon on the External Accessory screen.*

Pulse: The operating time when you touch the icon. (Select from 11 steps, ranging 0.5 sec. to 10 sec.)
Latch: Switch On/Off by touching the icon.
Momentary: Operating time lasts from when an icon is touched to when it is released.

**When changing the name:**
Touch the icon name, then input characters into Edit Name (Keypad). You can also select a basic name from the [Template] of the Keypad. For details on how to input characters using the keypad, see "How to Input Characters and Numbers (Keypad)" (page 23). (When a basic name is selected from the Template, the icon will be changed according to the basic name.)

**When changing the layout of the switches:**
Drag and drop an icon to the desired location.

**To revert to a default icon:**
Touch the check box "☑" of the icon that you want to revert to default, and then touch [ ] (Reset). If you touch [ ] (Reset All), all icons revert to default icons.

**4 After editing is complete, touch [《] (Back).**

**5 After the caption for the confirmation is displayed, touch [OK].**

- *If you touch [ ] **(Cancel)** while editing, the edits are reset and the screen returns to the previous Edit screen.*
- *The first two control switches of External Accessory screen will be synchronized onto Off-Road Camera screen. For details, see "About the Off-Road Camera information" (page 92).*

# Information

## Product Software Update

This product use software that can be updated through a USB flash drive. Download the software from the Alpine website and update the product using the USB flash drive.

### Updating this product

Check the Alpine website for details on updating.

http://www.alpine-usa.com

### Important information on the software

**About the software license of the product**

The software installed in the product contains open-source software. See the following Alpine website for details on the open source software.

http://www.alpine.com/e/oss/download

## About the Supported Formats

### About MP3/WMA/AAC/FLAC

⚠ **CAUTION**

**Except for private use, duplicating audio data (including MP3/WMA/AAC/FLAC data) or distributing, transferring, or copying it, whether for free or for a fee, without permission of the copyright holder is strictly prohibited by the Copyright Act and by international treaty.**

***What is MP3?***

MP3, whose official name is "MPEG Audio Layer 3," is a compression standard prescribed by the ISO, the International Standardisation Organisation and MPEG which is a joint activity institution of the IEC.

MP3 files contain compressed audio data. MP3 encoding is capable of compressing audio data at extremely high ratios, reducing the size of music files to as much as one-tenth their original size. This is achieved while still maintaining near CD quality. The MP3 format realizes such high compression ratios by eliminating the sounds that are either inaudible to the human ear or masked by other sounds.

***What is WMA?***

WMA, or "Windows Media™ Audio," is compressed audio data. WMA is similar to MP3 audio data.

***What is AAC?***

AAC is the abbreviation for "Advanced Audio Coding," and is a basic format of audio compression used by MPEG2 or MPEG4.

***What is FLAC?***

FLAC (Free Lossless Audio Codec) is an audio file codec for lossless compression, developed and offered as open source software. Codecs with lossy compression forms, such as MP3 and AAC, reduce part of the data to improve compression efficiency.
However, FLAC can reconstruct compressed data to be an identical copy of the original data by performing lossless compression. The compression ratio of FLAC is about 50%.

***Method for creating MP3/WMA/AAC/FLAC (USB Flash drive) files***

Audio data is compressed using software with MP3/WMA/AAC/FLAC (USB Flash drive) codecs. For details on creating MP3/WMA/AAC/FLAC (USB Flash drive) files, refer to the user's manual for that software.
MP3/WMA/AAC/FLAC (USB Flash drive) files that are playable on this device have the file extensions.
MP3: "mp3"
WMA: "wma"
AAC: "m4a"
FLAC: "flac"/"fla"
WMA is not supported for the following files, Windows Media Audio Professional, Windows Media Audio 10 std or Windows Media Audio 10 Pro Lossless.

There are many different versions of the AAC format. Confirm that the software being used conforms to the acceptable formats listed above. It's possible that the format may be unplayable even though the extension is valid.
Playback of AAC files encoded by iTunes is supported.

***Supported playback sampling rates and bit rates***

MP3 (USB Flash drive/Disc)
Sampling rates: 48 kHz, 44.1 kHz, 32 kHz, 24 kHz, 22.05 kHz, 16 kHz, 12 kHz, 11.025 kHz, 8 kHz
Bit rates: 8 - 320 kbps

WMA (USB Flash drive/Disc)
Sampling rates: 48 kHz, 44.1 kHz, 32 kHz, 22.05 kHz, 16 kHz, 11.025 kHz, 8 kHz
Bit rates: 5 - 384 kbps

AAC (USB Flash drive/Disc)
Sampling rates: 48 kHz, 44.1 kHz, 32 kHz, 24 kHz, 22.05 kHz, 16 kHz, 12 kHz, 11.025 kHz, 8 kHz
Bit rates: 16 - 320 kbps

FLAC (USB Flash drive)
Sampling rates: 96kHz, 88.2kHz, 48kHz, 44.1kHz, 32kHz, 24kHz, 22.05kHz, 16kHz, 8kHz
Channel number: 1ch, 2ch

This device may not play back correctly depending on sampling rates.

***ID3 tags/WMA tags***

This device supports ID3 tag v1.0, v1.1, v2.2, v2.3, v2.4, and WMA tag Ver.1.x. If tag data is in an MP3/WMA/AAC file, this device can display the title (track title), artist name, and album name ID3 tag/WMA tag data.
For non-supported characters, "?" is displayed.
The number of characters may be limited, or not correctly displayed, depending on the tag information.

***Playing back MP3/WMA/AAC/FLAC***

MP3/WMA/AAC files are prepared, then written to a USB flash drive.
- Maximum numbers of playable files/folders
  USB Flash drive: 10,000 files/folders (including Root Folder)
- Largest playable file size: 512 MB

Playback may not be performed if a disc exceeds the limitations described above.
If a file/folder name is long, the maximum possible number of files may decrease.
- Both Audio and Video files are counted if their formats are playable on this unit.

***Media supported***

The media that this device can play back a USB flash drive.

***Corresponding File Systems***

This device supports FAT 16/32.

The maximum nested folder depth is 8 (including the root directory). File names are limited to 256 characters (including the extension).

Valid characters for folder/file names are letters A-Z (all caps), numbers 0-9, and '_' (underscore).

***Order of files***

Files are played back in the order that the writing software writes them to the disc. Therefore, the playback order may not be what's expected. Verity the writing order in the software's documentation. The playback order of the folders and files is as follows. (The following numbers may differ from actually displayed numbers.)

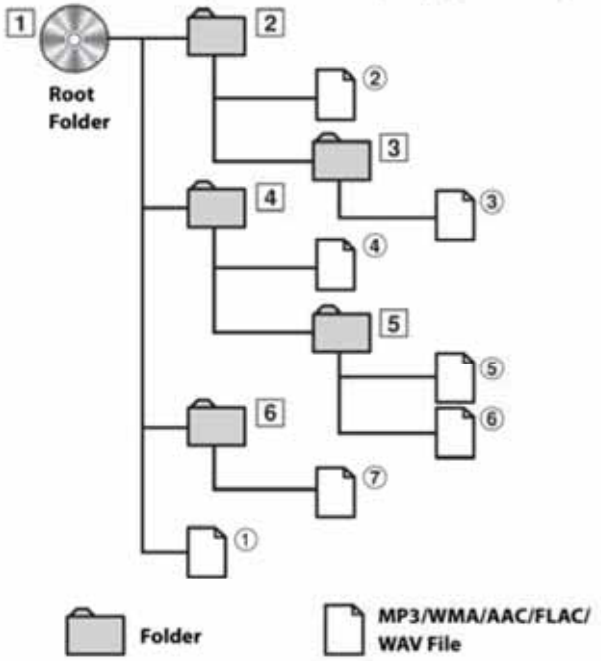


## Terminology

***Bit rate***

*This is the "sound" compression rate specified for encoding. The higher the bit rate, the higher the sound quality, but also the larger the files.*

***Sampling rate***

*This value shows how many times per second the data is sampled (recorded). For example, music CDs use a sampling rate of 44.1 kHz, so the sound is sampled (recorded) 44,100 times per second. The higher the sampling rate, the higher the sound quality, but also the larger the volume of data.*

***Encoding***

*Converting music CDs, WAVE (AIFF) files, and other sound files into the specified audio compression format.*

***Tag***

*Song information such as track titles, artist names, album names, etc., written into MP3/WMA/AAC/FLAC (USB flash drive) files.*

***Root folder***

*The root folder (or root directory) is found at the top of the file system. The root folder contains all folders and files. It is created automatically for all burned discs.*

## About WAV (Disc)

WAV, whose official name is "WAVE FORMAT" is a standard format of Windows* audio file.

Extension: ".wav"
Sampling rate: 44.1 kHz
Quantization bit number: 16
Channel number: up to 2ch
Format: PCM only

# In Case of Difficulty

**If you encounter a problem, please turn the power off, then on again. If the unit is still not functioning normally, please review the items in the following checklist. This guide will help you isolate the problem if the unit is at fault. Otherwise, make sure the rest of your system is properly connected, or then consult your authorized Alpine dealer.**

## Basic

### No function or display.

- Vehicle's ignition is off.
  - If connected according to the instructions, the unit will not operate with the vehicle's ignition off.
- Improper power lead connections.
  - Check power lead connections.
- Blown fuse.
  - Check the fuse on the battery lead of the unit; replace with the proper value if necessary.
- Internal micro-computer malfunctioned due to interference noise, etc.
  - Press the RESET switch with a ballpoint pen or other pointed article.

### No sound or unnatural sound.

- Incorrect setting of volume/balance/fader controls.
  - Readjust the controls.
- Connections are not properly or securely made.
  - Check the connections and firmly connect.

### Screen not displayed.

- Brightness/Contrast control is set at the minimum position.
  - Adjust the Brightness/Contrast control.
- Temperature in the vehicle is too low.
  - Increase the vehicle's interior temperature to operation temperature range.
- Connections to the Auxiliary Device are not securely made.
  - Check the connections and firmly connect.
- The Parking Brake Lead is not connected.
- The Parking Brake is not engaged.
  - Connect the Parking Brake Lead, then engage the Parking Brake.

### Movement of displayed picture is abnormal.

- Temperature in the vehicle is too high.
  - Allow the vehicle's interior temperature to cool.

### The optional remote control is inoperative.

- The remote control sensor setting of "Remote Sensor Setting" (page 48) is not set to this unit ("Front").
  - Set for "Front".

## Radio

### Unable to receive stations.

- No antenna, or open connection in the antenna cable.
  - Make sure the antenna is properly connected; replace the antenna or cable if necessary.

### Unable to tune stations in the seek mode.

- You are in a weak signal area.
  - Make sure the tuner is in DX mode.
- If the area you are in is a primary signal area, the antenna may not be grounded and connected properly.
  - Check your antenna connections; make sure the antenna is properly grounded at its mounting location.
- The antenna may not be the proper length.
  - Make sure the antenna is fully extended; if broken, replace the antenna with a new one.

### Broadcast is noisy.

- The antenna is not the proper length.
  - Extend the antenna fully; replace it if it is broken.
- The antenna is poorly grounded.
  - Make sure the antenna is grounded properly at its mounting location.
- The station signal is weak and noisy.
  - If above solution does not work, tune in another station.

## USB Audio

### Unit does not operate.

- Condensation.
  - Wait a while (about 1 hour) for the condensation to dry.

### Picture is unclear or noisy.

- Vehicle's battery power is weak.
  - Check the battery power and wiring.
    (The unit may malfunction if the battery power is under 11 volts with a load applied.)

## Rear Seat Entertainment System

### DVD sound is not being output from the rear monitor headphones.

- The external audio processor and DVD Player (DVE-5300) are optically connected.
  - Set the Audio Out of the DVD Player to "LPCM."

## Navigation

### The Navigation cannot work properly.

- Reset Navigation system.
  - Turn the ignition key off, and then set to ON again.

## If this Message Appears

Various messages are displayed on the screen during operation. In addition to the messages telling you the current status or providing guidance for the next operation, there are also the following error messages. If one of these error messages is displayed, carefully follow the instructions in the solution column.

### System

**If you are driving, please pull over and park before using this function.**

- A setup operation, etc., was carried out while the vehicle was running.
  - Move the vehicle to a safe location, stop, and engage the parking brake, then carry out this operation.

**Over-current detected on the USB.**

- Abnormal current is run to the USB connector device.
  - Turn the ignition key off, and then set to ON again.
  - Attempt to connect another iPod/iPhone/USB Flash drive.

**USB Hub is not supported.**

- A USB flash drive with a hub is connected.
  - You cannot play back from a USB flash drive with a hub. USB hub connections are also not supported.

### Audio/Visual

**Connected USB Device is not compatible.**

- An iPod/iPhone that is not supported by the unit is connected.
  - Connect an iPod/iPhone that is supported by the unit.
  - Reset the iPod.
- A USB device that is not supported by the unit is connected.
  - Attempt to connect another USB flash drive.
- Communication error.
  - Turn the ignition key off, and then set to ON again.
  - Check the display by reconnecting between the iPod/iPhone and the unit, using the iPod/iPhone cable.
  - Check the display by reconnecting between the USB flash drive and the unit.
- Caused by the iPod/iPhone Software Version not being compatible with this unit.
  - Update the iPod/iPhone Software Version to be compatible with this unit.
- The iPod/iPhone is not verified.
  - Change to another iPod/iPhone.

**No data.**

- There are no data in the iPod/iPhone.
  - Download data to the iPod/iPhone and connect to the unit.
- There are no data in the USB flash drive.
  - Download data to the USB flash drive and connect to this unit.

**Un-readable song was skipped.**

- A copy-protected WMA file has been detected.
  - You can only play back non-copy-protected files.
- A sampling rate/bit rate not supported by the unit is used.
  - Use a sampling rate/bit rate supported by the unit.

### Bluetooth

**Please connect a Bluetooth audio device.**

- The Bluetooth audio device was not connected correctly.
  - Check the settings for the unit and the Bluetooth audio device and reconnect.

**Unable to download phonebook.**

- Phonebook failed to read due to mobile phone disconnection, etc.
  - Check the mobile phone connection, and then conduct synchronizing and adding again. (See page 81)
- The connected mobile phone does not support synchronizing of its phone book.
  - Connect the mobile phone that supports synchronizing the phone book, then synchronize again. (See page 81)

### HDMI

**HDMI communication error,**
**Please check your device and try again.**

- Communication error.
  - Turn the ignition key off, and then set to ON again.
  - Check the display by reconnecting between the HDMI and the unit, using the HDMI cable.
  - Check the display by reconnecting between the HDMI device and the unit.

**HDMI current error,**
**Please reconnect your device and try again.**

- Abnormal current is run to the HDMI connector device.
  - Turn the ignition key off, and then set to ON again.
  - Disconnect the HDMI device from the unit, and then reconnect it.

**Too many monitors are connected to the HDMI output.**
**Please check the connection.**

- More than 4 HDMI monitors are connected.
- A cascade connection using more than 2 distributors is made.
  - Use one distributor and less than 4 HDMI monitors when connecting.

### iDataLink

**CAN Communication error**

- Communication error.
  - Check the iDataLink module connection.

### SiriusXM

**Check Tuner**

- The SiriusXM Tuner is disconnected or the unit is having trouble communicating with the Tuner.
  - Connect the Tuner or check the Tuner connection to the back of the unit.

**Check Antenna**

- The SiriusXM Satellite Radio antenna or cable is either damaged or not connected correctly to the SiriusXM Tuner.
  - Check that the SiriusXM antenna cable is connected to the SiriusXM Tuner and check that the antenna cable is not kinked or otherwise damaged. Replace the antenna if necessary.
  - SiriusXM products are available at your local car audio retailer or online at www.shop.siriusxm.com.

---

**No Signal**

- The SiriusXM satellite signal is too weak at the current location.
  - Move the vehicle to a location with a clear view of the southern sky.
  - Make sure the Satellite Radio antenna is properly mounted and not obstructed by metal objects.

---

**Channel <xxx> Not Subscribed**
**Call SiriusXM to Subscribe**

- The active channel has become unsubscribed or the requested channel is not available in your subscription package.
  - In the U.S.A., visit www.siriusxm.com or call 1-866-635-2349 if you have questions about your subscription package or would like to subscribe to this channel. In Canada, visit www.siriusxm.ca or call 1-877-438-9677.
  - The unit will revert to the previously selected channel or to channel 1 automatically.

---

**Channel <xxx> Not Available**

- The active channel is no longer in the SiriusXM channel lineup or the user has entered an invalid channel number.
  - Visit www.siriusxm.com for information on the current channel lineup.
- The unit will revert to the previous channel or to channel 1 automatically.

---

**Subscription Updated**
**Press OK to Continue**

- Your subscription has been updated.
  - Touch [OK] to clear this message.

---

**Channel <xxx> Locked**

- A locked channel is selected.
  - Input the passcode on the number keypad screen, see "Parental Lock Function" (page 68). If wrong passcode is entered, "Incorrect Pass Code entered" will be displayed and the unit will revert to the previous channel.

---

**Updating • • •**

- The Featured Favorites channels are currently updating.

---

**Updating Teams, please wait**

- The Game table is currently updating.

---

**Replay Memory Full**

- Replay Buffer is full.

---

**Replay Memory Near Full**

- Replay Buffer will be full within 11 seconds.

---

## Applying Alpine TuneIt App

**You can not use Sound App**
**Because External AP is on.**

- "Setting the External Audio Processor" (page 48) is "On."
  - When "External Audio Processor" (page 48) is set to "On," you cannot perform Sound Tuning from the Alpine TuneIt App. Set "External Audio Processor" to "Off" to perform Sound Tuning from the Alpine TuneIt App.

---

## Navigation

**The vehicle's position is erroneous.**

- The GPS reception is poor.
  - Drive the vehicle in an area of good GPS reception to allow the unit to recalibrate itself. Move to a location where strong GPS reception is possible.

---

**No operation**

- Moisture condensation
  - Allow enough time for the condensation to evaporate (about 1 hour).
- Ambient Temperature
  - Make sure the temperature inside the vehicle is between 0°C and 45°C (32°F and 113°F).

---

# Specifications

## MONITOR SECTION

| | |
|---|---|
| Screen Size | 9" (X409)<br>8" (X308U)<br>7" (INE-W987HD) |
| LCD Type | Transparent type TN LCD |
| Operation System | TFT active matrix |
| Number of Picture Elements | 1,152,000 pcs. (800 × 480 × 3 (RGB)) |
| Effective Number of Picture Elements | 99% or more |
| Illumination System | LED |

## FM TUNER SECTION

| | |
|---|---|
| Tuning Range | 87.7 – 107.9 MHz |
| Mono Usable Sensitivity | 9.3 dBf (0.8 µV/75 ohms) |
| 50 dB Quieting Sensitivity | 13.5 dBf (1.3 µV/75 ohms) |
| Alternate Channel Selectivity | 80 dB |
| Signal-to-Noise Ratio | 65 dB |
| Stereo Separation | 35 dB |
| Capture Ratio | 2.0 dB |

## AM TUNER SECTION

| | |
|---|---|
| Tuning Range | 530 – 1,710 kHz |
| Usable Sensitivity | 25.1 µV/28 dBf |

## USB SECTION

| | |
|---|---|
| USB requirements | USB 2.0 |
| Max. Power Consumption | 1,500 mA (CDP Support) |
| USB Class | USB (Mass Storage Class) |
| File System | FAT16/32 |
| Number of Channels | 2-Channels (Stereo) |
| Frequency Response*1 | 5 – 20,000 Hz (±1 dB) |
| Total Harmonic Distortion | 0.008% (at 1 kHz) |
| Dynamic Range | 95 dB (at 1 kHz) |
| Signal-to-Noise Ratio | 100 dB |
| Channel Separation | 85 dB (at 1 kHz) |

*1 *Frequency response may differ depending on the encoder software/bit rate.*

## HDMI SECTION

| | |
|---|---|
| Input Format | 480p/VGA |
| Output Format | 480p |

## GPS SECTION

| | |
|---|---|
| GPS Reception frequency | 1,575.42 ±1 MHz |
| GPS Reception sensitivity | -136 dB max. |

## Bluetooth SECTION

| | |
|---|---|
| Bluetooth Specification | Bluetooth V3.0 |
| Output Power | +4 dBm Ave. (Power class 2) |
| Profile | HFP (Hands-Free Profile)<br>OPP (Object Push Profile)<br>PBAP (Phone Book Access Profile)<br>A2DP (Advanced Audio Distribution Profile)<br>AVRCP (Audio/Video Remote Control Profile)<br>SPP (Serial Port Profile) |

## GENERAL

| | |
|---|---|
| Power Requirement | 12V DC<br>(11–16 V allowable) |
| Operating temperature | -4°F to +140°F<br>(-20°C to + 60°C) |
| Power Output | 16 W RMS × 4*2 |

*2 *Primary amplifier ratings per CEA-2006 Standard*
- *Power output: measured at 4 Ohms and ≤ 1% THD+N*
- *S/N: 80 dBA (reference: 1 W into 4 Ohms)*

| | |
|---|---|
| Weight | 1.51 kg (3 lbs. 5 oz) (X308U)<br>1.41 kg (3 lbs. 2 oz)<br>(INE-W987HD) |

Audio output level

| | |
|---|---|
| Preout (Front, Rear): | 4V/10k ohms (max.) |
| Preout (Subwoofer): | 4V/10k ohms (max.) |

- *Due to continuous product improvement, specifications and design are subject to change without notice.*
- *The LCD panel is manufactured using an extremely high precision manufacturing technology. Its effective pixel ratio is over 99.99%. This means that there is a possibility that 0.01% of the pixels could be either always ON or OFF.*

## NOSE/CHASSIS SIZE

X409 is sized exclusively for a certain car model.

### ■ X308U

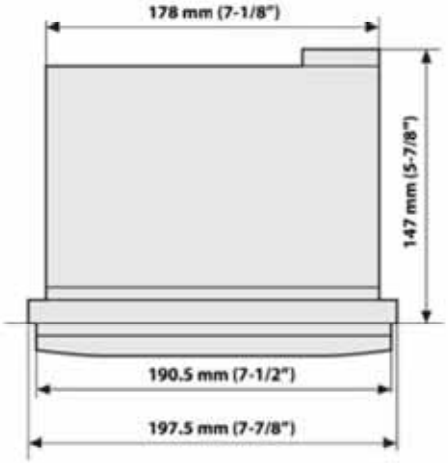


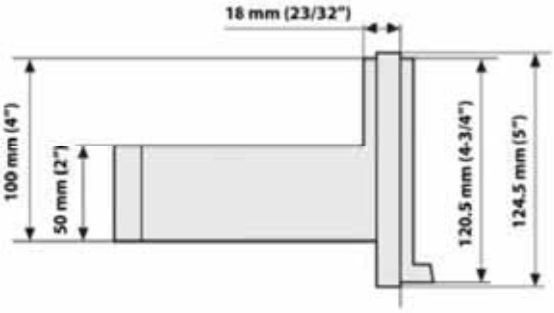


### ■ INE-W987HD

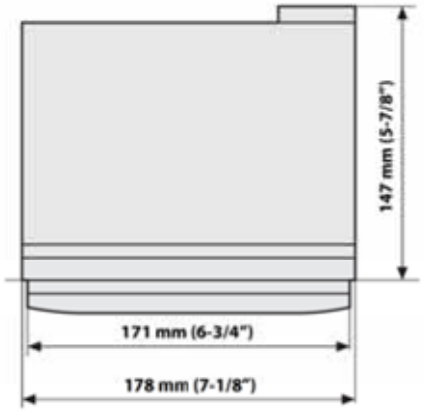


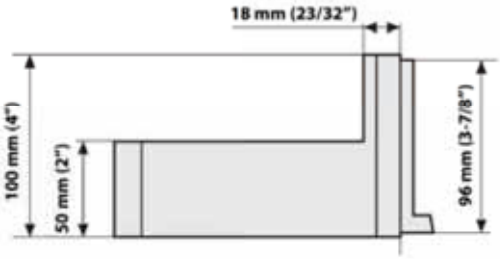


# END USER LICENSE AGREEMENT (HERE)

In using this Navigation System (hereinafter referred to as "System"), which includes Alpine Electronics, Inc. ("Alpine") Specifications, Space Machine, Inc. ("Space Machine") Software and HERE North America, LLC. ("HERE") Database, you are bound by the terms and conditions set forth below. By breaking the seal on the System and using your copy of the System, you have demonstrated your agreement to the terms and conditions of this Agreement. You should, therefore, make sure that you read and understand the following provisions.

The System may not be copied, duplicated or otherwise modified, in whole or in part, without the express written permission of Alpine, Space Machine and HERE.
The System may not be transferred or sublicensed to any third party for profit, rent or loan or licensed for reuse in any manner.
The System may not be decompiled, reverse engineered or otherwise disassembled, in whole or in part.
The System may not be used in a network or by any other manner of simultaneous use in multiple systems.
The System is intended solely for personal use (or internal use where the end-user is a business) by the consumer.
The System is not to be used for commercial purposes.
Neither Alpine, Space Machine nor HERE guarantees to the customer that the System meet the specific objectives of the user.
Neither Alpine, Space Machine nor HERE shall be responsible for any damages caused by the use of the System to the actual user and to any third party.
The warranty on the System shall not extend to an exchange or refund due to misspelling, omission of letters, or any other cosmetic discrepancy in layout found in the System.
The right to use the System shall expire either when the user destroys this software, or when any of the terms for use is violated and Alpine, Space Machine and/or HERE exercise the option to revoke the license to use this software.
The terms and conditions hereof apply to all subsequent users and owner's as well as to the original purchaser.

The HERE Database may include or reflect data of licensors, including Her Majesty The Queen in right of CANADA. Such data is licensed on an "AS IS" basis. The licensors, including Her Majesty The Queen, make no guarantees, representations or warranties respecting such data, either express or implied, arising by law or otherwise, accuracy or fitness for a particular purpose.
The licensors, including Her Majesty The Queen, shall not be liable in respect of any claim, demand or action, irrespective of the nature of the cause of the claim, demand or action alleging any loss, injury or damages, direct or indirect, which may result from the use or possession of the data or the HERE database. The licensors, including Her Majesty The Queen, shall not be liable in any way for loss of revenues or contracts, or any other consequential loss of any kind resulting from any defect in the data or the HERE database.
End User shall indemnify and save harmless the licensors, including Her Majesty The Queen and the minister, and their officers, employees and agents from and against any claim, demand or action, irrespective of the nature of the cause of the claim, demand or action, alleging loss, costs, expenses, damages or injuries (including injuries resulting in death) arising out of the use or possession of the data or the HERE database.

ALPINE

# LIMITED WARRANTY

ALPINE ELECTRONICS OF AMERICA, INC. ("Alpine"), is dedicated to quality craftsmanship and is pleased to offer this Warranty. We suggest that you read it thoroughly. Should you have any questions, please contact your Dealer or contact Alpine at one of the telephone numbers listed below.

## ● PRODUCTS COVERED:

This Warranty covers Car Audio Products and Related Accessories ("the product"). Products purchased in the Canada are covered only in the Canada. Products purchased in the U.S.A. are covered only in the U.S.A.

## ● LENGTH OF WARRANTY:

This Warranty is in effect for one year from the date of the first consumer purchase.

## ● WHO IS COVERED:

This Warranty only covers the original purchaser of the product, who must reside in the United States, Puerto Rico or Canada.

## ● WHAT IS COVERED:

This Warranty covers defects in materials or workmanship (parts and labor) in the product.

## ● WHAT IS NOT COVERED:

This Warranty does not cover the following:

① Damage occurring during shipment of the product to Alpine for repair (claims must be presented to the carrier).

② Damage caused by accident or abuse, including burned voice coils caused by over-driving the speaker (amplifier level is turned up and driven into distortion or clipping). Speaker mechanical failure (e.g. punctures, tears or rips). Cracked or damaged LCD panels. Dropped or damaged hard drives.

③ Damage caused by negligence, misuse, improper operation or failure to follow instructions contained in the Owner's manual.

④ Damage caused by act of God, including without limitation, earthquake, fire, flood, storms or other acts of nature.
Any cost or expense related to the removal or reinstallation of the product.

⑤ Service performed by an unauthorized person, company or association.

⑥ Any product which has the serial number defaced, altered or removed.

⑦ Any product which has been adjusted, altered or modified without Alpine's consent.

⑧ Any product not distributed by Alpine within the United States, Puerto Rico or Canada.

⑨ Any product not purchased from an Authorized Alpine Dealer.

## ● HOW TO OBTAIN WARRANTY SERVICE:

① You are responsible for delivery of the product to an Authorized Alpine Service Center or Alpine for repair and for payment of any initial shipping charges. Alpine will, at its option, repair or replace the product with a new or reconditioned product without charge. If the repairs are covered by the warranty, and if the product was shipped to an Authorized Alpine Service Center or Alpine, Alpine will pay the return shipping charges.

② You should provide a detailed description of the problem(s) for which service is required.

③ You must supply proof of your purchase of the product.

④ You must package the product securely to avoid damage during shipment. To prevent lost packages it is recommended to use a carrier that provides a tracking service.

## ● HOW WE LIMIT IMPLIED WARRANTIES:

ANY IMPLIED WARRANTIES INCLUDING FITNESS FOR USE AND MERCHANTABILITY ARE LIMITED IN DURATION TO THE PERIOD OF THE EXPRESS WARRANTY SET FORTH ABOVE AND NO PERSON IS AUTHORIZED TO ASSUME FOR ALPINE ANY OTHER LIABILITY IN CONNECTION WITH THE SALE OF THE PRODUCT.

## ● HOW WE EXCLUDE CERTAIN DAMAGES:

ALPINE EXPRESSLY DISCLAIMS LIABILITY FOR INCIDENTAL AND CONSEQUENTIAL DAMAGES CAUSED BY THE PRODUCT. THE TERM "INCIDENTAL DAMAGES" REFERS TO EXPENSES OF TRANSPORTING THE PRODUCT TO THE ALPINE SERVICE CENTER, LOSS OF THE ORIGINAL PURCHASER'S TIME, LOSS OF THE USE OF THE PRODUCT, BUS FARES, CAR RENTALS OR OTHERS COSTS RELATING TO THE CARE AND CUSTODY OF THE PRODUCT. THE TERM "CONSEQUENTIAL DAMAGES" REFERS TO THE COST OF REPAIRING OR REPLACING OTHER PROPERTY WHICH IS DAMAGED WHEN THIS PRODUCT DOES NOT WORK PROPERLY. THE REMEDIES PROVIDED UNDER THIS WARRANTY ARE EXCLUSIVE AND IN LIEU OF ALL OTHERS.

## ● HOW STATE/PROVINCIAL LAW RELATES TO THE WARRANTY:

This Warranty gives you specific legal rights, and you may also have other rights which vary from state to state and province to province. In addition, some states/provinces do not allow limitations on how long an implied warranty lasts, and some do not allow the exclusion or limitation of incidental or consequential damages. Accordingly, limitations as to these matters contained herein may not apply to you.

## ● IN CANADA ONLY:

This Warranty is not valid unless your Alpine car audio product has been installed in your vehicle by an Authorized Installation Center, and this warranty stamped upon installation by the installation center.

## ● HOW TO CONTACT CUSTOMER SERVICE:

Should the product require service, please call the following number for your nearest Authorized Alpine Service Center.

| | |
|---|---|
| **CAR AUDIO** | **1-800-ALPINE-1 (1-800-257-4631)** |
| **NAVIGATION** | **1-888-NAV-HELP (1-888-628-4357)** |

Or visit our website at; http://www.alpine-usa.com

**ALPINE ELECTRONICS OF AMERICA, INC.,** 19145 Gramercy Place, Torrance, California 90501, U.S.A.
Do not send products to this address.
Call the toll free telephone number or visit the website to locate a service center.

**About the Rules of Bluetooth Electromagnetic Radiation Regulation**

| | |
|---|---|
| **USA** | **FCC CAUTION**<br>Changes or modifications not expressly approved by the party responsible for compliance could void the user's authority to operate the equipment. |
| **USA/Canada** | **FCC/ISED(IC) CAUTION**<br>This equipment complies with FCC/IC radiation exposure limits set forth for an uncontrolled environment and meets the FCC radio frequency (RF) Exposure Guidelines and RSS-102 of the IC radio frequency (RF) Exposure rules. This equipment has very low levels of RF energy that it deemed to comply without maximum permissive exposure evaluation (MPE). But it is desirable that it should be installed and operated keeping the radiator at least 20cm or more away from person's body.<br>This device complies with Industry Canada's licence-exempt RSSs. Operation is subject to the following two conditions:<br>(1) This device may not cause interference; and<br>(2) This device must accept any interference, including interference that may cause undesired operation of the device. |
| | Cet équipement est conforme aux limites d'exposition aux rayonnements énoncées pour un environnement non contrôlé et respecte les règles les radioélectriques (RF) de la FCC lignes directrices d'exposition et d'exposition aux fréquences radioélectriques (RF) CNR-102 del'IC. Cet équipement émet une énergie RF très faible qui est considérée conforme sans évaluation de l'exposition maximale autorisée (MPE). Cependant, il est souhaitable qu'il devrait être installé et utilisé en gardant une distance de 20 cm ou plus entre le radiateur et le corps humain.<br>Le présent appareil est conforme aux CNR d'Industrie Canada applicables aux appareils radio exempts de licence.<br>L'exploitation est autorisée aux deux conditions suivantes :<br>1) l'appareil ne doit pas produire de brouillage;<br>2) l'utilisateur de l'appareil doit accepter tout brouillage radioélectrique subi, même si le brouillage est susceptible d'en compromettre le fonctionnement. |
| **México** | La operación de este equipo está sujeta a las siguientes dos condiciones: (1) Este dispositivo no puede causar interferencia perjudicial, (2) este dispositivo debe aceptar cualquier interferencia recibida, incluyendo interferencia que puede ser causada por la operación no deseada del equipo (que puede causar un funcionamiento no deseado). |

Don't forget to take a moment to protect your purchase by registering your product now at the following address: www.alpine-usa.com/registration.

N'oubliez pas de consacrer un moment à la protection de votre achat en enregistrant votre produit dès maintenant à l'adresse suivante : www.alpine-usa.com/registration.

Recuerde que con solo unos pocos pasos podrá proteger su producto, registrándolo a través de la siguiente dirección: www.alpine-usa.com/registration.