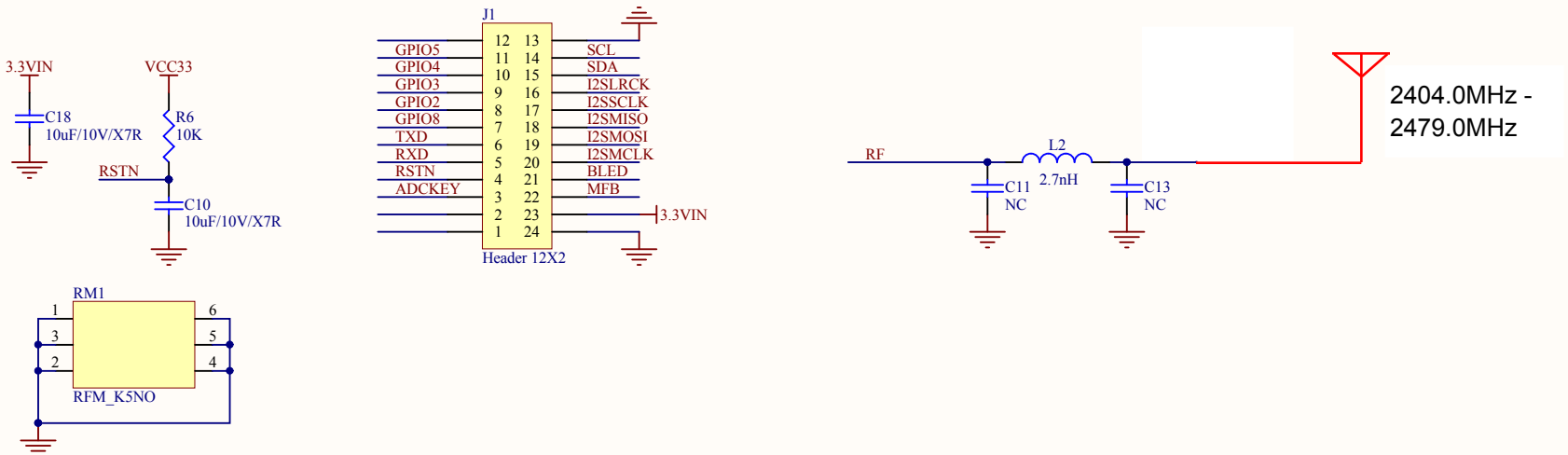

2.4GHz Wireless Module

Gigawit Wireless Sound & Sight	Title: *GWK5NO_TX*		
	Designed By: Jeff	Checked By: *	
	Approved By: *	Size: A4	Revision: *
Gigawit Electronics Ltd., All Rights Reserved.	Date: 2013/7/4 17:21:27	Sheet: * of *	

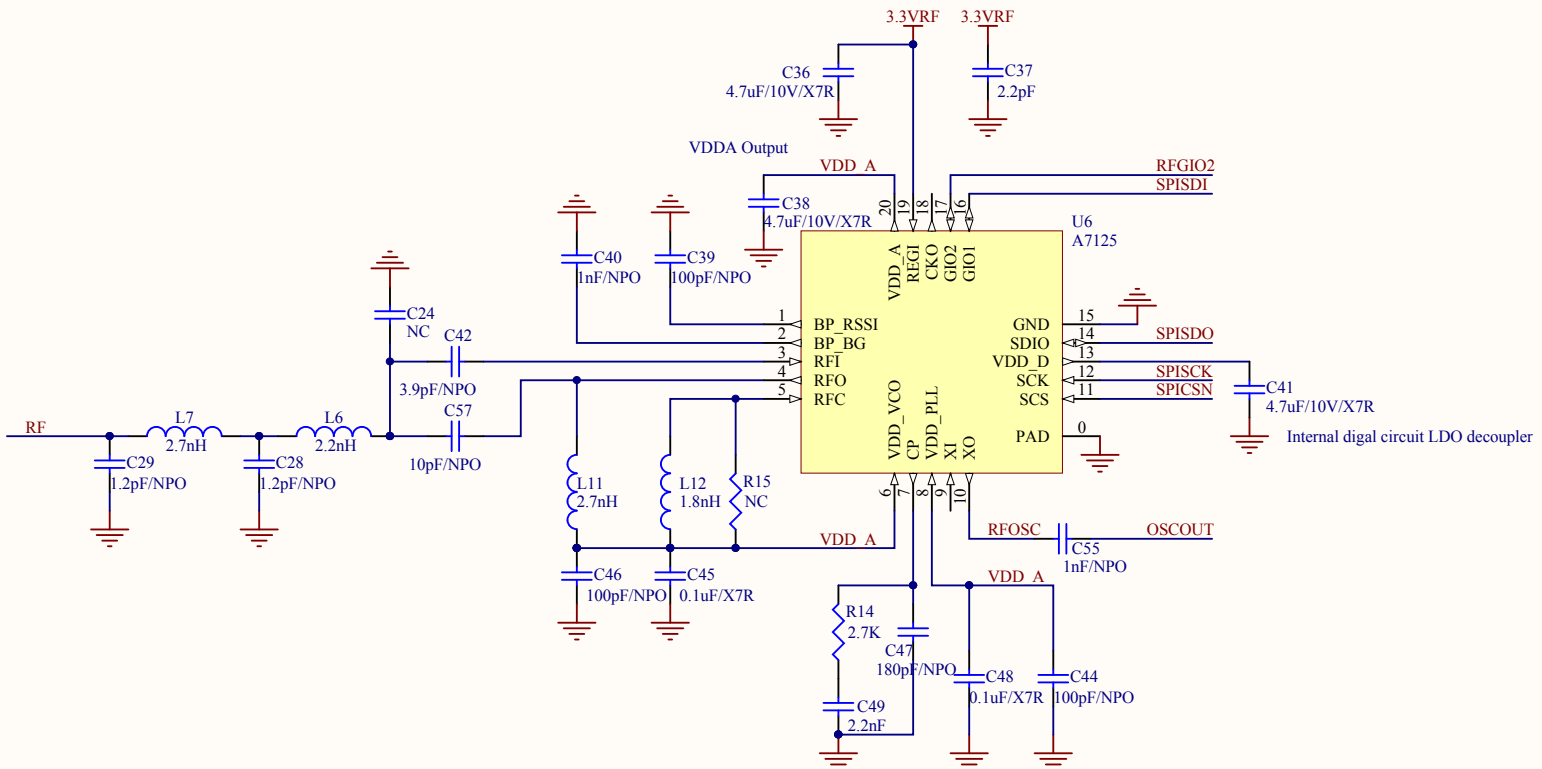

2.4GHz Wireless Module

Gigawit™
Wireless Sound & Sight™

Gigawit Electronics Ltd., All Rights Reserved.

Title: *RF_A7125*		
Designed By: Jeff	Checked By: *	
Approved By: *	Size: A4	Revision: *
Date: 2013/7/4 17:21:27	Sheet: * of *	

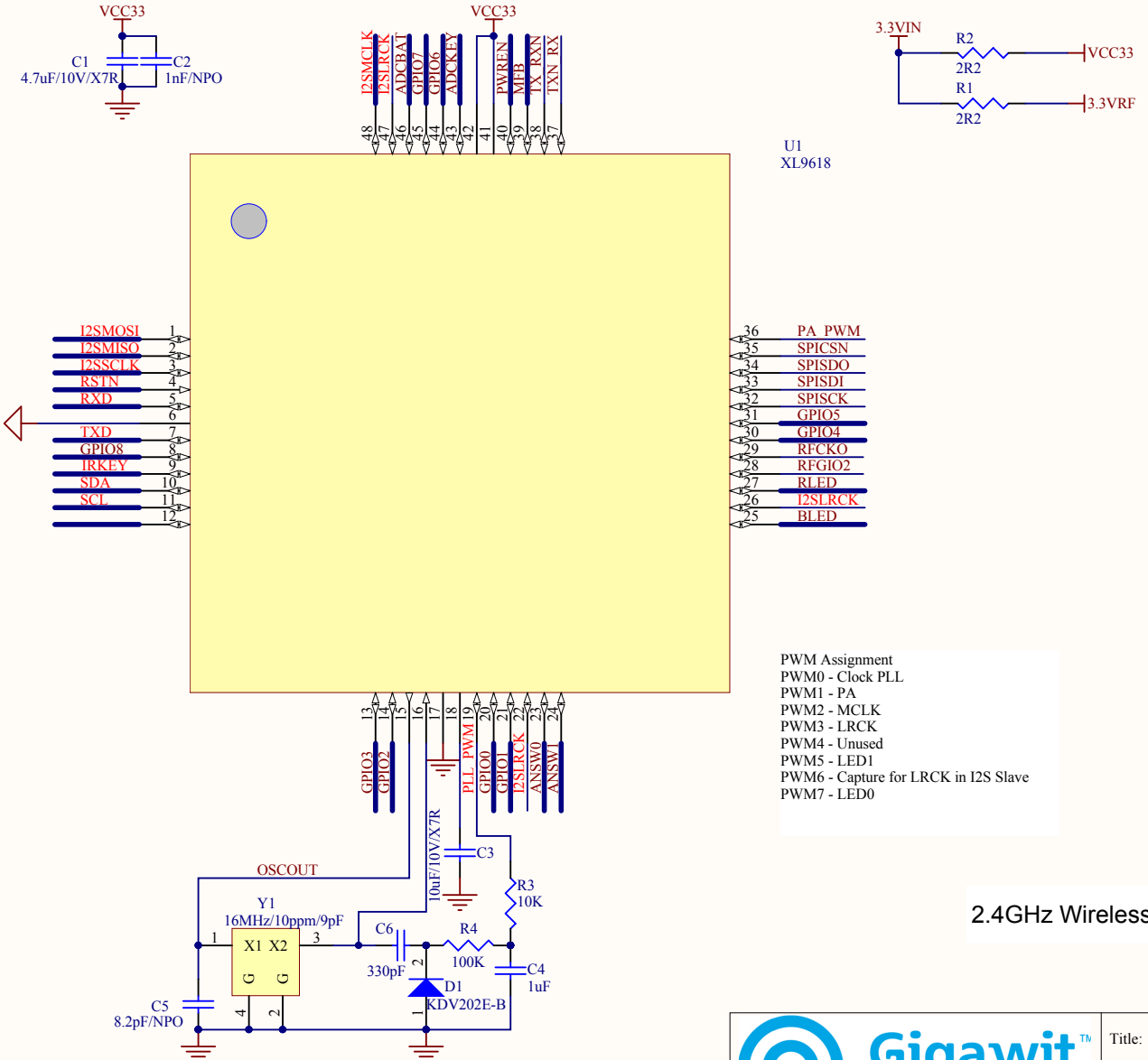

PWM Assignment
PWM0 - Clock PLL
PWM1 - PA
PWM2 - MCLK
PWM3 - LRCK
PWM4 - Unused
PWM5 - LED1
PWM6 - Capture for LRCK in I2S Slave
PWM7 - LED0

2.4GHz Wireless Module

Gigawit™ Wireless Sound & Sight™

Gigawit Electronics Ltd., All Rights Reserved.

Title: *XL9618*		
Designed By: Jeff	Checked By: *	
Approved By: *	Size: A4	Revision: *
Date: 2013/7/4 17:21:27	Sheet: * of *	