SAMSUNG

QUICK START GUIDE

LED View Cover

SAMSUNG

Printed in Korea
GH68-XXXXXX Rev.1.0
E Type 01/2017

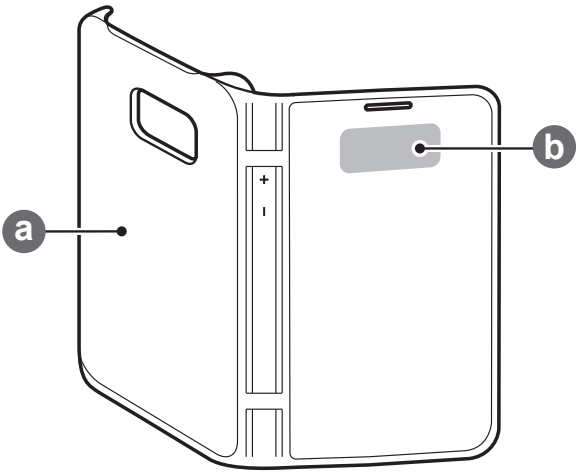

1

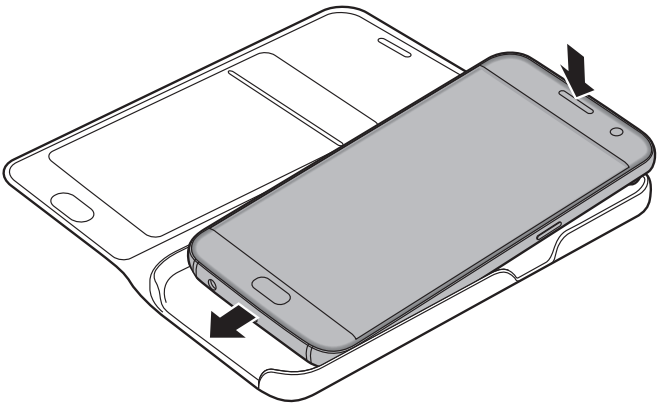

Copyright © 2016 Samsung Electronics

- Please read this guide before using the device to ensure safe and proper use.
- Images may differ in appearance from the actual product. Content is subject to change without prior notice. You can access the full user manual for more information. Visit *www.samsung.com* to view device information, the latest user manual, and more.
- Your consumer rights are governed by the law of the country in which you purchased the product. Please contact your service provider for more information.

- Before using the LED View Cover, make sure the mobile device you want to connect to is compatible with this LED View Cover.
- Verify that the NFC function is working properly before using the device with the LED View Cover or Auto Screen On/Off feature active.
- NFC may be undetectable if your device is running an MDM software or near a metallic object.

Device layout

a	NFC antenna	b	LED window

Attaching the LED View Cover

Open the LED View Cover and attach it to your mobile device. ► 1

Answering or rejecting calls

You can answer or reject a call on your mobile device using the LED window without opening the LED View Cover.

To answer a call, drag your finger to the right on the LED window.

To reject a call, drag your finger to the left on the LED window.

To stop an alarm or timer, drag your finger to the right on the LED window.

The LED window may not work while wireless charging.

Unlocking the mobile device's screen automatically

You can set your mobile device to unlock automatically when the LED View Cover is flipped open. On your mobile device, complete the below steps to activate this feature.

1. On the Home screen, tap **Apps** → **Settings** → **Accessories**.
2. Tap **Automatic unlock**, and then tap the switch to activate it.

This feature is available only when secure lock is disabled.

Assigning LED images to contacts

You can assign different LED images to contacts which appear on the LED window during incoming calls. On your mobile device, complete the steps below.

1. On the Home screen, tap **Apps** → **Settings** → **Accessories** → **LED caller ID**.
2. Select an image.
3. Select a contact from the contacts list and tap **DONE**.

Safety information

Read all safety information before using the device to ensure safe and proper use. To view the full safety information, refer to the Samsung website.

Use manufacturer-approved batteries, chargers, accessories, and supplies

Do not touch the device with wet hands

Do not drop or cause an impact to the charger or the device

The device can be used in locations with an ambient temperature of 0°C to 35°C. You can store the device at an ambient temperature of -20°C to 50°C. Using or storing the device outside of the recommended temperature ranges may damage the device or reduce the battery's lifespan

Prevent the multipurpose jack and the small end of the charger from contact with conductive materials, such as liquids, dust, metal powders, and pencil leads

Do not allow children or animals to chew or suck the device

Do not disassemble, modify, or repair your device

Correct disposal

This marking on the product, accessories or literature indicates that the product and its electronic accessories (e.g. charger, headset, USB cable) should not be disposed of with other household waste.

This product is RoHS compliant.

For information on Samsung's environmental commitments and product-specific regulatory obligations, e.g. REACH, WEEE, Batteries, visit *samsung.com/uk/aboutsamsung/samsungelectronics/corporatecitizenship/data_corner.html*

FCC Statement

This device complies with part 15 of the FCC Rules. Operation is subject to the following two conditions: (1) This device may not cause harmful interference, and (2) this device must accept any interference received, including interference that may cause undesired operation.

Caution: Any changes or modifications not expressly approved by Samsung Electronics Co., Ltd. could void the user's authority to operate the equipment.

Industry Canada Statement

This device complies with Industry Canada licence-exempt RSS standard(s). Operation is subject to the following two conditions: (1) this device may not cause interference, and (2) this device must accept any interference, including interference that may cause undesired operation of the device.

Le présent appareil est conforme aux CNR d'Industrie Canada applicables aux appareils radio exempts de licence. 'exploitation est autorisée aux deux conditions suivantes : (1) l'appareil ne doit pas produire de brouillage, et (2) l'utilisateur de l'appareil doit accepter tout brouillage radioélectrique subi, même si le brouillage est susceptible d'en compromettre le fonctionnement.