Digital Video Camcorder

Mini DV Digital Video Cassette

SC-D6550

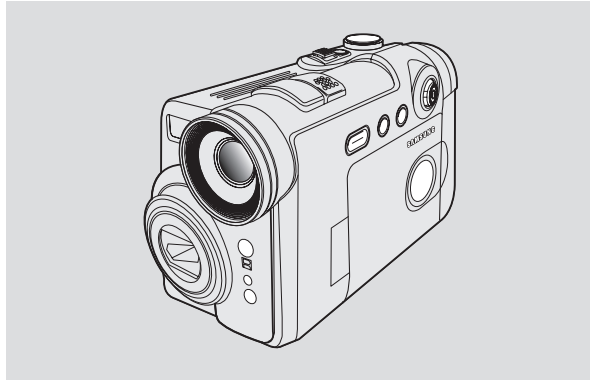

AF Auto Focus
CCD Charge Coupled Device
LCD Liquid Crystal Display

Owner's Instruction Book

Before operating the unit, please read this Instruction Book thoroughly, and retain it for future reference.

SAMSUNG ELECTRONICS

US PATENT 4415844

Notices and Safety Instructions

Safety Instructions

CAUTION

RISK OF ELECTRIC SHOCK
DO NOT OPEN

CAUTION:
TO REDUCE THE RISK OF ELECTRIC SHOCK, DO NOT REMOVE COVER(OR BACK). NO USER SERVICEABLE PARTS INSIDE, REFER SERVICING TO QUALIFIED SERVICE PERSONNEL.

To prevent electric shock, match wide blade of plug to wide slot and fully insert.

This symbol is intended to alert the user to the presence of uninsulated dangerous voltage within the product's enclosure that may be of sufficient magnitude to constitute a risk of fire or electric shock.

This symbol is intended to alert the user to the presence of important operating and maintenance instructions in the literature accompanying this product.

1. READ INSTRUCTIONS:
All the safety and operating instructions should be read before the CAMCORDER is operated.

2. RETAIN INSTRUCTIONS:
The safety and operating instructions should be retained for future reference.

3. HEED WARNINGS:
All warnings on the CAMCORDER and in the operating instructions should be adhered to.

4. FOLLOW INSTRUCTIONS:
All operating and maintenance instructions should be followed.

5. CLEANING:
Unplug this CAMCORDER from the wall outlet before cleaning.
Do not use liquid or aerosol cleaners.
Use a dry cloth used for dusting cabinets.

6. ATTACHMENTS:
Do not use attachments not recommended by the CAMCORDER product manufacturer as they may be hazardous.

7. WATER AND MOISTURE:
Do not use this CAMCORDER near water;
for example, near a bathtub, wash bowl, kitchen sink, laundry tub, in a wet basement, near a swimming pool or lake.

8. ACCESSORIES:
Do not place this CAMCORDER on an unstable cart, stand, tripod, bracket or table. The CAMCORDER may fall, causing serious injury to a child or an adult, and serious damage to the unit.
Use only with a cart, stand, tripod, bracket, or table recommended by the manufacturer or sold with the CAMCORDER. Any mounting of the unit should follow the manufacturer's instructions and should use a mounting accessory recommended by the manufacturer.

A. An appliance and cart combination should be moved with care. Quick stops, excessive force and uneven surfaces may cause the appliance and cart combination to overturn.
PORTABLE CART WARNING
(Symbol provided by RETAC)

Notices and Safety Instructions

9. VENTILATION:
Slots and openings in the cabinet are provided for ventilation to ensure reliable operation of the CAMCORDER and to protect it from overheating. These openings must not be blocked or covered. Never place your CAMCORDER on a bed, sofa, rug, or other similar surface: on or near a radiator or heat register. This CAMCORDER should not be placed in a built-in installation such as a bookcase or rack unless proper ventilation is provided or the manufacturer's instructions have been adhered to.

10. POWER SOURCES:
The CAMCORDER should be operated only from the type of power source indicated on the label.
If you are not sure of the type of power supply at your home, consult your appliance dealer or local power company.
A CAMCORDER is intended to be operated from battery power, or other sources, refer to the operating instructions.

11. GROUNDING OR POLARIZATION:
This CAMCORDER may be equipped with either a polarized 2-wire AC line plug (a plug having one blade wider than the other) or a 3-wire grounding type plug, a plug having a third (grounding) pin.
If you are unable to insert the plug fully into the outlet, try reversing the plug. If the plug still fails to fit, contact your electrician to replace your outlet. Do not defeat the safety purpose of the polarized plug.

12. POWER-CORD PROTECTION:
Power-supply cords should be routed so that they are not likely to be walked on or pinched by items placed upon or against them, paying particular attention to cords or plugs, convenient receptacles, and the point where they exit from the unit.

13. OUTDOOR ANTENNA GROUNDING:
If an outside antenna or cable system is connected to the CAMCORDER, be sure the antenna or cable system is grounded to provide some protection against voltage surges and built-up static charges, Section 810 of the National Electrical Code, ANSI/NFPA No. 70-1984, provides information with respect to proper grounding of the mast and supporting structure, grounding of the lead-in wire and supporting structure, grounding of the mast and supporting structure, grounding of the lead-in wire to an antenna discharge unit, size of grounding to conductors, location of antenna-discharge unit, connection to grounding electrodes and requirements for the grounding electrode.
See figure below.

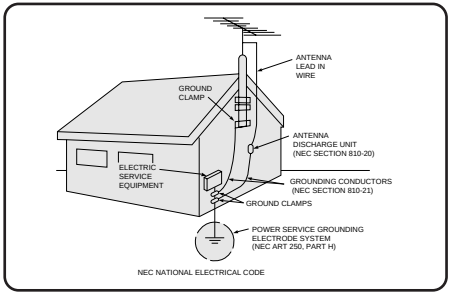

14. LIGHTNING:
For added protection of this CAMCORDER during a lightning storm or when it is left unattended and unused for long periods of time, unplug it from the wall outlet and disconnect the antenna or cable system.
This will prevent damage to the CAMCORDER due to lightning and power-line surges.

15. POWER LINES:
An outside antenna system should not be located in the vicinity of overhead power lines or other electric light or power circuits where it can fall into such power lines or circuits. When installing an outside antenna system, extreme care should be taken to keep from touching such power lines or circuits as contact with them might be fatal.

16. OVERLOADING:
Do not overload wall outlets and extension cords as this can result in a risk of fire or electric shock.

17. OBJECTS AND LIQUIDS:
Never push objects of any kind into this CAMCORDER through openings as they may touch dangerous voltage points or short out a part that could result in a fire or electric shock.
Never spill liquids of any kind onto the CAMCORDER. Should spillage occur, unplug unit and have it checked by a technician before use.

18. SERVICING:
Do not attempt to service this CAMCORDER yourself. Opening or removing covers may expose you to dangerous voltage or other hazards.
Refer all servicing to qualified service personnel.

19. DAMAGE REQUIRING SERVICE:
Unplug this CAMCORDER from the wall outlet and refer servicing to qualified service personnel under the following conditions:
a. When the power-supply cord or plug is damaged.
b. If any liquid has been spilled onto, or objects have fallen into the CAMCORDER.
c. If the CAMCORDER has been exposed to rain or water.
d. If the CAMCORDER does not operate normally by following the operating instructions, adjust only those controls that are covered by the operating instructions. Improper adjustment of other controls may result in damage and will often require extensive work by a qualified technician to restore the CAMCORDER to its normal operation.
e. If the CAMCORDER has been dropped or the cabinet has been damaged.
f. When the CAMCORDER exhibits a distinct change in performance, this indicates a need for service.

20. REPLACEMENT PARTS:
When replacement parts are required, be sure the service technician has used replacement parts specified by the manufacturer and having the same characteristics as the original part.
Unauthorized substitutions may result in fire, electric shock or other hazards.

21. SAFETY CHECK:
Upon completion of any service or repairs to this CAMCORDER, ask the service technician to perform safety checks to determine that the CAMCORDER is in safe operating order.

22. To prevent damage which may result in fire or shock hazard, do not expose this appliance to rain or moisture.

23. If this power supply is used at 240V ac, a suitable plug adapter should be used.

NOTE TO CATV SYSTEM INSTALLER:
This reminder is provided to call the CATV system installer's attention to Article 820-40 of the NEC that provides guidelines for proper grounding and, in particular, specifies that the cable ground shall be connected to the grounding system of the building as close to the point of cable entry as practical.

USER INSTALLER CAUTION:
Your authority to operate this FCC certified equipment could be voided if you make changes or modifications not expressly approved by this party responsible for compliance to part 15 FCC rules.

NOTE:

Hg LAMP(S) INSIDE THIS PRODUCT CONTAIN MERCURY AND MUST BE RECYCLED OR DISPOSED OF ACCORDING TO LOCAL, STATE OR FEDERAL LAWS. For details see lamprecycle.org, eiae.org, or call 1-800-Samsung

NOTE: This equipment has been tested and found to comply with the limits for a Class B digital device, pursuant to part 15 of the FCC Rules. These limits are designed to provide reasonable protection against harmful interference in a residential installation. This equipment generates, uses and can radiate radio frequency energy and, if not installed and used in accordance with the instructions, may cause harmful interference to radio communications. However, there is no guarantee that interference will not occur in a particular installation. If this equipment does cause harmful interference to radio or television reception, which can be determined by turning the equipment off and on, the user is encouraged to try to correct the interference by one or more of the following measures:

- Reorient or relocate the receiving antenna.
- Increase the separation between the equipment and receiver.
- Connect the equipment into an outlet on a circuit different from that to which the receiver is connected.
- Consult the dealer or an experienced radio/TV technician for help and for additional suggestions.
  The user may find the following booklet prepared by the Federal Communications Commission helpful : "How to Identify and Resolve Radio-TV Interference Problems."
  This Booklet is available from the U.S. Government Printing Office, Washington, D.C. 20402, Stock No. 004-000-00345-4.

FCC Warning
The user is cautioned that changes or modifications not expressly approved by the manufacturer could void the user's authority to operate the equipment.

FCC ID : A3L05GAMMA3
This device complies with Part 15 of FCC Rules.
Operation is subject to the following two conditions;
(1) This device may not cause harmful interference
(2) This device must accept any interference received, including interference that may cause undesired operation.

Notices regarding Copyright

Television programs, video tapes, DVD titles, films, and other program materials may be copyrighted.
Unauthorized copying of copyrighted material may be against the law.
All the trade names and registered trademarks mentioned in this manual or other documentation provided with your Samsung product are trademarks or registered trademarks of their respective holders.

Notes regarding Moisture Condensation

1. A sudden rise in atmospheric temperature may cause condensation to form inside the Camcorder.

   for example:
   - When you move the Camcorder from a cold location to a warm location (e.g. from outside to inside during the winter.)
   - When you move the Camcorder from a cool location to a hot location (e.g. from inside to outside during the summer.)

2. If the (DEW) protection feature is activated, leave the Camcorder for at least two hours in a dry, warm room with the cassette compartment opened and the Battery pack removed.

Notes regarding Camcorder

1. Do not leave the Camcorder exposed to high temperatures (above 60°C or 140°F).
   For example, in a parked car in the sun or exposed to direct sunlight.

2. Do not let the Camcorder get wet.
   Keep the Camcorder away from rain, sea water, and any other form of moisture.
   If the Camcorder gets wet, it may get damaged.
   Sometimes a malfunction due to exposure to liquids cannot be repaired.

Notes regarding the Battery Pack

- Be sure to use a recommended battery pack as described on page 24. The batteries are available at a SAMSUNG retailer.
- Make sure that the Battery pack is fully charged before starting to record.
- To preserve battery power, keep your Camcorder turned off when you are not operating it.
- If your Camcorder is in REC mode, and it is left in STBY mode without being operated for more than 5 minutes with a tape inserted, it will automatically turn itself off to protect against unnecessary battery discharge.
- Make sure that the Battery pack is fitted firmly into place.
  Do not drop the Battery pack. Dropping the Battery pack may damage it.
- A brand new Battery pack is not charged.
  Before using the Battery pack, you need to charge it completely.
- Fully discharging a Lithium-Ion battery damages the internal cells. The Battery pack may be prone to leakage when fully discharged.
- To avoid damage to the battery pack, make sure to remove the battery when no charge remains.
- It is a good idea to use the viewfinder rather than the LCD screen when recording for long periods, because the LCD screen consumes more battery power.

- When the battery reaches the end of its life, please contact your local dealer.
  The batteries have to be dealt with as chemical waste.
- Be careful not to drop the battery pack when you release it from the camcorder.

Notes regarding the Video Head Cleaning

- To ensure normal recording and a clear picture, clean the video heads regularly.
  If a square block-shape distorts playback, or only a blue screen is displayed, the video heads may be dirty.
  If this happens, clean the video heads with a dry type cleaning cassette.
- Do not use a wet-type cleaning cassette. It may damage the video heads.

Note regarding the Lens

Do not film with the camera lens pointing directly at the sun.
Direct sunlight can damage the CCD(Charge Coupled Device).

Notes regarding electronic Viewfinder

1. Do not position the Camcorder such that the Viewfinder is pointing towards the sun.
   Direct sunlight can damage the inside of the Viewfinder. Be careful when placing the Camcorder under sunlight or near a window exposed to sunlight.
2. Do not pick up the Camcorder by holding the Viewfinder.
3. Applying excessive force to the Viewfinder may damage it.

Notes regarding 'Record' or 'Playback' Using the LCD Screen

1. The LCD screen has been manufactured using high precision technology. However, there may be tiny dots (red, blue or green in color) that appear on the LCD screen. These dots are normal and do not affect the recorded picture in any way.
2. When you use the LCD screen under direct sunlight or outdoors, it maybe difficult to see the picture clearly.
   If this occurs, we recommend using the Viewfinder.
3. Direct sunlight can damage the LCD screen.

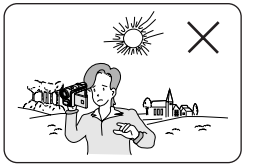

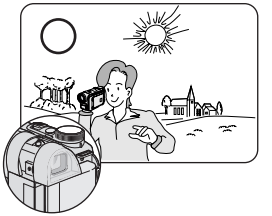

Notes regarding the Hand Strap

- To ensure a steady picture while filming, check that the hand strap is properly adjusted.
- Do not force your hand into the hand strap as you could damage it.

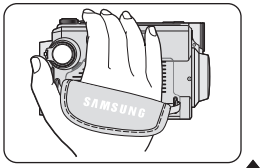

Precaution regarding the Lithium Battery

1. The Lithium battery maintains the clock function and user settings; even if the Battery pack or AC adapter is removed.
2. The Lithium battery for the Camcorder lasts about 6 months under normal operation from time of installation.
3. When the Lithium battery becomes weak or dead, the date/time indicator will display **12:00 AM JAN. 1, 2005** when you set the Date/Time to on.
   When this occurs, replace the Lithium battery with a new one(type CR2025).
4. There is a danger of explosion if battery is incorrectly replaced.
   Replace only with the same or equivalent type.

Warning: Keep the Lithium battery out of reach of children. Should a battery be swallowed, consult a doctor immediately.

Servicing

- Do not attempt to service this Camcorder yourself.
- Opening or removing covers may expose you to dangerous voltage or other hazards.
- Refer all servicing to qualified service personnel.

Replacement Parts

- When replacement parts are required, be sure the service technician has used replacement parts specified by the manufacturer and having the same characteristics as the original part.
- Unauthorized substitutions may result in fire, electric shock or other hazards.

[CAUTION]

- DO NOT FIRE THE FLASH WHILE SCREENING THE FLASH BY HANDS. DO NOT TOUCH THE FLAHSLIGHT AFTER CONTINUOUS FIRING OF THE FLASH. POSSIBLE BURING HAZARD.

[WARNING]

- DO NOT FIRE THE FLASH FROM A SHORT DISTANCE TO A PERSION TO A PERSON(ESPECIALLY TOWARDS AN INFANT.)CLOSE FIRING A FLASGH MIGHT CAUSE SERIOUS DAMAGE TO ONE'S EYES.

Front & Left View

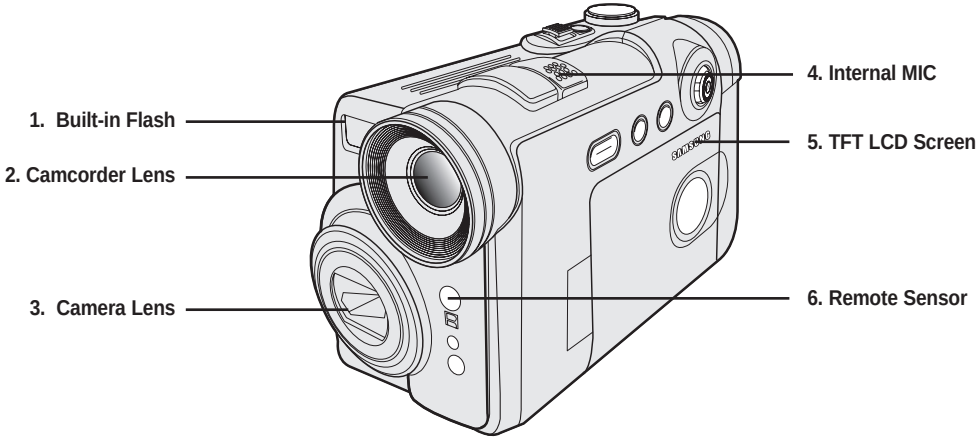

1. Built-in Flash (see page 108)
2. Camcorder Lens
3. Camera Lens
4. Internal MIC
5. TFT LCD Screen
6. Remote Sensor

Left Side View

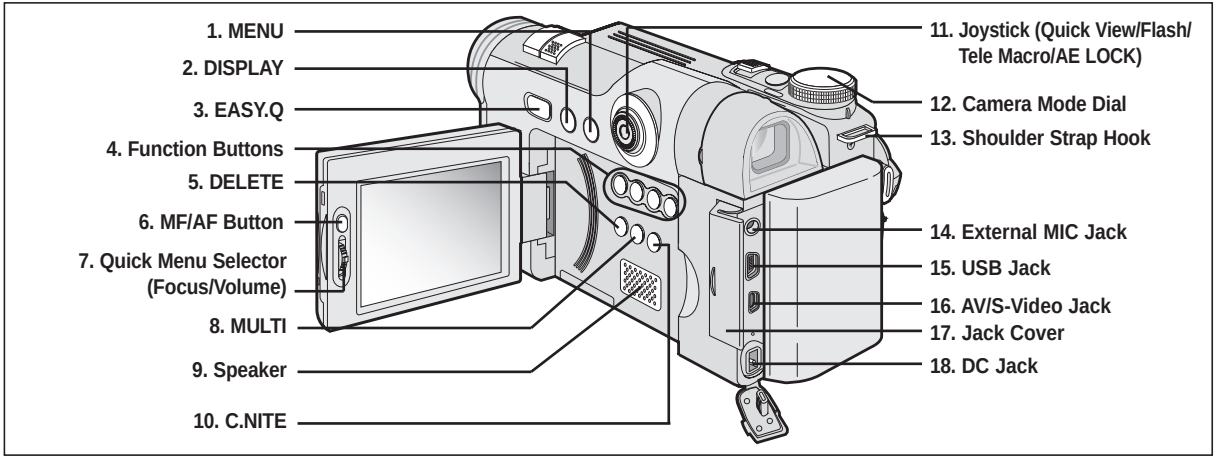

1. MENU
2. DISPLAY (see page 25)
3. EASY.Q (see page 42)
4. Function Buttons

Button	PLAY	REC	▶ (Play)
◀◀	REW	REC Search –	REV
▶▶	FF	REC Search +	FWD
▶/II	PLAY/STILL	FADE	-
■	STOP	BLC	-

5. DELETE (🗑) (see page 101)
6. MF/AF Button (see page 110)
7. Quick Menu Selector (Focus/Volume)
8. MULTI (▦) (see page 101)
9. Speaker
10. C.NITE (see page 49)
11. Joystick (Quick View/Flash/ Tele Macro/AE LOCK)
12. Camera Mode Dial
13. Shoulder Strap Hook (see page 20)
14. External MIC Jack
15. USB Jack
16. AV/S-Video Jack
17. Jack Cover
18. DC Jack

Right & Top View

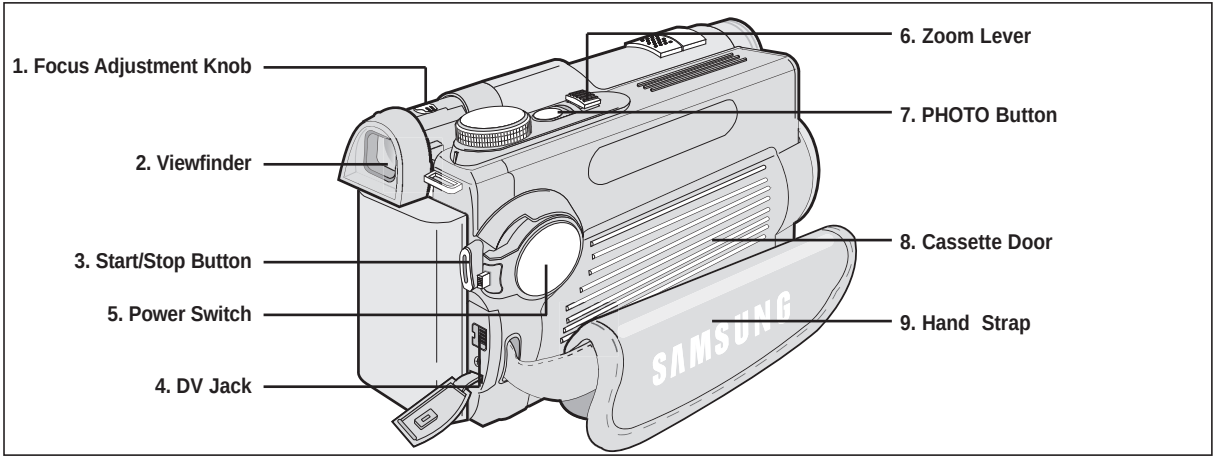

1. Focus Adjustment Knob (see page 37)
2. Viewfinder (see page 37)
3. Start/Stop Button
4. DV Jack
5. Power Switch (REC, PLAY, OFF or (CAMERA))
6. Zoom Lever (see page 46)
7. PHOTO Button (see page 67)
8. Cassette Door
9. Hand Strap

Rear & Bottom View

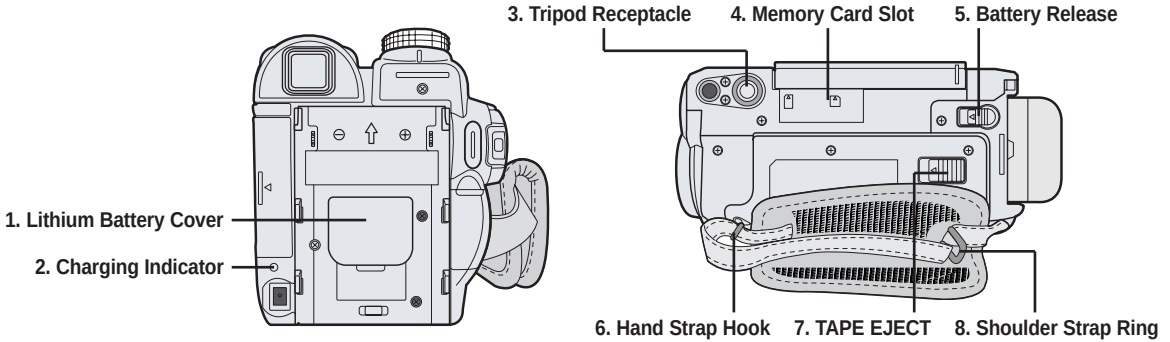

1. Lithium Battery Cover
2. Charging Indicator
3. Tripod Receptacle
4. Memory Card Slot
5. Battery Release
6. Hand Strap Hook
7. TAPE EJECT
8. Shoulder Strap Ring

Usable Memory Card

Memory Stick
Memory Stick PRO

SD

MMC

Remote Control

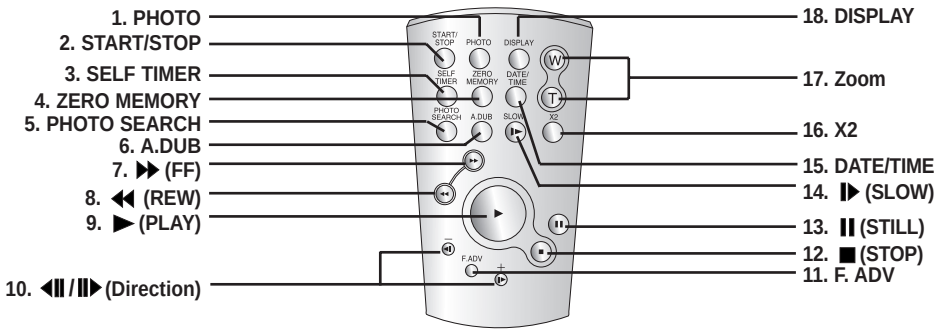

1. PHOTO (see pages 67, 97)
2. START/STOP
3. SELF TIMER (see pages 45, 103)
4. ZERO MEMORY (see page 44)
5. PHOTO SEARCH (see page 67)
6. A.DUB (see page 74)
7. ▶▶ (FF)
8. ◀◀ (REW)
9. ▶ (PLAY)
10. ◀II / II▶ (Direction) (see page 72)
11. F. ADV (see page 73)
12. ■ (STOP)
13. II (STILL)
14. II▶ (SLOW) (see page 72)
15. DATE/TIME
16. X2 (see page 73)
17. Zoom
18. DISPLAY

Lithium Battery Installation

Battery Installation for the Internal Clock

- The Lithium battery maintains the clock function and preset contents of the memory; even if the Battery pack or AC Power adapter is removed.
- The Lithium battery for the Camcorder lasts about 6 months under normal operation from the time of installation.
- When the Lithium battery becomes weak or dead, the date/time indicator will display **12:00 AM JAN. 1, 2005** when you set the Date/Time to on.
  When this occurs, replace the Lithium battery with type CR2025.

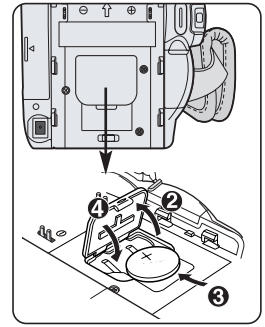

1. Remove the Lithium-ion battery from the rear of the Camcorder.
2. Open the Lithium battery cover on the rear of the Camcorder.
3. Position the Lithium battery in the Lithium battery holder, with the positive (⊕) terminal face up.
4. Close the Lithium battery cover.

Battery Installation for the Remote Control

- You need to insert or replace the Lithium battery when:
  - You purchase the Camcorder.
  - The remote control doesn't work.
- Position the Lithium battery in the Lithium battery holder, with the positive (⊕) terminal face up.
- Be careful not to reverse the polarity of the battery.

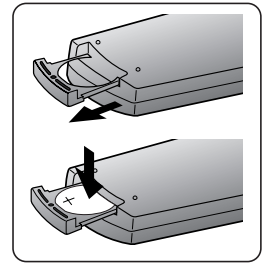

[Note]
The Lithium battery must be inserted in the correct direction.

Warning: Keep the Lithium battery out of the reach of the children.
Should any battery be swallowed, consult a doctor immediately.

Using the Lithium Ion Battery Pack

✤ The amount of continuous recording time available depends on
- The type and capacity of the Battery pack you are using.
- How often the zoom function is used.
  It is recommended that you have several batteries available.

Charging the Lithium Ion Battery Pack

1. Attach the Battery pack to the Camcorder.
2. Connect the AC Power adapter to an AC Cord and connect the AC Cord to a wall socket.
3. Connect the DC cable to the DC jack on the Camcorder.
4. Turn the **Power** switch to **OFF**, and the charging indicator will start to flash, showing that the battery is charging.

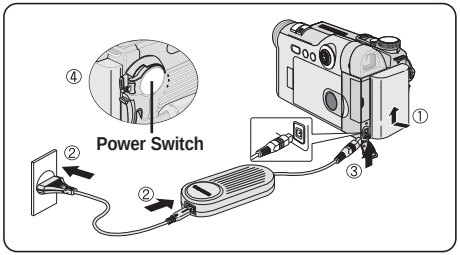

Blinking time	Charging rate
Once per second	Less than 50%
Twice per second	50% ~ 75%
Three times per second	75% ~ 90%
Blinking stops and stays on	90% ~ 100%
On for a second and off for a second	Error - Reset the Battery pack and the DC cable

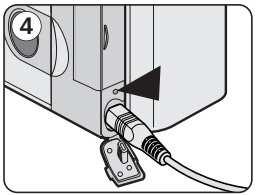

<Charging Indicator>

5. When the battery is fully charged, disconnect the Battery pack and the AC Power adapter from the Camcorder.
   Even with the **Power** switched **OFF**, the Battery pack will still discharge.

[Notes]
- The Battery pack may be charged a little at the time of purchase.
- To prevent reduction in the life and capacity of the Battery pack, always remove it from the Camcorder after it is fully charged.
- The amount of continuous recording time available depends on:
  - The type and capacity of the Battery pack you are using.
  - How often the zoom is used.
  - Type of use (Camcorder/Camera/With LCD screen etc.).
  - Ambient temperature.
    It is recommended to have additional battery packs available.
- Even when the Power switched to OFF, the Battery pack will still discharge if it is left attached to the device.

OSD (On Screen Display) in REC/PLAY Modes

1. Battery Level (see page 25)
2. Manual Focus (see page 56)
3. EASY.Q (see page 42)
4. DIS (see page 59)
5. Program AE (see page 61)
6. White Balance Mode (see page 57)
7. Shutter Speed (see page 55)
8. Exposure (see page 55)
9. Digital Effects Mode (see page 63)
10. Date/Time (see page 34)
11. Zoom Position (see page 46)
12. Color Nite (see page 49)
13. USB
14. Remote (see page 31)
15. Wind Cut (see page 54)
16. BLC (Back Light Compensation) (see page 48)
17. Audio Mode (see page 53)
18. Remaining Tape (measured in minutes)
19. Tape Counter
20. Zero Memory (see page 44)
21. Record Speed Mode
22. Operating Mode
23. Self Timer
24. Photo Image
25. Tele Macro (see page 46)
26. Audio Playback
27. DEW (see page 9)
28. Warning Indicator (see page 147)
29. Message Line (see page 147)
30. Volume Control (see page 69)
31. DV IN (DV data transfer mode) (see page 77)
32. Audio Dubbing (see page 74)

OSD in REC Mode

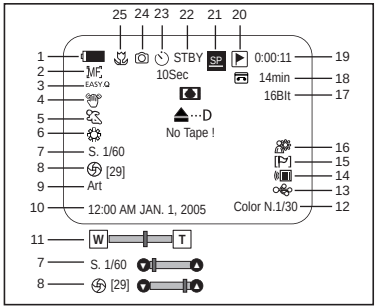

OSD in PLAY Mode

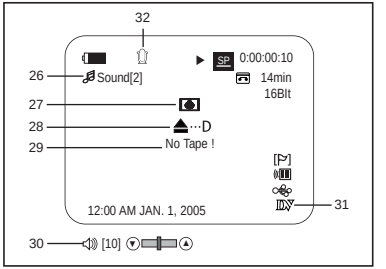

Setting the Wireless Remote Control Acceptance (Remote)

- The Remote function works in both REC and PLAY modes.
- The Remote option allows you to enable or disable the remote control for use with the Camcorder.

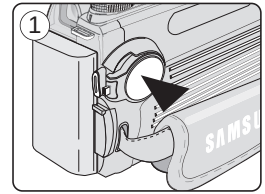

1. Set the **Power** switch to **REC** or **PLAY**.

2. Press the **MENU** button.
   - The menu list will appear.

3. Move the **Joystick** up or down to select **System**, then press the **Joystick(OK)**.

4. Move the **Joystick** up or down to select **Remote**, then press the **Joystick(OK)**.

5. Move the **Joystick** up or down to select **On** or **Off**, then press the **Joystick(OK)**.

6. To exit, press the **MENU** button.

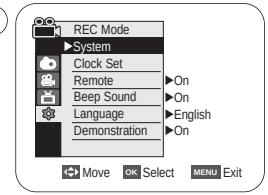

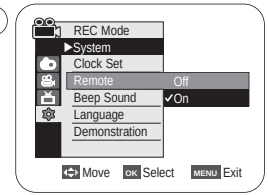

[Notes]

- If you set the Remote to Off in the menu and try to use it, the remote control icon( ) will blink for 3 seconds on the LCD screen and then disappear.
- A separate Remote Control selecting function is provided for the Digital Camera (see page 92).

Adjusting the LCD Screen

- This function works in both REC and PLAY modes.
- Your Camcorder is equipped with a 2.5 inch color Liquid Crystal Display(LCD) screen, which enables you to view what you are recording or playing back directly.
- Depending on the conditions under which you are using the Camcorder (indoors or outdoors for example), you can adjust;
  - LCD Bright
  - LCD Color

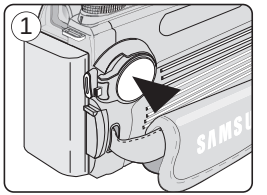

1. Set the **Power** switch to **REC** or **PLAY**.

2. Press the **MENU** button.
   - The menu list will appear.

3. Move the **Joystick** up or down to select **Display**, then press the **Joystick(OK)**.

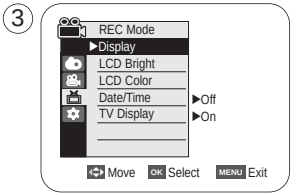

4. Move the **Joystick** up or down to select the item you want to adjust (**LCD Bright** or **LCD Color**), then press the **Joystick(OK)**.

5. Move the **Joystick** up or down to adjust the value of the selected item (**LCD Bright** or **LCD Color**), then press the **Joystick(OK)**.
   - You can set values for **LCD Bright** and **LCD Color** between 0~35.

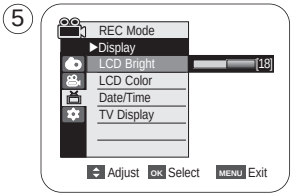

6. To exit, press the **MENU** button.
   - LCD Bright & LCD Color functions do not affect the brightness and color of the image to be recorded.

Using the Viewfinder

✤ The Viewfinder will work when the LCD screen is closed.

Adjusting the Focus

The focus adjustment knob of the Viewfinder enables individuals with vision problems to see clearer images.

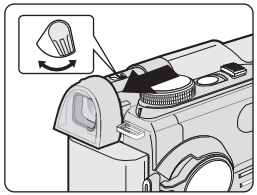

1. Close the LCD screen and pull out the Viewfinder.
2. Use the focus adjustment knob of the Viewfinder to focus the picture.

[Notes]

- Viewing the sun or any strong light source through the Viewfinder for a prolonged period may be harmful, or cause temporary impairment.
- The Viewfinder will work either in PLAY mode with LCD screen closed or in REC mode with LCD screen closed or facing the front.

Inserting and Ejecting a Cassette

- ✤ When inserting a tape or closing the cassette compartment, do not apply excessive force, as it may cause a malfunction.
- ✤ Do not use any tape other than Mini DV cassettes.

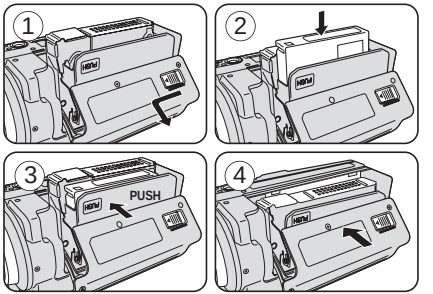

1. Connect a power source and slide the **TAPE EJECT** switch and open the cassette door.
   - The cassette holder automatically rises and opens forward.
2. Insert a tape into the cassette compartment with the tape window facing outward and the protection tab toward the top. (Inserting a Cassette)
   - Remove the cassette tape, which is automatically ejected by pulling the cassette out. (Ejecting a Cassette)
3. Press the area marked **PUSH** on the cassette door until it clicks into place.
   - Be careful to keep the hand strap away from the cassette door when closing it. Closing the cassette door with the hand strap inside may cause damage to the unit.
   - The cassette is loaded automatically.
4. Close the cassette door.

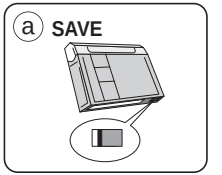

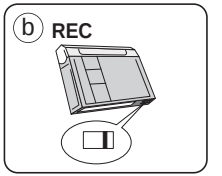

[Note]
When you have recorded something that you wish to keep, you can protect it so that it will not be accidentally erased.

a. Protecting a tape:
Push the safety tab on the cassette so that the hole is uncovered.

b. Removing the tape protection:
If you no longer wish to keep the recording on the cassette, push the safety tab back so that it covers the hole.

How to store a tape
a. Avoid places with magnets or magnetic interference.
b. Avoid humidity and dust prone places.
c. Keep the tape in an upright position and avoid storing it in direct sunlight.
d. Avoid dropping or knocking your tapes.

Making your First Recording

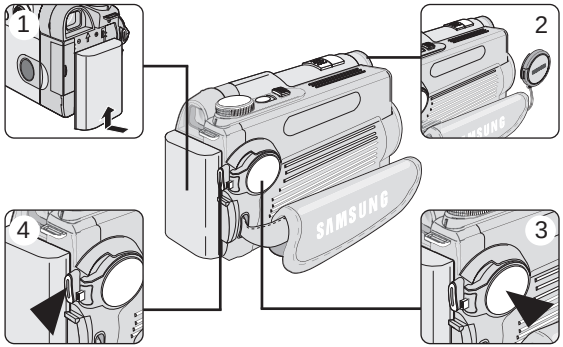

1. Connect a power source to the Camcorder. (see page 22)
   (A Battery pack or a AC Power adapter)
   Insert a cassette. (see page 38)

2. Remove the Lens cover.

3. Set the **Power** switch to **REC**.
   - Open the LCD screen.
     Make sure that **STBY** is displayed.
   - If the write protection tab of the cassette is open (set to save), **STOP** and **Protection !** will be displayed.
     Release the write protection tab to record.
   - Make sure the image you want to record appears on the LCD screen or Viewfinder.
   - Make sure the battery level indicates that there is enough remaining power for your expected recording time.

4. To start recording, press the **Start/Stop** button.
   - **REC ●** is displayed on the LCD screen.

   To stop recording, press the **Start/Stop** button again.
   - **STBY** is displayed on the LCD screen.

[Note]
Detach the Battery pack when you are finished recording to prevent unnecessary battery power consumption.

Using EASY.Q Mode (for Beginners)

- The EASY.Q mode works only in REC mode.
- The EASY.Q mode allows a beginner to easily make good recordings.

1. Set the **Power** switch to **REC**.

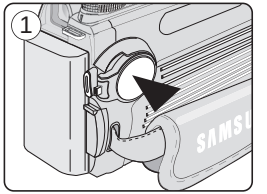

2. By pressing the **EASY.Q** button, all functions on the Camcorder will be set to off and the recording settings will be set to the following basic modes:
   - Battery level, recording mode, counter, date/time, and DIS (☞) will be displayed.
   - The word **EASY.Q** will appear on the LCD screen at the same time.
     However, the Date/Time will only be seen if it has been previously set. (see page 35)

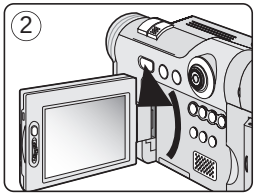

3. Press the **Start/Stop** button to start recording.
   Recording will begin using the basic automatic settings.

4. Press the **EASY.Q** button again in the **STBY** mode and then turn the EASY.Q mode off.
   - The EASY.Q function will not turn off while you are recording.
   - The camcorder will return to the settings that were set prior to activating EASY.Q mode.

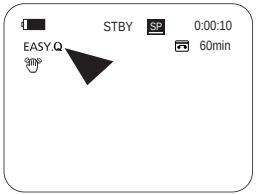

[Notes]

- In EASY.Q mode, certain functions are not available, such as Menu, BLC, Manual focus.
  If you want to use these functions, you must first turn the EASY.Q mode off.
- The EASY.Q mode settings are released when the Battery pack is removed from the Camcorder and must be reset when the Battery pack is replaced.
- EASY.Q mode will not turn off during a recording.
- Photo image recording using the PHOTO button while EASY.Q is set releases DIS function.
- Digital Zoom, Color Nite or Digital Effect is not available in the EASY.Q mode.

IEEE 1394 Data Transfer

System Requirements

- CPU: faster Intel® Pentium III™ 450MHz compatible.
- Operating system: Windows® 98SE, ME, XP, Mac OS (9.1~10.2)
- Main memory: more than 64 MB RAM
- IEEE1394 add-on card or built in IEEE1394 card

Recording with a DV Connection Cable

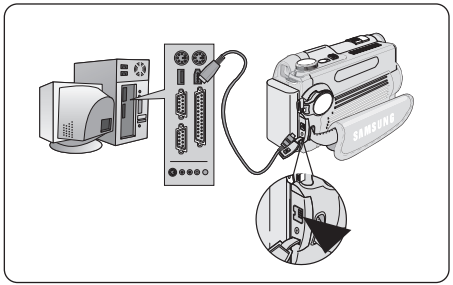

1. Set the **Power** switch to **PLAY**.
2. Connect the DV cable (not supplied) from the DV jack of the Camcorder to the DV jack of the other DV device.
   - Make sure that DV is displayed on the LCD screen.
3. Press the **Start/Stop** button to begin **REC PAUSE** mode.
   - **PAUSE** is displayed on the LCD screen.
4. Start playback on the other DV device while you monitor the picture.
5. Press the **Start/Stop** button to start recording.
   - If you want to pause recording momentarily, press the **Start/Stop** button again.
6. To stop recording, press the ■ (STOP) button.

[Notes]

- When using this Camcorder as a recorder, the pictures that appear on a monitor may seem uneven, however recorded pictures will not be affected.
- Operation is not guaranteed for all the recommended computer environments mentioned above.

Specifications

Model Name	SC-D6550	
Camcorder System		
Video Signal	NTSC	
Video Recording System	2 Rotary heads, Helical Scanning System	
Audio Recording System	Rotary heads, PCM system	
Usable Cassette	Digital Video tape: 0.25 inch (6.35mm) MiniDV cassette	
Tape Speed	SP: approx. 0.74 inch/s(18.81mm/s), LP: approx. 0.5 inch/s(12.56mm/s)	
Tape Recording Time	SP: 60 minutes, LP: 90 minutes (when using DVM60)	
FF/REW time	Approx. 180 sec (when using DVM60)	
General	**CAMCORDER**	**CAMERA**
Format	MiniDV	JPEG (DCF)
Dimension (WxHxD)	60.5 X 77 X 125 (mm) / 2.4 X 3.0 X 4.9 (inches)	
Weight (Net)	440 g / 9.7 lb (Except the Lithium Ion Battery Pack and Tape)	
Power Consumption	4.3W (LCD on) / 4.0W (CVF on) for recordings	
Power Source	DC 8.4V, LI-Ion Battery pack: 7.4V	
Power Source Type	Lithium-Ion battery pack, Power supply (100V ~ 240V, 50/60 Hz)	
Built-in Microphone	Omni-directional Stereo condenser microphone	
LCD screen		
Size	2.5”	
Pixel	112K, Trans Reflective	
LCD Frame Coverage	**CAMCORDER**	**CAMERA**
	-	88%
Bright / Color Adjust	YES / YES	
Rotation Angle	90 + 270 deg	
Mirror	YES	
Viewfinder		
Display Device	Color	
Size	0.3”	
Pixel	123K	
Diopter Adjust	YES	

- These technical specifications and design may be changed without notice.

Specifications

Lens	CAMCORDER	CAMERA
Optical Zoom Ratio	10x	3x
Digital Zoom Ratio	900x	12x
Focal Length (f)	2.4 ~ 24mm	7.7 ~ 23.1mm
F. No (Wide / Tele)	1.8 / 2.4	2.8 / 4.9
Zooming Speed	Variable 4 step	1 step
Filter Diameter	25	Not Available
Macro	Wide Macro	1.6~31.5 inches (Wide), 11.8~31.5 inches (Tele)
CCD	**CAMCORDER**	**CAMERA**
Size	1/6" Charge Coupled Device	1/2.5" Charge Coupled Device
Pixel (Max / Effective)	680K / 340K	5.25M/5.1M
Flash	NO	YES
Image Stabilizer	DIS	NO
Auto Focus / Manual Focus	YES / YES	YES / YES
Shutter Speed (Auto)	1/60 ~ 1/10,000	2 ~ 1/2,000
Manual Shutter Speed	1/60 ~ 1/10,000 8 step	Night Scene Mode, 15 ~ 1/2,000
Auto White Balance	YES	YES
Metering		TTL Automatic, 31.5 inch ~ infinity
Connectors		
Video output	1 Vp-p (75Ω terminated)	
S-VIDEO output	Y: 1 Vp-p, 75Ω C: 0.2861 Vp-p, 75Ω	
Audio output	7.5 dBs(600Ω terminated)	
DV input / output	4-pin IEEE1394	
USB output	Mini-B type	
External MIC	Ø 3.5 stereo	
Others		
Operating Temperature	0 ~ 42°C / 32 ~ 104°F	
Storage Temperature	-20 ~ 60°C / -4 ~ 140°F	

FCC Compliance

THIS DEVICE COMPLIES WITH PART 15 OF THE FCC RULES.
OPERATION IS SUBJECT TO THE FOLLOWING TWO CONDITIONS:
(1) THIS DEVICE MAY NOT CAUSE HARMFUL INTERFERENCE,
AND (2) THIS DEVICE MUST ACCEPT ANY INTERFERENCE
RECEIVED, INCLUDING INTERFERENCE THAT MAY CAUSE
UNDESIRED OPERATION

THE MANUFACTURER IS NOT RESPONSIBLE FOR ANY RADIO OR TV INTERFERENCE CAUSED UNAUTHORIZED MODIFICATIONS TO THIS EQUIPMENT. SUCH MODIFICATIONS COULD VOID THE USER'S AUTHORITY TO OPERATE THE EQUIPMENT.

USER INFORMATION

This equipment has been tested and found to comply with the limits for a Class B digital device, pursuant to Part 15 of the FCC Rules. These limits are designed to provide reasonable protection against harmful interference in a residential installation.
This equipment generates, uses and can radiate radio frequency energy and, if not installed and used in accordance with the instructions, may cause harmful interference to radio communications. However, there is no guarantee that interference will not occur in a particular installation. If this equipment does cause harmful interference to radio or television reception, which can be determined by turning the equipment off and on, the user is encouraged to try to correct the interference by one or more of the following measures:

- Reorient or relocate the receiving antenna.
- Increase the separation between the equipment and receiver.
- Connect the equipment into an outlet on a circuit different from that to which the receiver is connected.
- Consult the dealer or an experienced radio/TV technician for help.