LASER FACSIMILE

User's Guide

Laser Facsimile

1120L/1160L
F101/F102
LF110/LF115m
3710

Trademarks

- Windows, Windows 95, Windows 98, Windows Me, Windows NT, Windows 2000 and Windows XP are trademarks of Microsoft corporation.
- Other names and trademarks mentioned in this manual are trademarks of their respective holders.

Contents

Chapter 1 Getting Started

Introduction

Welcome! — 1.1
Contents — 1.3
Identifying Parts — 1.4

Setting Up Your Machine

Choosing a Location — 1.9
Preparing Your Machine for Use — 1.9
Attaching the Supports — 1.10
Connecting to the Phone Line — 1.11
Connecting to the Computer (MFP model only) — 1.12
Plugging In the Power — 1.13
Loading Paper — 1.13
Installing the Toner Cartridge — 1.16
Setting the Date and Time — 1.18
Setting Your Fax Number and Name — 1.19

Chapter 2 Stand-alone Fax

Setting Up Stand-alone Fax System

Setting Volume — 2.1
Setting Alert Tones — 2.2
Setting User-Selectable System Options — 2.2

Sending a Fax

Preparing Documents for Faxing or Copying — 2.7
Setting Document Resolution and Contrast — 2.8
Loading Documents — 2.9
Sending a Fax Automatically — 2.10
Sending a Fax After Talking — 2.11

Receiving a Fax

About Reception Modes ---------- 2.12
Loading Paper for Receiving Faxes ---------- 2.13
Receiving Automatically in FAX Mode ---------- 2.13
Receiving in AUTO Mode ---------- 2.14
Receiving Automatically in ANS/FAX Mode ---------- 2.14
Receiving Manually in TEL Mode ---------- 2.15
Receiving Manually Using Remote Receive Start Code --- 2.15

Making a Copy

Copying Overview ---------- 2.16
Making a Single Copy ---------- 2.16
Using Advanced Copy Features ---------- 2.17

Automatic Dialling

How To Enter a Name Using the Number Keys --------- 2.18
One-Touch Dialling ---------- 2.20
Speed Dialling ---------- 2.22
Searching for a Number in the Memory ---------- 2.24

Transmission Options

Broadcasting ---------- 2.25
Delayed Fax ---------- 2.26
Priority Fax ---------- 2.28
Polling ---------- 2.29
Adding Documents To a Scheduled Operation --------- 2.31
Cancelling a Scheduled Operation ---------- 2.31

Additional Functions

Monitoring a Dual Job Status ---------- 2.32
Forwarding Received Faxes ---------- 2.32
Printing Reports ---------- 2.33
Group Dialling (for Multi-Address Transmission) ---------- 2.35

Contents (continued)

Chapter 3 Printing and Scanning (MFP model only)

Installing Software

System Requirements — 3.1
Installing the Software — 3.1
Uninstalling the Software — 3.3

Print Media

Selecting Print Media — 3.5
Using the Automatic Paper Input Tray — 3.7
Using the Manual Paper Input Tray — 3.9
Specialty Paper Guidelines — 3.12

Printing

Printing a Document — 3.13
Cancelling a Print Job — 3.16
Printing Help — 3.17
Printing Several Pages Per Sheet — 3.18
Scaling Your Document — 3.19
Fitting Your Document to a Selected Paper Size — 3.20
Printing Posters — 3.21
Printing Watermarks — 3.22
Using Page Overlays — 3.24
Printing in a Network Environment — 3.28

Scanning

Scanning from a Windows Application — 3.30
Type1100 TWAIN for Scan Window — 3.31

Chapter 4 Maintenance

Guidelines for Maintenance — 4.1
Clearing Memory — 4.1
Cleaning the OPC Drum — 4.2
Adjusting Shading — 4.2
Setting the Machine to be Checked by Phone — 4.3
Sending Toner Low Information to the Service Company — 4.3
Cleaning the Machine — 4.4
Managing the Toner Cartridge — 4.7
Automatic Document Feeder Rubber Pad Replacement 4.10

Chapter 5 Troubleshooting

Clearing Paper Jams — 5.1
LCD Error Messages — 5.5
Fax Problems — 5.7
General Printing Problems (MFP model only) — 5.9
Print Quality Problems — 5.11

Appendix

Connecting Other Devices to the Phone line — A.1
Specifications — A.4
Safety Information — A.6
Index — A.13

Environmental and Safety Consideration

Laser Safety Statement

The printer is certified in the U.S. to conform to the requirements of DHHS 21 CFR, chapter 1 Subchapter J for Class I(1) laser products, and elsewhere is certified as a Class I laser product conforming to the requirements of IEC 825.

Class I laser products are not considered to be hazardous. The laser system and printer are designed so there is never any human access to laser radiation above a Class I level during normal operation, user maintenance, or prescribed service condition.

CAUTION: Use of controls or adjustment or performance of procedures other than those specified in this manual might result in hazardous radiation exposure.

WARNING

Never operate or service the printer with the protective cover removed from Laser/Scanner assembly. The reflected beam, although invisible, can damage your eyes.

CAUTION - INVISIBLE LASER RADIATION WHEN THIS COVER OPEN. DO NOT OPEN THIS COVER.

VORSICHT - UNSICHTBARE LASERSTRAHLUNG, WENN ABDECKUNG GEÖFFNET. NICHT DEM STRAHL AUSSETZEN.

ATTENTION - RAYONNEMENT LASER INVISIBLE EN CAS D'OUVERTURE.EXPOSITION DAN GEREUSE AU FAISCEAU.

ATTENZIONE -RADIAZIONE LASER INVISIBILE IN CASO DI APERTURA.
EVITARE L'ESPOSIZIONE AL FASCIO.

PRECAUCION -RADIACION LASER IVISIBLE CUANDO SE ABRE. EVITAR EXPONERSE AL RAYO.

ADVARSEL - USYNLIG LASERSTRÅLNING VED ÅBNING NÅR SIKKERHEDSBRYDERE ER UDE AF FUNKTION. UNDGÅ UDSAETTELSE FOR STRÅLNING.

ADVARSER - USYNLIG LASERSTRÅLNING NÅR DEKSEL ÅPNES. STIRR IKKE INN I STRÅLEN. UNNGÅ EKSPONERING FOR STRÅLEN.

VARNING - OSYNLIG LASERSTRÅLNING NÄR DENNA DEL ÄR ÖPPAND OCH SPÄRREN ÄR URKOPPLAD. BETRAKTA EJ STRÅLEN. STRÅLEN ÄR FARLIG.

VARO! - AVATTAESSA JA SUOJALUKITUS OHITETTAESSA OLET ALTTIINA NÄKYMÄTTÖMÄLLE LASERSÄTEILYLLE ÄLÄ KATSO SÄTEESEEN.

Ozone Safety

During normal operation, this machine produces ozone. the ozone produced does not present a hazard to the operator. However, it is advisable that the machine be operated in a well ventilated area.

If you need additional information about ozone, please request your nearest dealer.

Power Saver

This printer contains advanced energy conservation technology that reduces power consumption when it is not in active use.

When the printer does not receive data for an extended period of time, power consumption is automatically lowered.

The energy star emblem does not represent EPA endorsement of any product or service.

Radio Frequency Emissions

FCC Regulations

This equipment has been tested and found to comply with the limits for a Class B digital device, pursuant to Part 15 of the FCC Rules. These limits are designed to provide reasonable protection against harmful interference in a residential installation. This equipment generates, uses and can radiate radio frequency energy and, if not installed and used in accordance with the instructions, may cause harmful interference to radio communications. However, there is no guarantee that interference will not occur in a particular installation.

If this equipment does cause harmful interference to radio or television reception, which can be determined by turning the equipment off and on, the user is encouraged to try to correct the interference by one or more of the following measures:

- Reorient or relocate the receiving antenna.
- Increase the separation between the equipment and receiver.
- Connect the equipment into an outlet on a circuit different from that to which the receiver is connected.
- Consult the dealer or an experienced radio/TV technician for help.

Do not make any changes or modifications to the equipment unless otherwise specified in the manual. If such changes or modifications should be made, you must first stop operation of the equipment.

Use of shielded cable is required to comply with Class B limits in Subpart B of Part 15 of FCC Rules.

CAUTION: Changes or modifications not expressly approved by the manufacture responsible for compliance could void the user's authority to operate the equipment.

Canadian Radio Interference Regulations

This digital apparatus does not exceed the Class B limits for radio noise emissions from digital apparatus as set out in the interference-causing equipment standard entitled "Digital Apparatus", ICES-003 of the Industry and Science Canada.

Cet appareil numérique respecte les limites de bruits radioélectriques applicables aux appareils numériques de Classe B prescrites dans la norme sur le matériel brouilleur: "Appareils Numériques", ICES-003 édictée par l'Industrie et Sciences Canada.

Declaration of Conformity

Notice to Users in EEA Countries

This product complies with the essential requirements and provisions of Directive 1999/5/EC of the European Parliament and of the Council of 9 March 1999 on radio equipment and telecommunications terminal equipment and the mutual recognition of their conformity.

Notice to Users Accessing Analog PSTN in EEA Countries

This product is designed to be able to access analog PSTN in all EEA countries. Local PSTN compatibility is dependent on software switch settings. Please contact your service representative if relocating this product to another country. In the event of problems, please contact your service representative in the first instance.

Ricoh: The CE Decalration of Conformity is available on the Internet at URL: http://www.ricoh.co.jp/fax/ce_doc/

NRG: The CE Declaration of Conformity is available on the Internet at URL: http://www.ricoh.co.jp/fax/ce_doc/

LANIER: The CE Declaration of Conformity is available by accessing the URL: http://www.lanier-europe.com

Memo

chapter 1

Getting Started

This chapter provides information on the following topics:

Introduction

- Welcome!
- Contents
- Identifying Parts

Setting Up Your Machine

- Choosing a Location
- Preparing Your Machine for Use
- Attaching the Supports
- Connecting to the Phone Line
- Connecting to the Computer (MFP model only)
- Plugging In the Power
- Loading Paper
- Installing Toner Cartridge
- Setting the Date and Time
- Setting Your Fax Number and Name

Introduction

Welcome!

Thank you for purchasing this product, a powerful business tool with the capabilities of a full range of office equipment. With this machine, you can:

Fax

Use this product as a **full-featured stand-alone fax machine** to send and receive faxes. Perform advanced tasks such as delayed transmission, broadcasting, and unattended memory sending.

Print (MFP model only)

You can get 600 x 600 dpi high-quality laserjet printing from this machine. You can create professional documents using the creative printing features on the various kinds of print media, such as plain papers, envelopes, transparencies, label, and so on.

Copy

Make up to **99 copies** of a 20-pages document without having to connect to a PC. You can adjust the contrast, enlarge or reduce the copies and collate.

Scan (MFP model only)

Scan important documents to create electronic files. Use the scanner to add photo or graphic images to other software applications or to jazz up your projects.

Contents

Here's what comes with this machine.

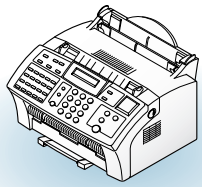

Fax machine

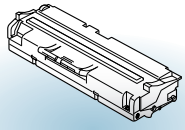

Toner cartridge

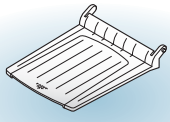

Document output support

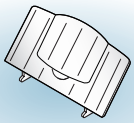

Document input support

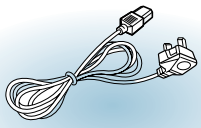

Power cord *

Telephone line cord *

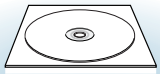

software CD-ROM
(for MFP model only)

User's Guide

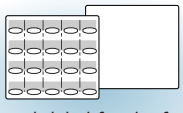

One-touch label for the front panel
and a panel sheet (for Europe only)

*: These may look different depending on the country.

Notes:

- You should use the Telephone line cord which is supplied with the machine. If you are replacing it with the other vendor's part, it should be AWG #26 or lower gage.
- Power cord must be plugged in grounded power socket.

Identifying Parts

Before setting up your machine, make sure you identify the following parts related to the scanner and paper print paths.

Identifying Scanner Path Parts

Items to be faxed, copied, or scanned use the scanner path which consists of the following parts:

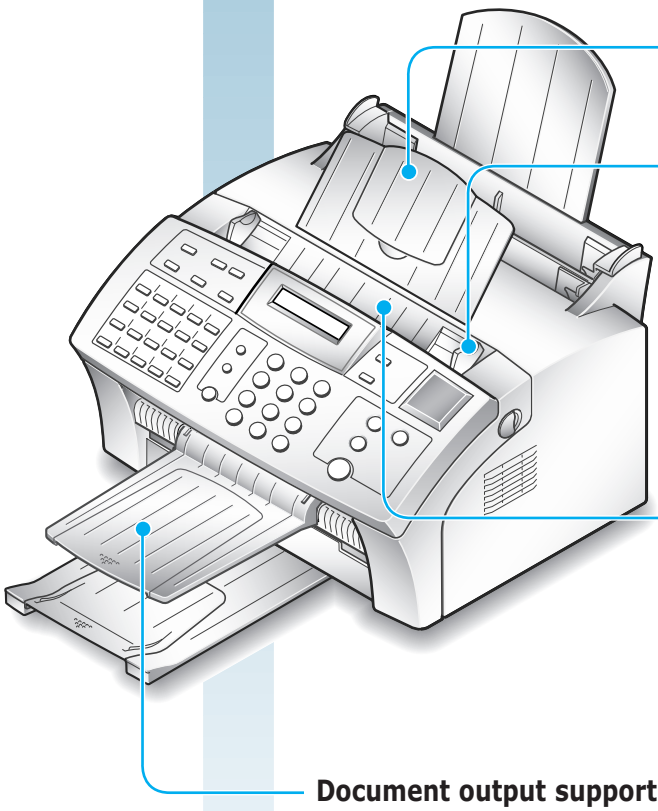

Document input support

Supports original documents.

Document guides

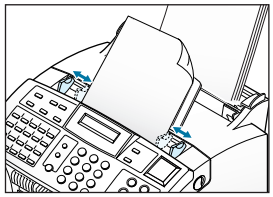

Aligns documents.

Automatic document feeder

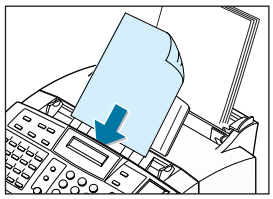

Loads up to 20 pages at a time.

Document output support

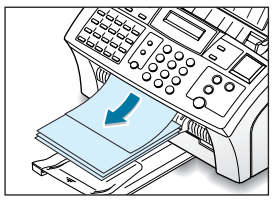

Supports the original document when faxing, copying, or scanning is complete.

Identifying Printer Path Parts

Paper for printing, receiving faxes and copying follow the printer path. This path consists of the following parts:

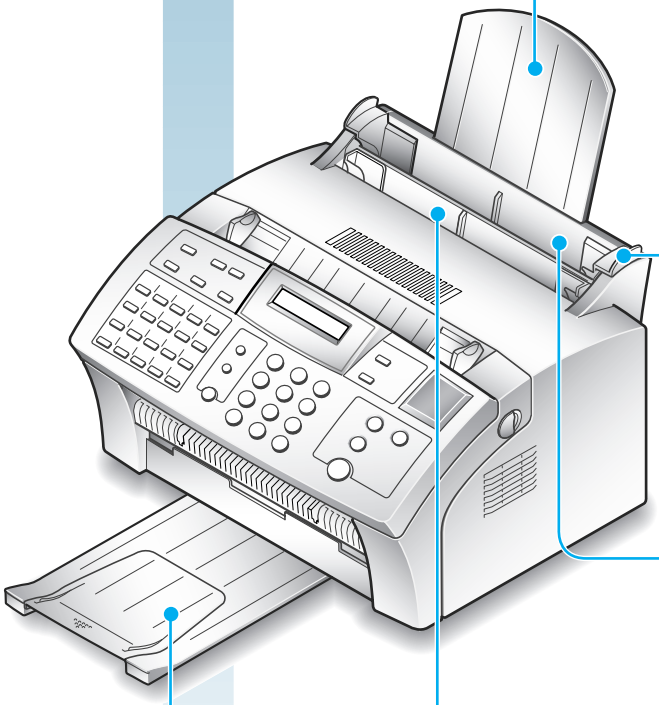

Paper input support

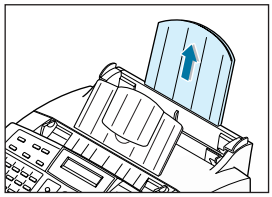

Support the print media

Paper guides

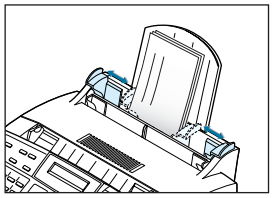

Aligns paper.

Automatic paper input tray

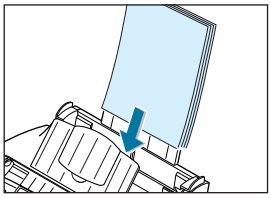

Holds paper.

Manual paper input tray
(For MFP model only)

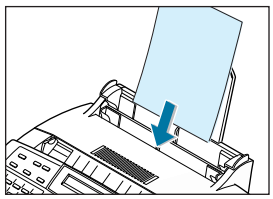

Use to feed paper one sheet at a time.

Paper output tray

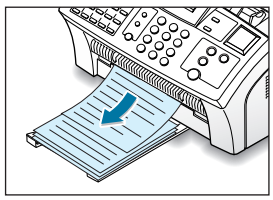

Supports the printed pages.

Identifying Front Panel Features

Look for the following keys and features on the front panel. These features are used to fax documents, make copies, and adjust settings.

User Tools
Use to set up various system options.

Scroll/Volume
Use to scroll the menu items or us to move the cursor left or right through the display. Also, use to adjust the ringer volume.

Search/Delete
Use to search for a number in memory or to delete the last digit when typing text.

Report/Help
Use to print various reports and the help list.

Trans. Option
Use to access advanced fax operations.

Twenty One-Touch Buttons
Store frequently dialled fax numbers.

LCD Display
Displays messages and menu settings.

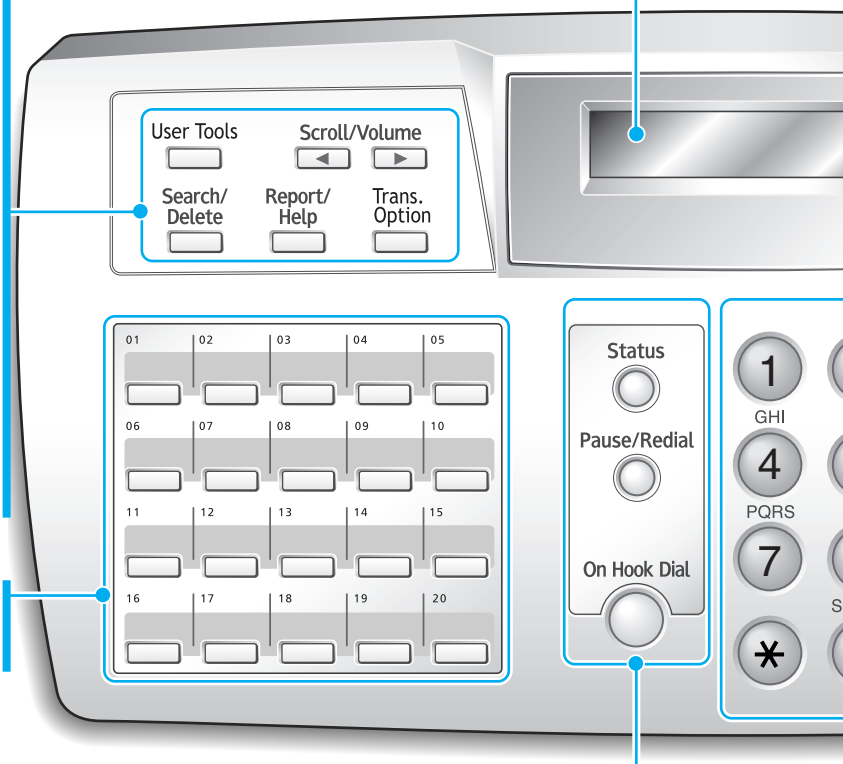

Status
Use to switch the display status while performing dual jobs.

Pause/Redial
Use to redial the last fax number or to insert a pause into a fax number.

On Hook Dial
Use to dial numbers without picking up the handset. Also, use to make a voice call after sending or receiving a fax.

Rcv. Mode/Contrast
When a document is loaded, choose the contrast characteristic of copied or transmitted documents.
When a document is not loaded, choose the receive mode to use.
The selected mode is displayed in Standby mode.

Resolution
Choose the resolution of documents.

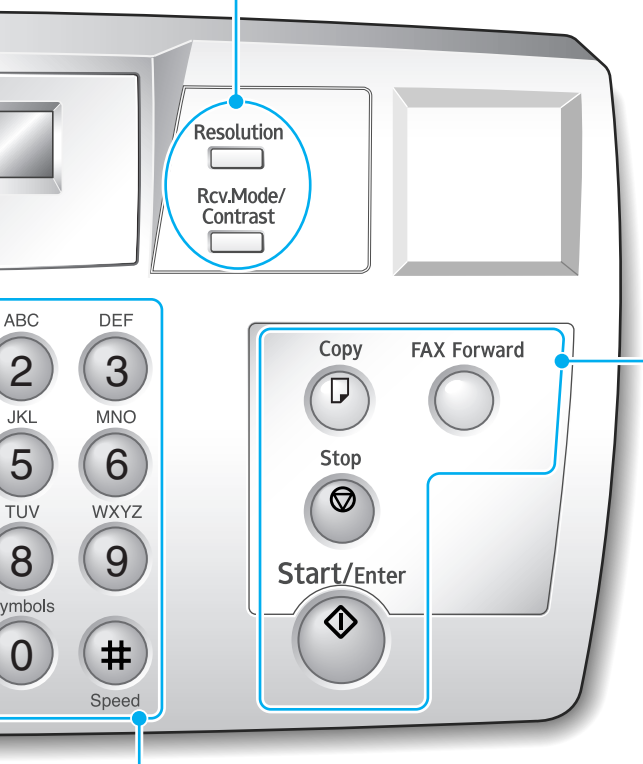

Fax Forward
Allows you to forward the received faxes to the defined remote fax machine at a specified duration.

Copy
Makes a copy of a document.

Start/Enter
Starts a job. Also use to activate the selection shown on the display.

Stop
Stops an operation at any time.

Number Keypad
Use to enter fax numbers manually or to enter letters.

Speed(#)
Use to send documents by entering a registered 2-digit number.

Identifying Connecting Parts and Others

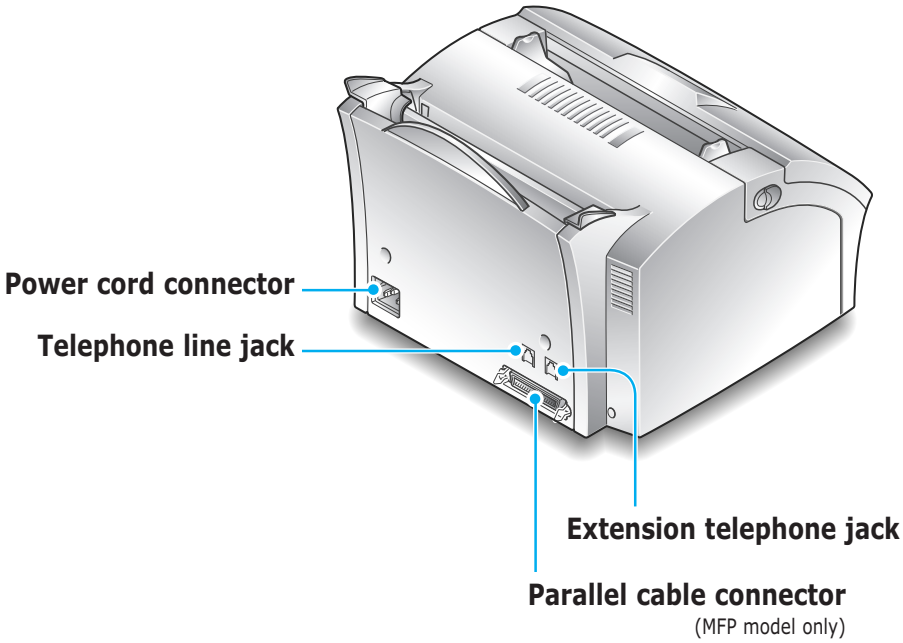

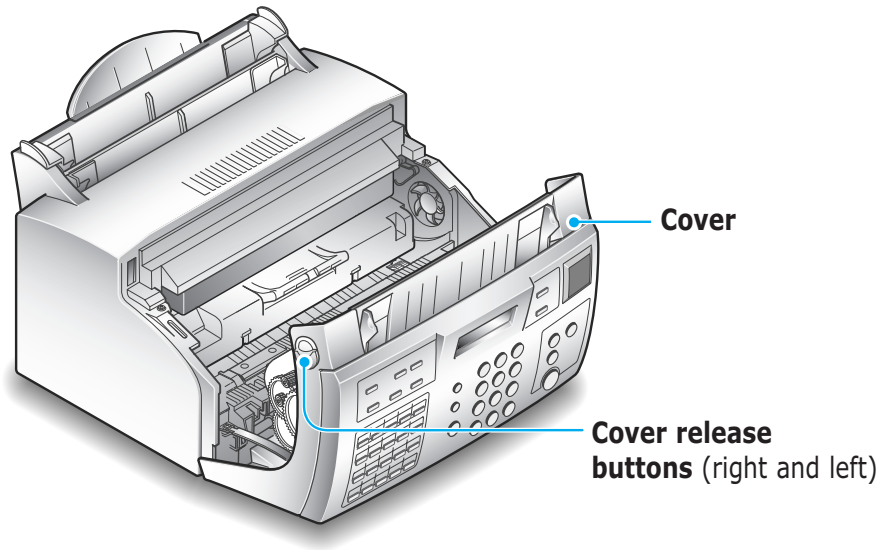

Setting Up Your Machine

Choosing a Location

For the trouble-free operation of your machine, place it on a flat, stable surface near your workstation. Leave enough space to allow for easy paper loading and exiting, as well as opening the front cover.

Do not place your machine:

- In direct sunlight.
- Near heat sources or air conditioners.
- In a dusty or dirty environment.

Preparing Your Machine for Use

When you take this machine out the box, note that it has been packaged to protect it during shipping. Before you use the machine, make certain that you check for the following items:

- Remove all tapes.
- Remove all packing materials.

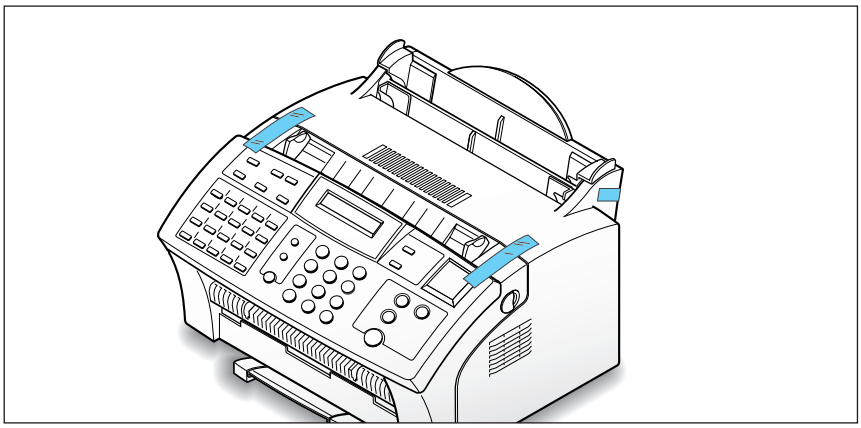

Attaching the Supports

Document Input Support

Insert the document input support with the groove pointing to the rear top of the machine.

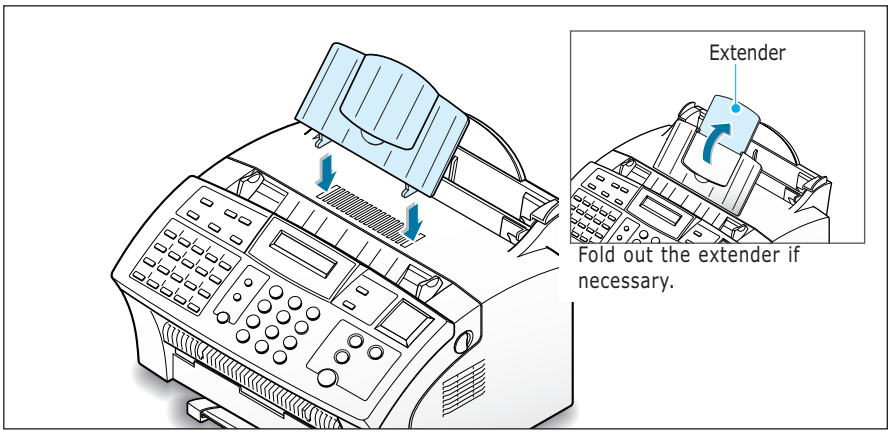

Document Output Support

Insert the two tabs on the document output support into the slots on the front of your machine.

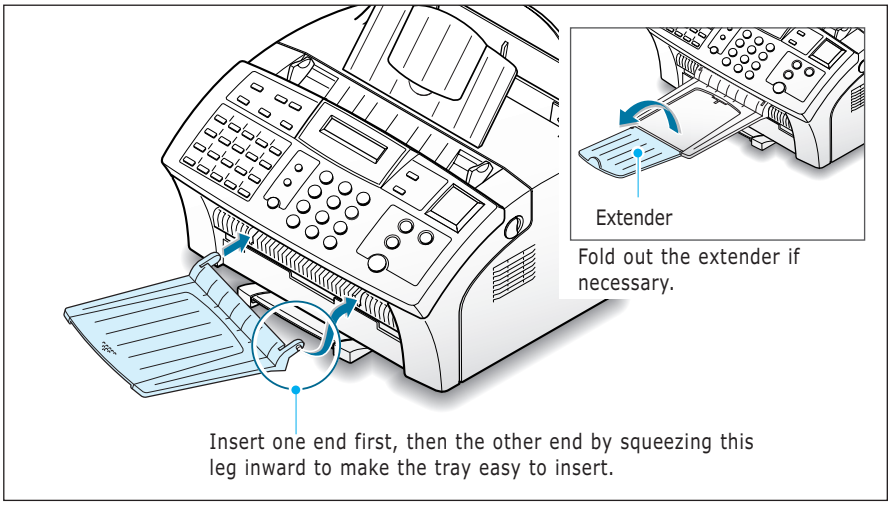

Note: This machine is shipped with the paper output tray already installed. Extend the tray to use.

Fold out the extender if necessary.

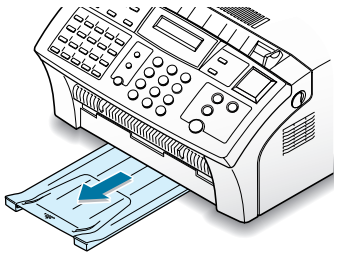

Connecting to the Phone Line

For proper operation, this machine must be connected to the wall jack. Once you have decided which wall jack you will be using, check a box below and follow the instructions.

☐ **I only have one phone line coming to this wall jack.** (This includes two phone numbers on one line with distinctive ring service.) Go to "To Connect to a Wall Jack that Has Only One Phone Line" on this page.

☐ **I have two phone lines coming to this wall jack.** Go to "To Connect to a Wall Jack that Has Two Phone Lines" on page 1.12.

To Connect to a Wall Jack that has Only One Phone Line

1. Plug the included telephone cord into the jack on the back of the unit marked the word **LINE**.

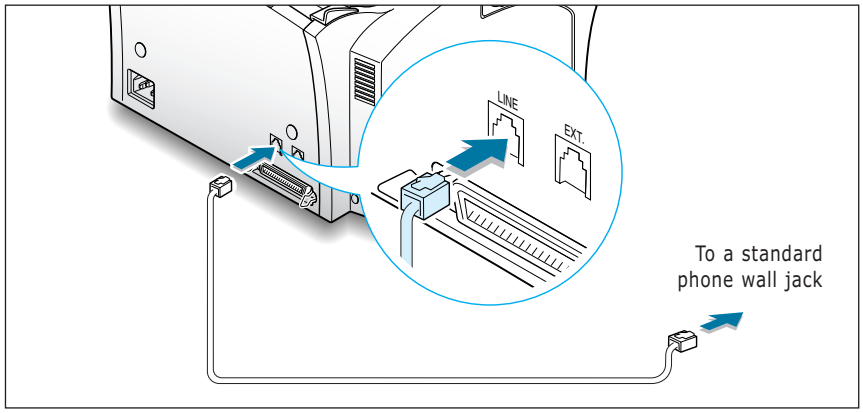

2. If a telephone cord is plugged into the wall jack, unplug the cord and set it aside.

3. Plug the other end of the phone cord into the wall jack.

Notes:

- If you are connecting other devices such as a telephone to the phone line, go to Appendix "Connecting Other Devices To the Phone Line" on page A.1.
- If you are not connecting other devices, go to "Plugging In the Power" on page 1.13.

To Connect to a Wall Jack that Has Two Phone Lines

1. Plug the included telephone cord into the jack on the back of the unit marked the word **LINE**.

2. If a telephone cord is plugged into the wall jack, unplug it and set it aside.

3. If you do not have a wall jack that has a built-in splitter, plug a phone unit splitter (not included) into the wall jack.

4. Plug the cord into the side of the phone unit splitter for the fax number.

Notes:

- If you are connecting other devices such as a telephone to the same phone line, go to Appendix "Connecting Other Devices To the Phone Line" on page A.1.
- If you are not connecting other devices, go to "Plugging In the Power" on page 1.13.

Connecting to the Computer (MFP model only)

Your machine has a parallel port which allows use with a Windows PC.

Connecting to the Computer Using the Parallel interface

1. Plug the supplied parallel printer cable into the connector on the back of your machine. Push the metal clips down to fit inside the notches on the cable plug.

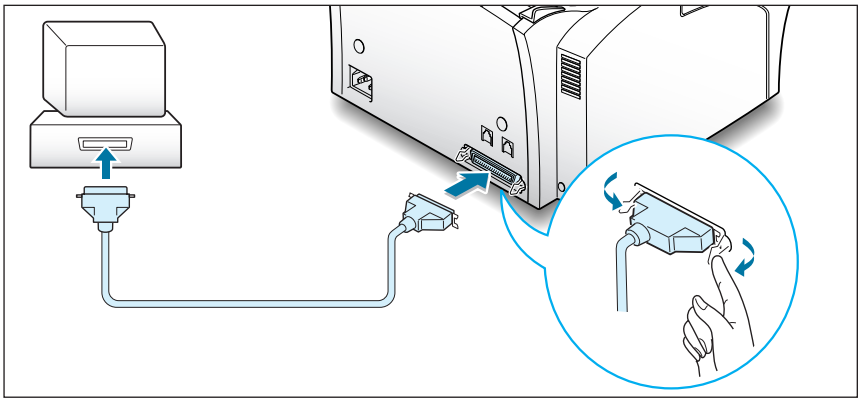

2. Connect the other end of the cable to the parallel interface port on your computer. See your computer documentation for more information.

Plugging In the Power

Plug one end of the cord into the back of the machine and the other end into a standard AC power outlet.

This machine will turn on and the display will show 'SYSTEM INITIAL'. If there is no paper loaded, the displays will shows 'NO PAPER.' then if there is no cartridge installed, the display will show 'JAM/NO CARTRIDGE'.

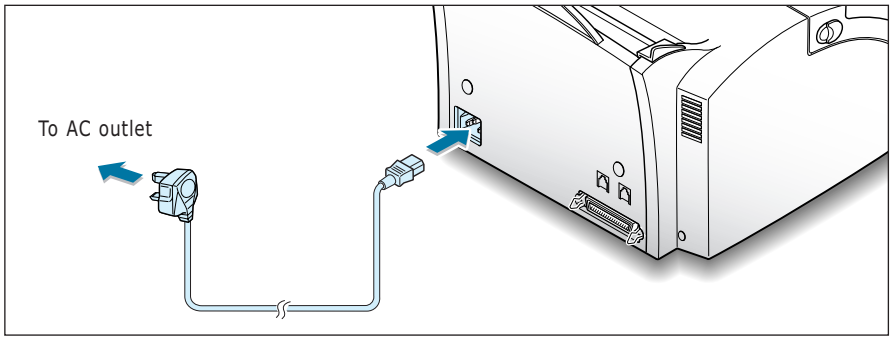

To turn off, unplug the power cord.

Loading Paper

For best results, use high quality xerographic paper. The automatic paper input tray can hold a maximum of 150 sheets of plain paper. The maximum capacity may be less, depending on the paper thickness.

Note: For stand-alone copy and fax operations, this machine supports A4, letter, and legal paper. After loading paper, make sure that you select the correct paper size. For more information on setting the paper size, see 'Setting User-Selectable System Options' on page 2.2.

1. Pull the paper input support completely out of the unit.

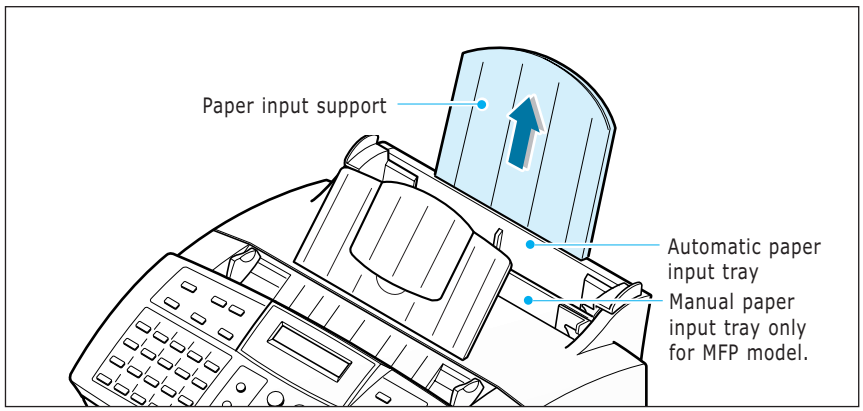

2. Remove a stack of paper from its packaging. Tap the stack on a flat surface to even it up.

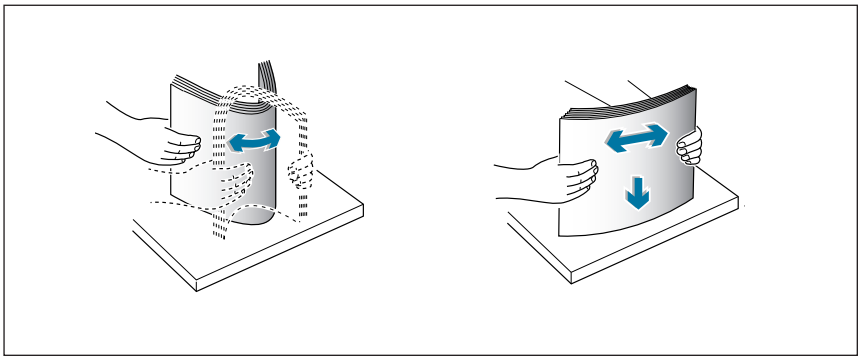

3. Insert the paper with the print side facing you.

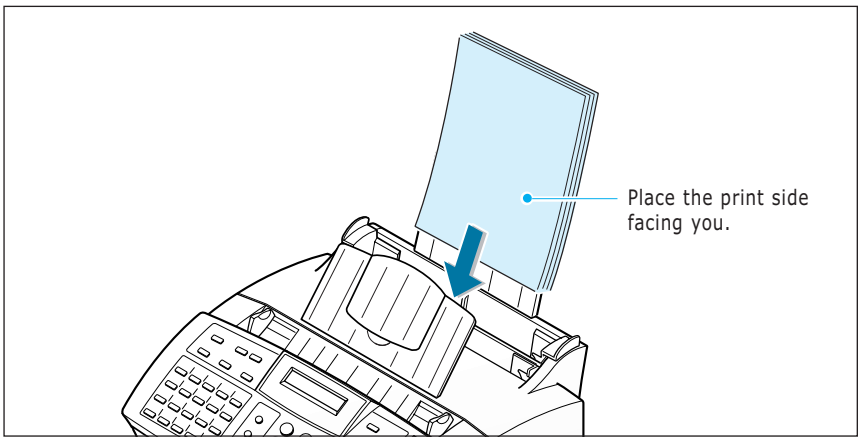

4. Adjust the paper guides to the width of the print media. Slide the guides until they lightly touch the stack of print media. Do not bend the print material.

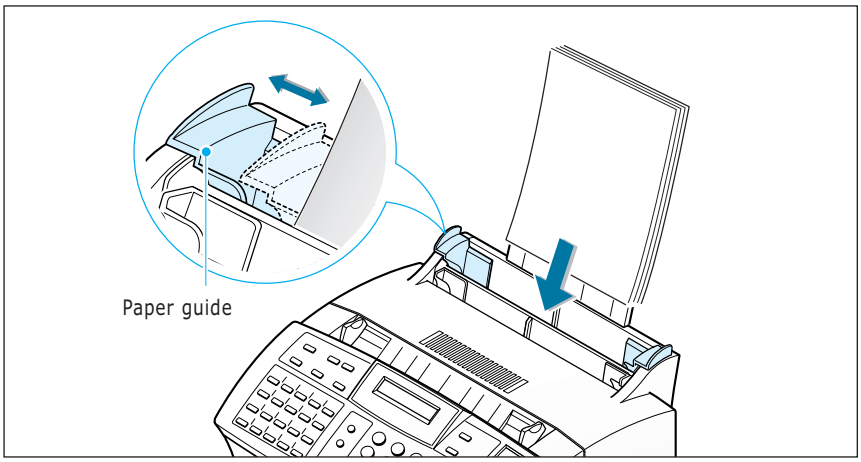

Paper Type and Size

Satisfactory print and receive quality can be obtained with many types of plain paper. Since the quality of plain paper varies widely, test the print quality before buying large quantities of paper. Your machine uses a variety of papers including:

- Xerographic paper
- Bond paper
- Dual-purpose paper

Because all papers vary in physical characteristics, you can receive mixed results from different packages of paper even through the packages contain the same paper. If you encounter undesirable results, try the other side of the paper, a different type, or another package of the same kind of paper.

DO NOT use the following types of paper with your machine:

- Continuous form feed paper
- Synthetic paper
- Thermal paper
- Multi-sheet forms and documents
- Chemically treated paper
- Papers with raised, embossed lettering

To load paper with a preferred print side:

- If you are using xerographic paper, load the paper with the preferred print side facing down.
- If you are using letterhead or bond paper, load the paper with the preferred side facing up.

The following papers can be used in your machine for fax:

- Letter : 216 x 279 mm (8.5 x 11.0 in.) - 60 g/m^2 ~ 90 g/m^2 (16 ~ 24 lb)
- A4 : 210 x 297 mm (8.3 x 11.7 in.) - 60 g/m^2 ~ 90 g/m^2 (16 ~ 24 lb)
- Legal : 216 x 356 mm (8.5 x 14.0 in.) - 60 g/m^2 ~ 90 g/m^2 (16 ~ 24 lb)

Installing the Toner Cartridge

1. Pulling the cover release buttons found on both sides of the machine toward you, open the cover.

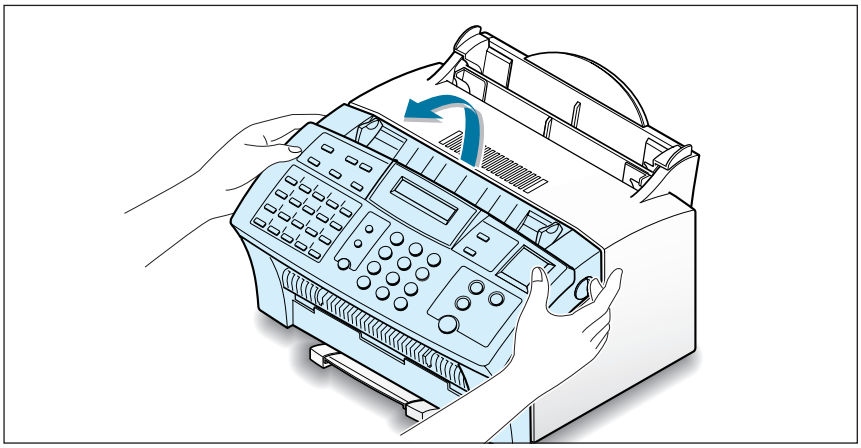

2. Unpack the cartridge from its plastic bag, and then remove the paper rolled the cartridge.

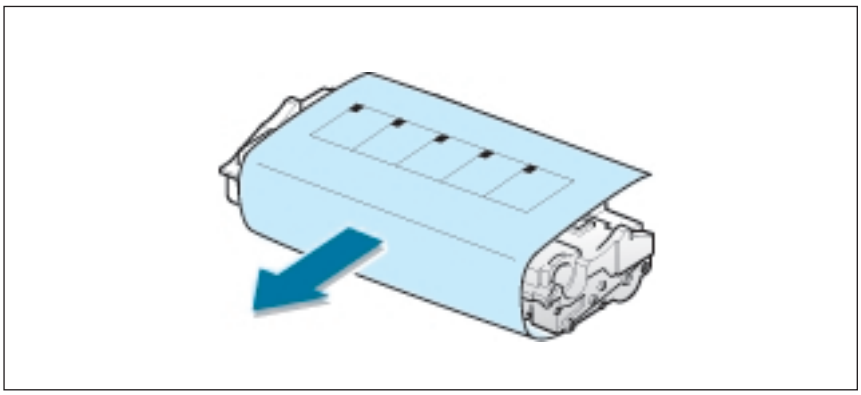

3. Shake the cartridge from side to side 5 or 6 times to redistribute the toner evenly inside the cartridge.

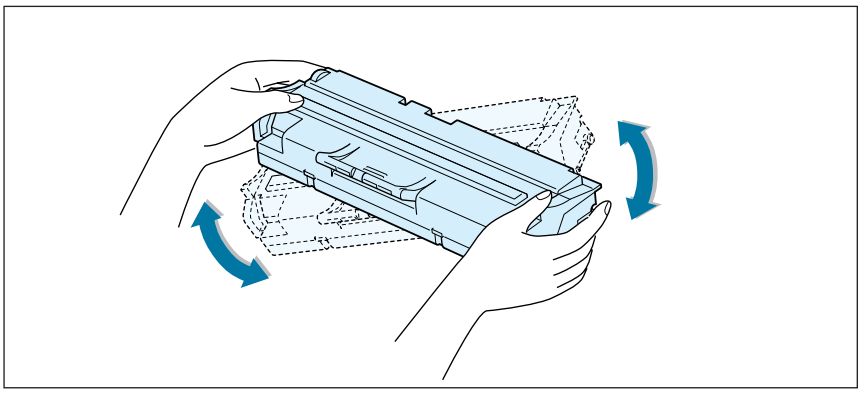

4. Find the cartridge slots inside the machine, one on each side.

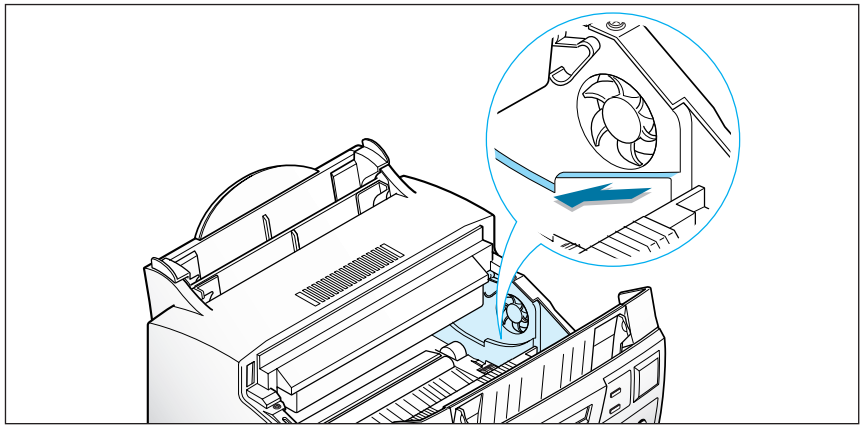

5. Grasp the handle at the front of the cartridge and slide it down between the cartridge slots, and push it firmly.

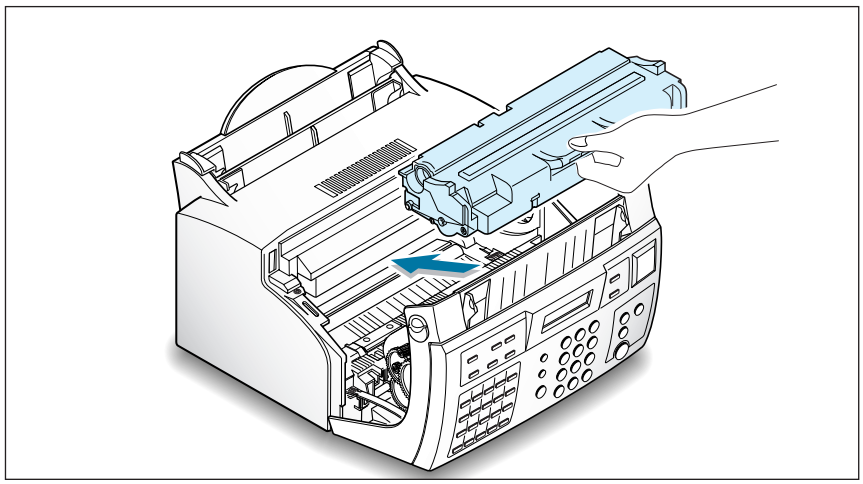

6. Close the cover. Make sure that the cover is securely closed.

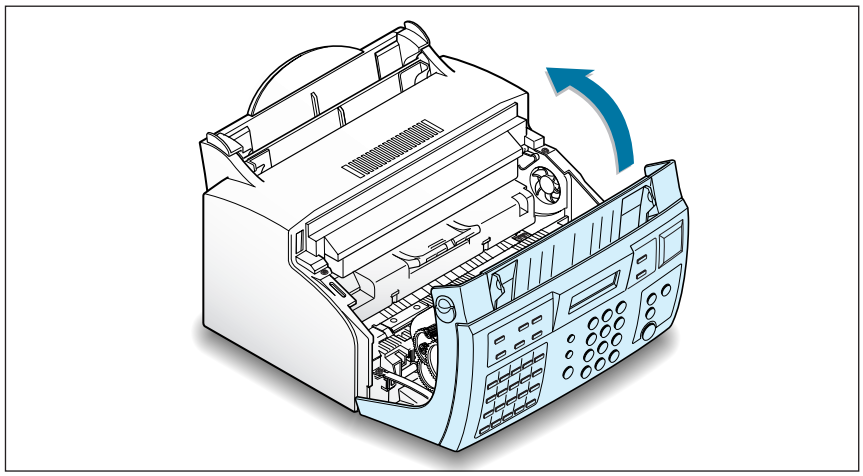

Setting the Date and Time

The current date and time are shown on the display when the machine is on and ready for use (Standby mode). The date and time are printed on all transmitted faxes.
When you install this series for the first time, or when the product is without power for about 15 seconds, the display prompts you to reset the date and time.

SET DATE & TIME

1. Press **User Tools** on the front panel. the display shows the first setup menu; FAX NUMBER/NAME.

2. Press ◀ or ▶ until 'TIME/DATE SETUP' appears, then press **Start/Enter** to access the Time/Date Setup menu.

3. The display asks you to choose a date format. Press **Start/Enter**.

4. Press ◀ or ▶ until you find the desired date format, then press **Start/Enter**.

   If you select USA, the date appears in format of Month-Day-Year. The EUROPE format will be displayed in format of Day-Month-Year.

   The display shows the currently set date and time using the selected date format and asks you to set the month.

   04-01-2001 10:30 (USA Format)

5. Enter the correct date and time for each item using the number keypad. Each time you enter the appropriate number, the display asks you to enter the next item in the following order: MONTH, DATE, YEAR, HOUR, and MINUTE.

   Enter the time in 24-hour format. For example, enter 2230 for 10:30 P.M.

   If you enter an invalid number, the display does not proceed to the next step. If this happens, re-enter the correct number.

6. When you are finished, press **Start/Enter** to save the setting. The display returns to Standby mode and shows the date and time you have set.

   19-MAR 12:30 FAX (EUROPE Format)

Setting Your Fax Number and Name

Your fax number and name can be printed at the top of each page transmitted.

1. Press **User Tools** on the front panel. The display shows the first setup menu; FAX NUMBER/NAME.

2. Press **Start/Enter** to access the Fax Number/Name menu.
   The display shows 'FAX NUMBER.'

3. Press **Start/Enter**.
   If there is a number already set, the number appears.

   TEL:_

4. Enter the telephone number your machine is connected to. You can enter up to 20 digits.

   Press * for plus sign (+) and # for a hyphen. If you entered a wrong number, press **Search/Delete** to delete it.

5. Press **Start/Enter** when the number on the display is correct.
   If there is a name already set, the name appears.

   NAME:_

6. Enter your name using number keypad. You can enter up to 40 characters.

   For details on how to use the number keypad to enter alphanumeric characters, see page 2.19.

7. Press **Start/Enter** when the name on the display is correct.

chapter 2

Stand-alone Fax

This chapter explains how to send and receive faxes from the front panel of this machine. This chapter also demonstrates how to use the Transmission Option features and change the settings on the fax system.

This chapter provides information on the following topics:

- Setting Up Stand-alone Fax System
- Sending a Fax
- Receiving a Fax
- Making a Copy
- Automatic Dialling
- Transmission Options
- Additional Functions

Setting up Stand-alone Fax System

Setting Volume

Ringer Volume

You can adjust the volume of the ringer to your desired volume.

1. Press ◀ or ▶ in Standby mode.
   The display shows the current ringer volume setting.

   RINGER VOL.[3]

2. Press ◀ or ▶ until you find the desired loudness. Four levels are available; 0~3.

   You will hear the selected volume and the display will show the level. Setting '0' turns the ringer off. The machine will work normally even if the ringer is set to off.

3. Press **Start/Enter** to save the setting.

Speaker Volume

1. Press **On Hook Dial** to adjust the speaker volume. If you cannot hear dial tone, check the phone line connection.

2. Press ◀ or ▶ repeatedly until you find the desired loudness.
   The display shows the current volume level.

   SPEAKER VOL.[2]

3. After choosing the desired volume level, press **On Hook Dial**.

Setting Alert Tones

You can choose an alarm tone to sound when an error occurs (ALARM VOLUME) or when any key is pressed (KEY VOLUME).

1. Press **User Tools** on front panel. The display shows the first setup menu; FAX NUMBER/NAME.

2. Press ◄ or ► until 'VOLUME SETUP' appears, then press **Start/Enter**. The display shows 'ALARM VOLUME'.

3. Press **Start/Enter** to access the Alarm Volume menu. To access the Key Volume menu, press ◄ or ► until 'KEY VOLUME' appears, then press **Start/Enter**.

4. Press ◄ or ► to turn the sound ON or OFF, then press **Start/Enter** to save the setting.

5. To return to Standby mode, press **Stop**.

Setting User-Selectable System Options

Your machine has various user-selectable system options. These options are preset at the factory but you may need to change them. To find out how the options are currently set, print the System Data list. For more information on printing the list, see above.

Setting an Option

1. Press **User Tools** on the front panel. The display shows the first menu; FAX NUMBER/NAME.

2. Press ◄ or ► until 'SYSTEM SETUP' appears. The display shows the first option menu; LANGUAGE.

3. Scroll through the options by pressing ◄ or ► repeatedly.

4. When the option you want appears on the display, press **Start/Enter**.

5. Choose the desired status by pressing ◄ or ► repeatedly, or enter the desired value using the number keypad.

6. When setting is done, press **Start/Enter** to save the setting.

   You can exit from setup mode at any time by pressing **Stop**. The machine returns to Standby mode without saving the setting you have already changed.

Selectable Options

These instructions assume you have followed the steps on page 3.1 under 'Setting an Option' and the machine is prompting you to change one of the options listed here.

- **LANGUAGE** — You can select the display language. The available languages are **ENGLISH**, **GERMAN**, **FRENCH**, **ITALIAN**, **SPANISH**, **PORTUGUESE** and **DUTCH**.

- **SEND FROM MEMORY**—Enables all transmission documents to be automatically scanned into the memory before transmission.

  Select **ON** to enable.
  Select **OFF** to disable.

- **SENDING CONFIRM** — A confirmation report shows whether the last transmission was successful or not, how many pages were sent, etc.

  Select **ERROR** to print only when an error occurs and the transmission was not successful.
  Select **ON** to print a confirmation report automatically each time you send a fax.
  Select **OFF** to turn off.

- **FAX PAPER SIZE** — Select the paper size you will use for recording. **LETTER**, **A4** and **LEGAL** sizes are available.

  Note: If you set the Auto Reduction menu option, or turned Paper Save mode on, your machine will determine the reduction rate according to this setting.

- **AUTO REDUCTION** — When receiving a document as long or longer than the paper loaded in your machine, the machine can reduce the data in the document to fit into your recording paper size.

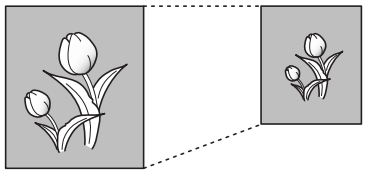

Turn this feature on to reduce an incoming page that may need to be divided into two pages with only a few lines on the second page. If the fax machine cannot reduce the data to fit onto one page with this feature enabled, the data will be divided and printed in actual size on two or more sheets if necessary.

Select **ON** to enable. Note that this feature does not apply to the copy mode.
Select **OFF** to turn this feature off. The overflow data will be printed out on a second page.

- **DISCARD SIZE** — When receiving or copying a document as long as or longer than the paper installed in your machine, you can set the machine to discard any excess image at the bottom of the page to fit onto the recording paper size.

Enter the desired discard size from 0 through 30 mm using the number keypad.

If the received page is outside the margin set, it will be printed on two sheets of paper at the actual size.

If the data is within the margin, and the Auto Reduction feature is on, it will be reduced to fit onto the appropriate size paper (Discard does not take place). If the Auto Reduction feature is turned OFF or fails, the data within the margin will be discarded.

- **RINGS TO ANSWER** —You can select the number of times your machine rings before answering an incoming call. If you are using your machine as both a telephone and a fax machine, we suggest you set the ring count to at least 4 to give you time to answer.

- **STAMP RCV. NAME**—Allows the machine to automatically print the page number, and the date and time of the reception at the bottom of each page of a received document.

  Select **ON** to enable.
  Select **OFF** to disable.

- **RCV. START CODE** — The remote receive start code allows you to initiate fax reception from an extension phone plugged into the EXT. jack on the back of your machine. If you pick up the extension phone and hear fax tones, enter the remote code and the machine will start receiving. The password is preset to '*9*' at the factory.

  Enter the desired code 0 to 9 on the number keypad.

- **ECM MODE** (Error Correction Mode) — This mode compensates for poor line quality and ensures accurate, error-free transmission with another ECM-equipped facsimile machine. If the line quality is poor, transmission time may be increased when the ECM is enabled.

  Select **ON** to enable.
  Select **OFF** to disable.

- **JUNK FAX BARRIER** — With this feature set to ON, the system will only accept a fax sent from the remote station of which the fax number is stored in memory as a one-touch or two-digit speed dial number. This feature is useful for blocking any unwanted fax.

  Select **ON** to turn this feature on. You can receive only from the registered stations.
  Select **OFF** to turn this feature off. Anybody can send you a fax.

Notes:

- This feature needs the number reported by the remote fax to be an exact match to a one-touch or speed dial number in this machine.
  If you have a problem receiving faxes, turn this feature off.

- **DRPD MODE** — "Distinctive Ring" is a telephone company service which enables a user to use a single telephone line to answer several different telephone numbers. The particular number someone uses to call you on is identified by different ringing patterns, which consist of various combinations of long and short ringing sounds. This feature is often used by answering services who answer telephones for many different clients and need to know which number someone is calling in on to properly answer the phone.

  Using the Distinctive Ring Pattern Detection feature, your fax machine can "learn" the ring pattern you designate to be answered by the FAX machine. Unless you change it, this ringing pattern will continue to be recognised and answered as a FAX call, and all other ringing patterns will be forwarded to the extension telephone or answering machine plugged into the EXT. jack.

  You can easily suspend or change Distinctive Ring Pattern Detection at any time.

  Before using the Distinctive Ring Pattern Detection option, Distinctive Ring service must be installed on your telephone line by the telephone company. To setup Distinctive Ring Pattern Detection, you will need another telephone line at your location, or someone available to dial your FAX number from outside.

  Select **ON** to turn this feature on.
  Select **OFF** to turn this feature off.
  Select **SET** to setup or change the Distinctive Ring Pattern Detection. The LCD displays 'WAITING RING'. Call your fax number from another telephone. It is not necessary to place the call from a fax machine. When your machine begins to ring, do not answer the call. The machine requires several rings to learn the pattern.

  When the machine completes learning, the LCD displays 'END DRPD SETUP'.

  With the DRPD feature active, 'DRPD' appears in the display and the previously set reception mode is ignored. If you turn off DRPD, the machine returns to any previously set reception mode.

  Notes:
  - DRPD must be set up again if you re-assign your fax number, or connect the machine to another telephone line.
  - After DRPD has been set up, call your fax number again to verify that the machine answers with a fax tone. Then have a call placed to a different number assigned to that same line to be sure the call is forwarded to the extension telephone or answering machine plugged into the EXT. jack.

Sending a Fax

Preparing Documents for Faxing or Copying

To fax or copy documents that are printed on standard letter or A4 size paper, follow these guidelines.

- Do not attempt to feed the following types of documents into the machine:
  - wrinkled, curled, or folded paper
  - chemically processed paper (pressure-sensitive paper, carbon-coated paper, etc.)
  - coated paper (glossy, etc.)
  - thin paper (onion skin, airmail paper, etc.)
  - thick paper
  - small or short paper (such as a label, voucher, etc.)
  - paper made of cloth or metal

  To feed any of these documents, make copies using a standard copy machine and insert the copies into the document tray.
- Remove all staples and paper clips before feeding the document.
- Ensure any glue, ink, or correction fluid on the paper is completely dry before feeding the document.
- Do not feed documents with pages that are different sizes or different thicknesses.

ACCEPTABLE DOCUMENTS (for ADF[1])

		Single Sheet	2 or More Sheets
Document Size	Max.	8.5 in. (W) x 14 in. (L) (216 mm x 356 mm)	8.5 in. (W) x 11.7 in. (L) (216 mm x 297 mm)
	Min.	5.8 in. (W) x 5.0 in. (L) (148 mm x 128 mm)	
Effective Scanning Width		8.26 in. (210 mm)	
Number of sheets which can be loaded at a time			Up to 20
Thickness of document		0.05 mm ~ 0.07 mm 0.15 mm ~ 0.2 mm	0.075 mm ~ 0. 12 mm
Print Quality		Uncoated on both sides	

[1] ADF stands for Automatic Document Feeder. It allows you to stack original documents, which will be faxed or copied one by one.

Setting Document Resolution and Contrast

We recommend sending documents printed using a typewriter, felt tip pen, black ink, or laserwriter. The paper should be white or very light, and of normal weight – not cardboard. Blue lines on a ruled pad do not fax well.

To send normal documents, there is no need to adjust the resolution and the contrast.

To send documents with unusual contrast characteristics, including photographs, adjust the resolution and contrast.

Resolution

To increase sharpness and clarity, press the **Resolution** button repeatedly after loading a document until you find the desired mode. You can choose between STANDARD, FINE, or SUPER FINE mode.

STANDARD (200X 100 dpi) works well for documents with normal sized characters.

FINE (200 X 200 dpi) is good for documents containing small characters, thin lines, or print from a dot-matrix printer.

SUPER FINE (300 X 300 dpi) works well for documents containing extremely fine details. SUPER FINE works only if the remote machine also has the SUPER FINE features.

Contrast

To compensate for the brightness or darkness of your document, press the **Rcv. Mode/Contrast** button repeatedly after loading a document until you find the desired mode. You can choose between NORMAL, DARKEN, LIGHTEN, or PHOTO.

NORMAL works well for normal documents.

DARKEN works well for light print or faint pencil markings. The light image and text on the document will be darker on the printed page.

LIGHTEN works well for dark print. The dark image and text on the document will be lighter on the printed page.

PHOTO is used when faxing photographs or other documents containing color or shades of gray. When you choose this mode, you should set the resolution to **FINE**.

Loading Documents

1. Load your document **face down** with the top edge first going into the document feeder.

2. Adjust the document guides for the width of the document.

3. Slide the sheet down into the document feeder until it is in the feed area.

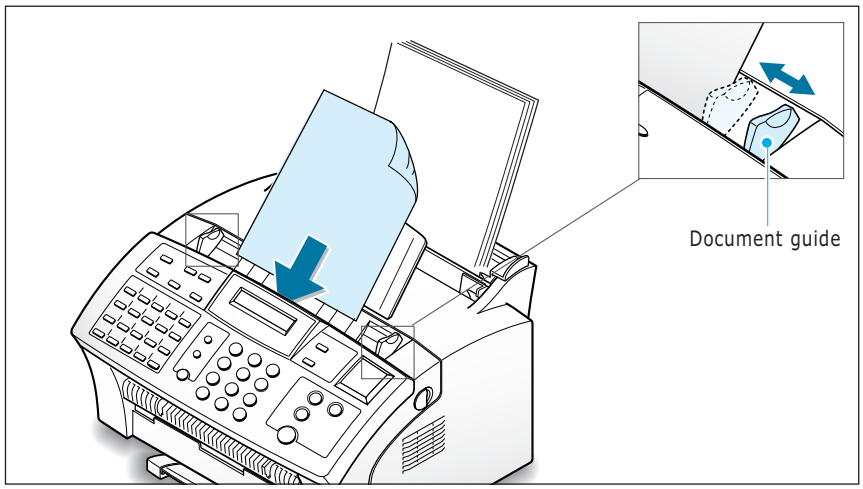

You can insert up to **20 sheets at a time**. If you insert more than one sheet, ensure the bottom sheet enters first. Stagger the leading edge of the document slightly, and insert the document with a slight push to ensure they feed smoothly.

To add pages while the fax is being sent, place them on top of the already loaded sheets.

4. If necessary, use the **Resolution** and **Rcv. Mode/Contrast** buttons to change the resolution and the contrast (see page 2.8).