NOTE: CIRCUIT SHOWN WITH DOOR IS OPENED POSITION.
NOTE: FOR SERVICE REPLACEMENT USE 16 GA 105°C
THERMOPLASTIC COVERED WIRE EXCEPT
FOR HIGH VOLTAGE LEADS OR AS NOTED ON SPECIAL LEADS.

WARNING

POWER MUST BE DISCONNECTED
BEFORE SERVICING THIS APPLIANC

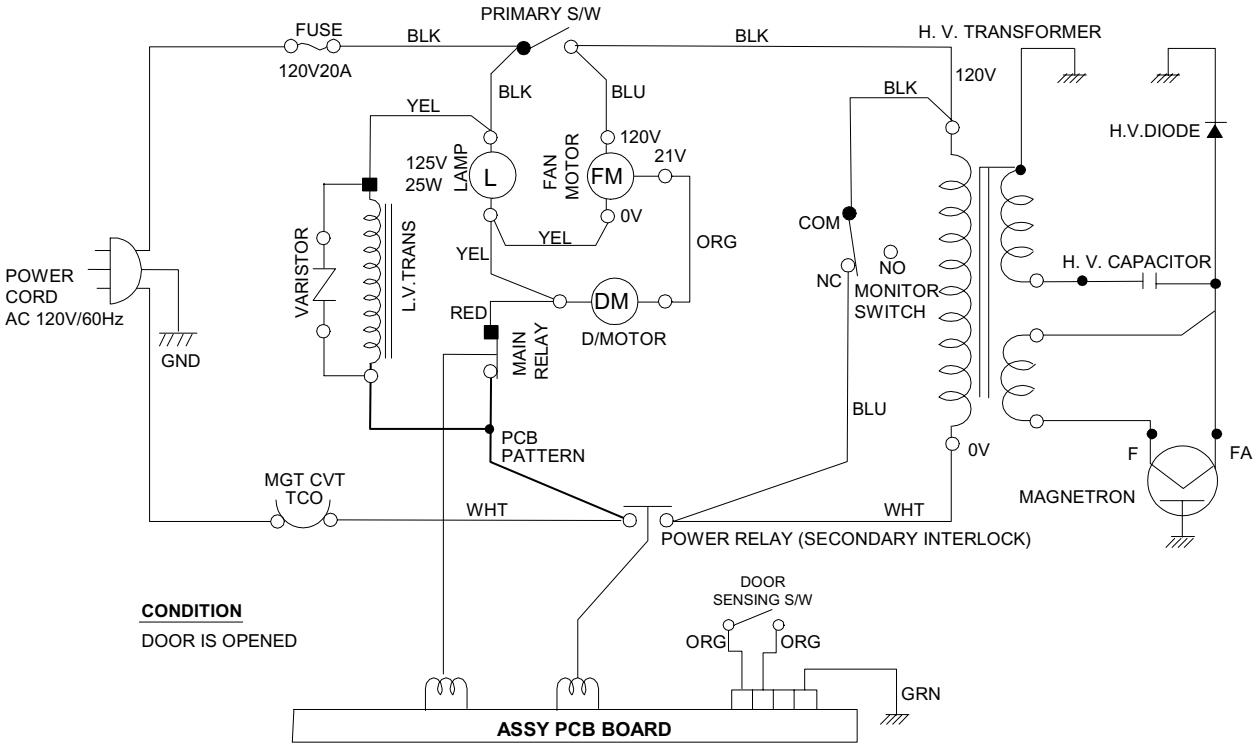

CONDITION

DOOR IS OPENED

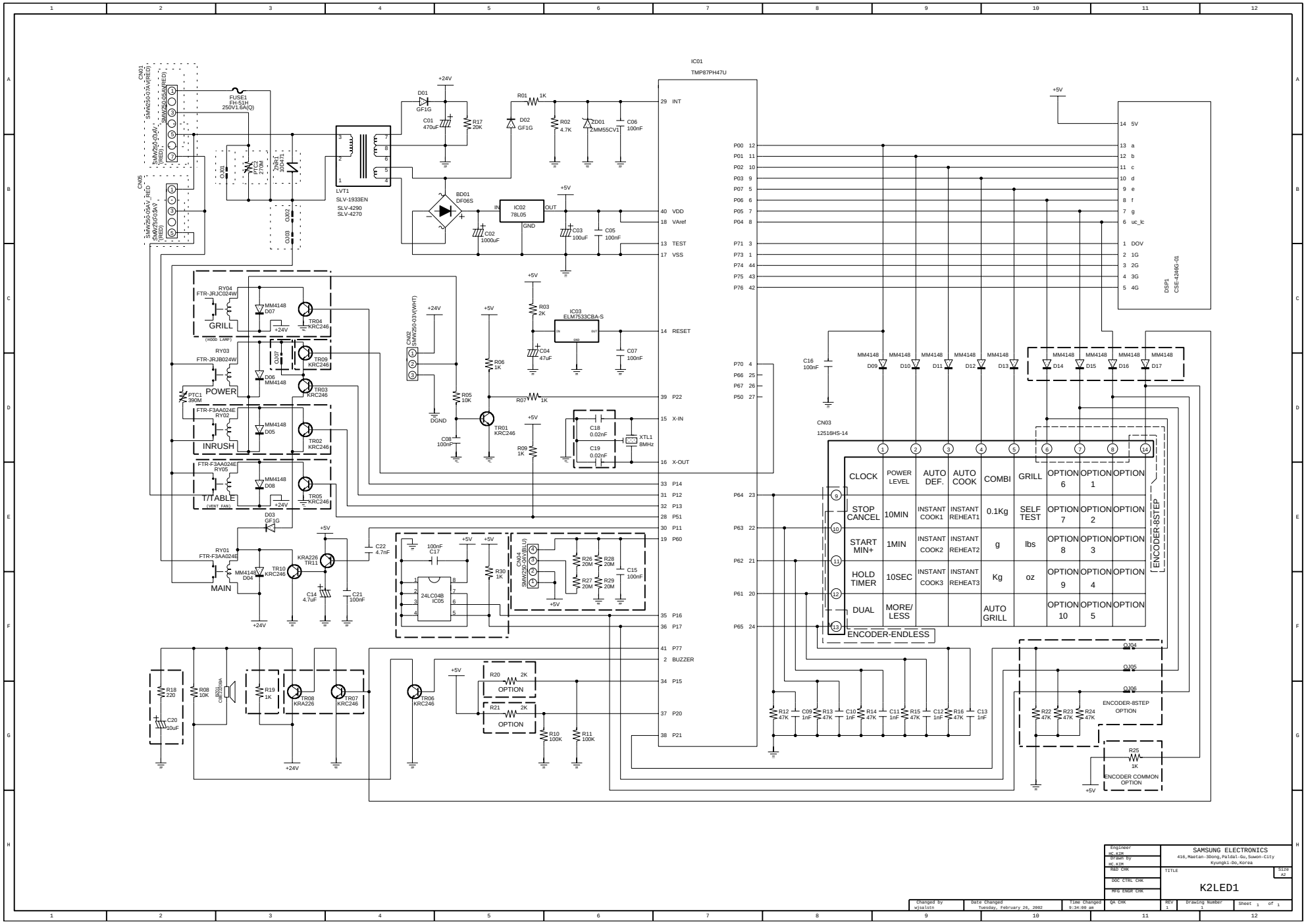
IC01
TMP87PH47U
CN01
SMW250-07A(RED)
SMW250-05A(RED)
SMW250-04A(RED)
CN05
SMW250-05AV_RED
SMW250-03AV (RED)
FUSE1
FH-S1H
250V1.6A(Q)
PTC1
270M
2DM1
2DM1
LVT1
SLV-1933EN
SLV-4290
SLV-4270
D01
GF1G
C01
470uF
R17
20K
R01
1K
D02
GF1G
R02
4.7K
ZD01
2MM55CV1
C06
100nF
BD01
DF06S
IC02
78L05
C02
1000uF
C03
100uF
C05
100nF
GRILL
POWER
INRUSH
T/TABLE
MAIN
RY04
FTR-JRJC024W
RY03
FTR-JRJB024W
RY02
FTR-F3AA024E
RY05
FTR-F3AA024E
RY01
FTR-F3AA024E
MM4148
TR04
KRC246
TR09
KRC246
TR03
KRC246
TR02
KRC246
TR05
KRC246
TR10
KRC246
KRA226
TR11
CN02
SMW250-03V(WHT)
DGND
R05
10K
R06
1K
C08
100nF
TR01
KRC246
R03
2K
IC03
ELM7533CBA-S
C04
47uF
C07
100nF
R07
1K
R09
1K
C18
0.02nF
C19
0.02nF
XTL1
8MHz
C22
4.7nF
C14
4.7uF
C21
100nF
24LC04B
IC05
C17
100nF
R30
1K
CN04
SMW250-03P(BLU)
R26
20M
R27
20M
R28
20M
R29
20M
C15
100nF
R18
220
C20
10uF
R08
10K
BZ01
CEP22Q0A
R19
1K
TR08
KRA226
R07
KRC246
TR06
KRC246
R20
2K
OPTION
R21
2K
OPTION
R10
100K
R11
100K
C16
100nF
CN03
12516HS-14
CLOCK
POWER LEVEL
AUTO DEF.
AUTO COOK
COMBI
GRILL
OPTION 6
OPTION 1
OPTION
STOP CANCEL
10MIN
INSTANT COOK1
INSTANT REHEAT1
0.1Kg
SELF TEST
OPTION 7
OPTION 2
OPTION
START MIN+
1MIN
INSTANT COOK2
INSTANT REHEAT2
g
lbs
OPTION 8
OPTION 3
OPTION
HOLD TIMER
10SEC
INSTANT COOK3
INSTANT REHEAT3
Kg
oz
OPTION 9
OPTION 4
OPTION
DUAL
MORE/ LESS
AUTO GRILL
OPTION 10
OPTION 5
OPTION
ENCODER-ENDLESS
ENCODER-8STEP
DSP1
CSE-424G5-01
R12
47K
C09
1nF
R13
47K
C10
1nF
R14
47K
C11
1nF
R15
47K
C12
1nF
R16
47K
C13
1nF
R22
47K
R23
47K
R24
47K
ENCODER-8STEP OPTION
R25
1K
ENCODER COMMON OPTION
Engineer
HC_KIM
Drawn by
HC_KIM
R&D CHK
DOC CTRL CHK
MFG ENGR CHK
QA CHK
SAMSUNG ELECTRONICS
416,Maetan-3Dong,Paldal-Gu,Suwon-City
Kyungki-Do,Korea
TITLE
K2LED1
Size
A2
Changed by
wjaiaiin
Date Changed
Tuesday, February 26, 2002
Time Changed
9:34:00 am
REV
1
Drawing Number
1
Sheet 1 of 1