NOTICE

© Compaq Computer Corporation

COMPAQ and the Compaq logo Registered in U.S. Patent and Trademark Office.
Microsoft and Windows are trademarks of Microsoft Corporation.

All other product names mentioned herein may be trademarks or registered trademarks of their respective companies.

Compaq shall not be liable for technical or editorial errors or omissions contained herein. The information in this document is subject to change without notice.

The information in this publication is subject to change without notice and is provided "AS IS" WITHOUT WARRANTY OF ANY KIND. THE ENTIRE RISK ARISING OUT OF THE USE OF THIS INFORMATION REMAINS WITH RECIPIENT. IN NO EVENT SHALL COMPAQ BE LIABLE FOR ANY DIRECT, CONSEQUENTIAL, INCIDENTAL, SPECIAL, PUNITIVE OR OTHER DAMAGES WHATSOEVER (INCLUDING WITHOUT LIMITATION, DAMAGES FOR LOSS OF BUSINESS PROFITS, BUSINESS INTERRUPTION OR LOSS OF BUSINESS INFORMATION), EVEN IF COMPAQ HAS BEEN ADVISED OF THE POSSIBILITY OF SUCH DAMAGES. THE FOREGOING SHALL APPLY REGARDLESS OF THE NEGLIGENCE OR OTHER FAULT OF EITHER PARTY AND REGARDLESS OF WHETHER SUCH LIABILITY SOUNDS IN CONTRACT, NEGLIGENCE, TORT, OR ANY OTHER THEORY OF LEGAL LIABILITY, AND NOTWITHSTANDING ANY FAILURE OR ESSENTIAL PURPOSE OF ANY LIMITED REMEDY.

The limited warranties for Compaq products are exclusively set forth in the documentation accompanying such products. Nothing herein should be construed as constituting a further or additional warranty.

Compaq A4000
First Edition

CONTENTS

USING THIS GUIDE 1
Getting the Latest Version 1
Text Conventions in This Guide 1
Special Messages 1

GETTING STARTED 3
Step 1: Unpack the Box 3
Step 2: Choose a Location for theA4000 4
Step 3: Prepare the A4000 for Use 4
Step 4: Set Up the Document Trays 4
Step 5: Connect the AC Power Cord 5
Step 6: Install the Ink Cartridges 5
Step 7: Connect the Telephone Line Cord 6
Step 8: Check Phone Line 6
Step 9: Load Paper 7
Step 10: Connect the USB Printer Cable 7

COMPAQ A4000 SOFTWARE INSTALLATION 9
Description of Programs and Drivers 9
System Requirements 9
Installing the Software 10

COMPAQ A4000 CONTROLS AND FEATURES 11

COMMON PROCEDURES 13
Using the A4000 Monitor Program 13
Changing Default Settings 14
Stand Alone Operation 14
Setting the Date and Time 14
Printing Reports 15
Changing Print Cartridges 16
Aligning Print Cartridges 17
Cleaning Print Cartridges 18
Installing and Using the Photo Cartridge 19
Loading Different Sized Paper 20
Printing on Envelopes 20
Calibrating the Scanner 21
Front Control Panel Setup Button 22

USING THE COMPAQ A4000 SETTINGS UTILITY 23
Accessing the Settings Utility 23
Main Settings Window 23
Print Settings 24
Fax Settings 24
Advanced Fax Settings 25
Speed Send Settings 26
Copy Settings 27
Scan Settings 28
Control Form Settings 29

CONTROL FORM 31
Using the Control Form to Copy 32
Using the Control Form to Scan 32
Using the Control Form to Fax 32

PRINTING 33
Printing a Document 33
Changing the Printer Properties 33
Accessing the Control Program 34

FAXING 37
Preparing Documents for Faxing 37
Loading the Documents 37
Sending a Fax Using the Control Panel 37
Advanced Faxing Features 38
Speed Sending 39
On Hook Dialing (OHD) 39
Confirming Transmission 40
Redial 40
Automatic Redial 40
Receiving a Fax 40
Fax Forwarding 41
Using the Compaq Control Form to Fax 42

COPYING 43
Preparing Documents for Copying 43
Using the Copy/Scan Sleeve 43
Loading the Documents 43
Copying 43
Copying using the Control Form 43
Advanced Copy Features 44

SCANNING 45
Preparing Documents for Scanning 45
Using the Copy/Scan Sleeve 45
Loading the Documents 45
Scanning 45
Scan to Email 45
Scan to Applications 46
Scanning with the Computer 46
Scanning with the Compaq Control Form 46
Advanced Scanning 47

MAINTAINING YOUR A4000 49

ALTERNATE SETUPS 51
Using the A4000 Extension Feature 51
Sharing a Telephone Line with Other Devices 51
DRPD 52
Connecting and Configuring Equipment 52

BASIC TROUBLESHOOTING 55
Clearing Document and Paper Jams 55
Error Messages 56
Correcting Problems 61

REGULATORY AND SAFETY NOTICES 66

INDEX

Using This Guide

Getting the Latest Version

The latest version of this guide is included on the Compaq A4000 CD, and it is installed with your Compaq A4000 software. Please refer to the installed User Guide for the most recent information.

Text Conventions in This Guide

The examples below identify and explain specially formatted text that is used throughout this guide.

- The names of your keyboard keys, A4000 control panel buttons, and certain software instructions appear in a bold type. For example,

  Home, End, Tab, Start, Setup, or **Cancel.**
- Some keys must be pressed at the same time to perform a task. We show this with the key names and the plus (+) symbol; for example, **Ctrl+Home.**
- When we discuss hard drives and diskette drives, we use capital letters to identify the drives; for example, drive A.
- Software is stored in directories on the hard drive. These directories are called folders. We also show them in capital letters, for example, MY FOLDER.
- Sometimes, you will need to type information *and* press the **Enter** key. You will be told to "enter" this information.
- Sometimes, you will need to type information without pressing the **Enter** key. You will be asked to "type" this information.
- Sometimes you will enter a command into a text box. This is similar to older operating systems. We show these commands in lower case and bold type; for example, **install** or **a:\install**.

Special Messages

The following words and symbols have special meaning in this guide:

Text set off in this manner presents specific instructions, commentary, sidelights, or interesting points of information.

CAUTION: Text set off in this matter indicates that failure to follow directions could result in equipment damage or loss of information.

Locating Help

Compaq provides you with several resources to help you learn about your Compaq A4000. A few of these resources are:

Basic Troubleshooting

The Basic Troubleshooting chapter of this guide shows how to fix many common All-In-One related issues.

Index

Look for specific topics in the index at the end of this guide. Look for a topic by name, such as "printer" or, try looking for the action word, such as "printing a file."

Service and Support

If you need further technical support, you can contact Compaq using our Internet site, or by telephoning one of our technical support centers. Our web site is located at:

www.compaq.com

Compaq's Technical Support telephone numbers, by region, are located in the Limited Warranty Statement.

Be sure you know the serial number for your A4000 before you call technical support. The serial number is located on the rear of the machine. Write this number below for future use.

Model and Serial Numbers	
Model Number:	A4000
Serial Number:	_____
Purchase Date:	_____
Store Name:	_____

Getting Additional Help

Application Help

Many software programs or applications have Help files. To access Help for a specific application, you need to be using that program. Click **Help** on the menu bar, or press the **F1** key.

Getting Started

Step 1: Unpack the Box

When unpacking the box containing your Compaq A4000 All-In-One, make sure that all of the items listed below are included. If there are any missing or damaged parts, return the All-In-One in its original packaging to the place of purchase.

Box Contents

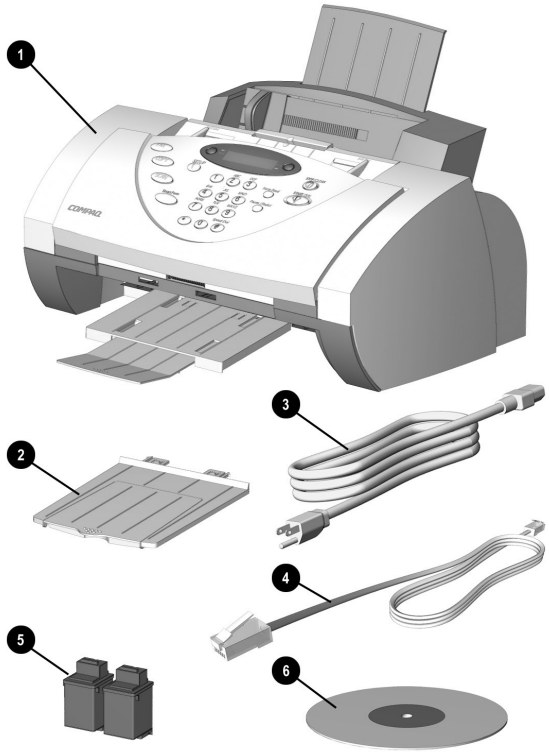

1. One Compaq A4000 All-In-One—use the All-In-One for all of your printing, faxing, copying, and scanning needs.
2. One document exit tray—supports the original document when faxing, copying, or scanning is complete.
3. One AC power (electrical) cord—plugs into the rear of the All-In-One to supply electrical power.
4. The telephone cord—plugs into the A4000 telephone line jack.
5. Two ink cartridges—1 color cartridge and 1 black cartridge.
6. CD-ROM—contains the software drivers and application software required to operate the A4000.

Not Shown:

- One copy/scan sleeve—for faxing, copying, and scanning. Protects photographs to be scanned. Also allows you to scan irregular size paper.
- Documentation—provides the information required to set up, operate, and maintain the A4000. Your documentation also provides important safety information, your Limited Warranty Statement, and troubleshooting tips.

Purchase Separately

Printer cable—The Compaq A4000 uses a standard USB cable (A Plug/B Plug). This cable is not included with your All-In-One and must be purchased separately.

Photo cartridge —The color cartridge that comes with your A4000 will provide excellent near photo-quality color printing. However, an optional photo cartridge is also available for even higher quality results. You may purchase this cartridge separately.

Step 2: Choose a Location for the A4000

To help guarantee trouble-free operation of your A4000, place it on a flat, stable surface. Leave enough space behind and in front of the A4000 to allow for easy paper loading, document removal, and for opening the control panel.

CAUTION: Do not place the A4000 in direct sunlight, near heat sources or air conditioners or in dusty or dirty environments.

Step 3: Prepare the A4000 for Use

When you take the A4000 out of the box, note that it was packaged to protect it during shipping. Before you use the A4000, make certain that you remove all of the following items:

- Tape
- Packing materials

CAUTION: For instructions on removing the packing material, see the Compaq A4000 All-In-One setup poster.

Step 4: Set Up the Document Trays

The A4000 uses several trays to support your paper documents.

Document Exit Tray

To install the document exit tray:

1. Align the latches on the tray with the slots on the front of the All-In-One.
2. Slide the tray latches into the appropriate slots until the latches lock into place.

Installing the document exit tray

Extend the Document Trays

The A4000 ships with the document input/exit tray already installed.

To support documents before and after printing, faxing, copying or scanning, remove the packing tape and extend all of the trays by pulling up and unfolding the extensions.

The A4000 appears as illustrated:

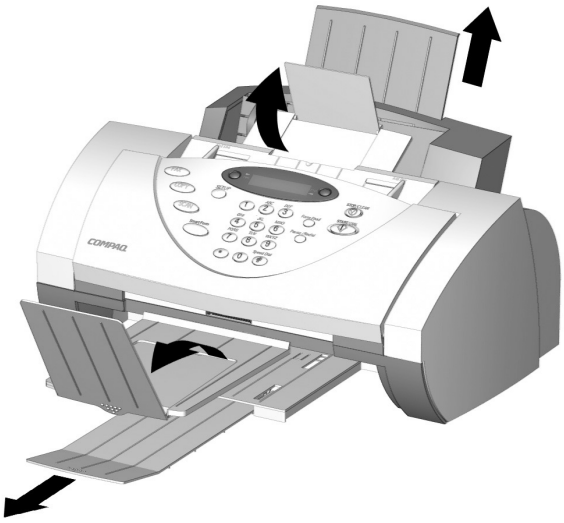

Extending the paper trays

Step 5: Connect the AC Power Cord

This section shows you how to connect the A4000 to the electrical outlet using the AC power cord.

1. Connect one end of the AC power cord into the back of the A4000.
2. Connect the other end into a standard AC power outlet (110V-240V~, 60Hz).

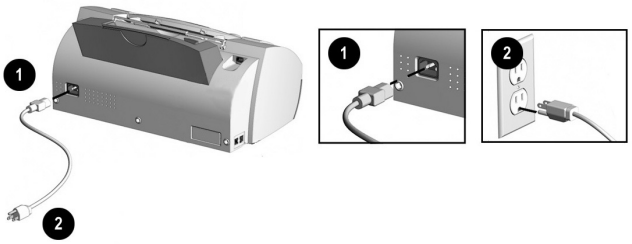

Connecting the AC Power Cord

CAUTION: Make certain that you plug the cord into a grounded (three-prong) wall outlet. Using an outlet that is not grounded may damage the A4000.

After you have plugged in the A4000, the date and time may be blinking on the display. Your PC sets and maintains the date and time for you. However, if you are using the A4000 as a standalone machine, see "Setting Date and Time" in the *Common Procedures* chapter.

Compaq recommends that you leave the A4000 on at all times. The A4000 goes into an energy saving mode when not in use. However, if you want to turn off the A4000, unplug the power cord.

Step 6: Install the Ink Cartridges

1. Lift the control panel by grabbing the panel along the top edge.
2. Pull the control panel forward.

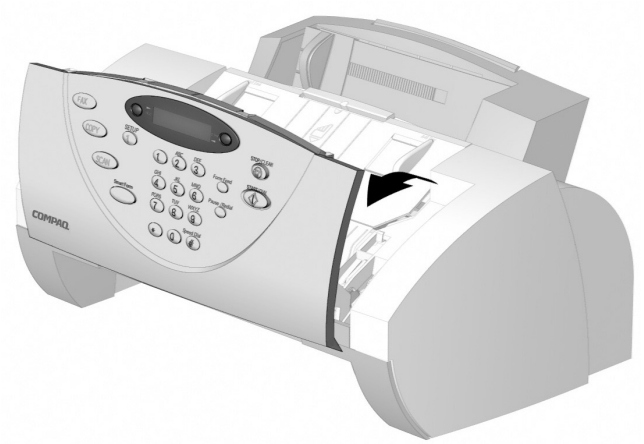

Lifting the control panel

3. Lift the ink cartridge access door. For better access, stow the document input tray away. The cartridge carriage will move to the center.

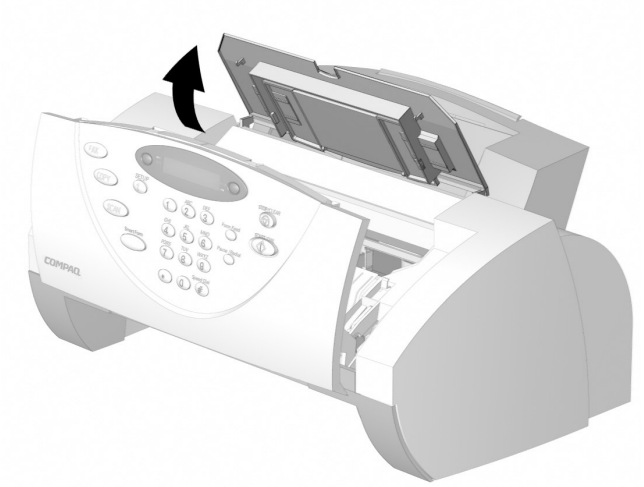

Lifting the ink cartridge access door

4. Remove the new ink cartridge from its packaging. Hold the ink cartridge by the black areas or colored top only.
5. Remove the tape covering the print head by carefully pulling on the yellow tab. Be sure to remove all of the tape.

CAUTION: Do not touch the gold contact area of the print cartridge.

6. Insert the bottom of the black ink cartridge into the right carriage slot. Press back until the cartridge snaps firmly into place.

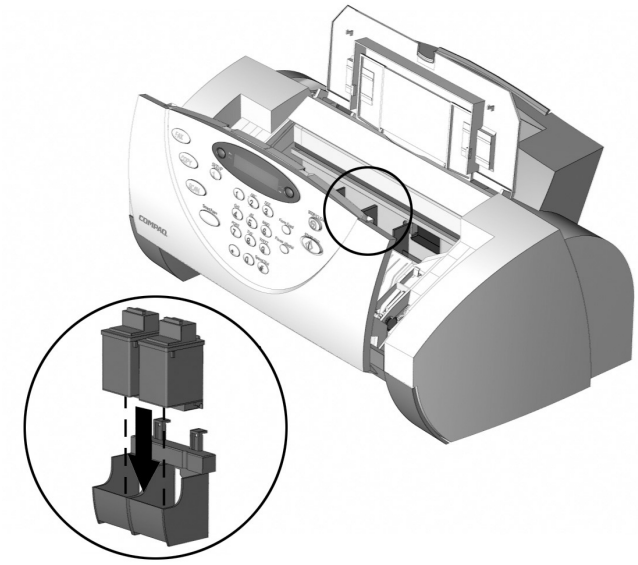

Installing the printer cartridge

7. Insert the bottom of the color ink cartridge into the left carriage slot. Press back until the cartridge locks firmly into place.

If the ink cartridges move loosely in the carriage, they are not locked into place. They are also color coded to help with their installation..

8. Close the ink cartridge access door and the control panel. Press firmly at the top center of the control panel until it snaps closed. The following message displays on the LCD panel:

```
CARTRIDGE?
        NEW BOTH
```

9. Press **Start**.

   An Cartridge Alignment page will print. Once it has finished printing, you will be prompted to enter values to properly align your cartridges. This is necessary for optimal print quality. See “Aligning Print Cartridges” in the *Common Procedures* chapter of this guide for instructions on entering the alignment values.

Step 7: Connect the Telephone Line Cord

This section shows you how to connect the telephone line cord to the A4000. You may also choose to add an extension telephone, answering machine or computer modem. If you have a single telephone line, this allows you to use your telephone when you are not faxing.

For more information on connecting an extension telephone or other optional equipment to the A4000, see the “Alternate Setup” section.

To connect the telephone line cord:

1. Plug one end of the telephone line cord into the socket marked LINE on the left side of the A4000.
2. Plug the telephone line cord into a standard telephone wall jack.

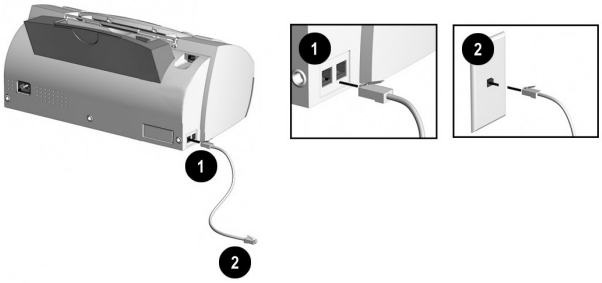

Connecting the Telephone Line Cord

Step 8: Check Phone Line

If you have connected the telephone line, press **Start**. You should hear a dial tone. If you hear a dial tone, you are properly connected. Press **Stop** to hang up.

If you do not hear a dial tone, verify that the telephone line cord is connected securely into the wall and into the socket of the A4000 marked LINE.

Step 9: Load Paper

You can load up to 100 sheets of plain paper into the paper input tray.

To load paper into the A4000:

1. Insert the paper into the paper input tray. Make certain the side you want to print on is facing you. Orient the head of the paper so that the head is facing down.
2. Align the paper with the paper guide. Squeeze the left paper guide and move it to the right to match the width of the paper.

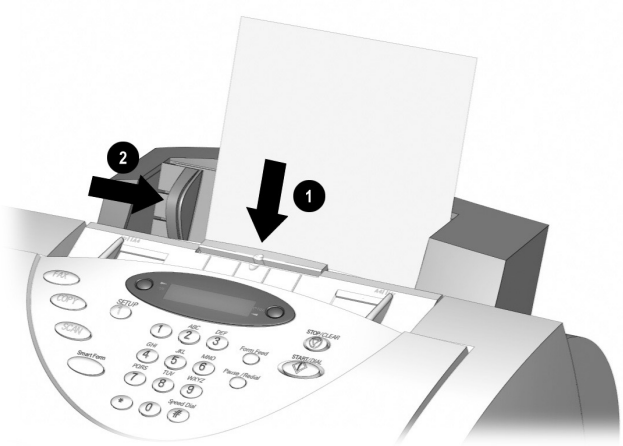

Inserting paper into the A4000

The A4000 emits warning beeps or tones when the paper tray is empty due to one of the following reasons:

- The paper does not load when starting to print a job.
- The printer runs out of paper while printing.

The LCD panel will then display the following message:

```
ADD PAPER THEN
 PRESS FORM FEED
```

To start or continue the print job, install more paper into the paper input tray then press the **Form Feed** button.

IMPORTANT: If you load any paper other than 8 ½" by 11"-sized paper into the paper input tray, you must change the default paper size. Change the default paper size in the printer software and on the A4000 before printing on that paper. See the "Loading Different Sized Paper" section of the *Common Procedures* chapter for instructions. The software must be installed before the paper size may be set in the printer software.

Step 10: Connect the USB Printer Cable

IMPORTANT: The printer cable is not included with your unit. You must purchase a USB cable separately.

To connect the USB printer cable:

1. Connect one end of the USB printer cable to the printer port on the rear of the A4000.
2. Connect the other end of the USB printer cable to the USB printer port on the front or rear of your computer.

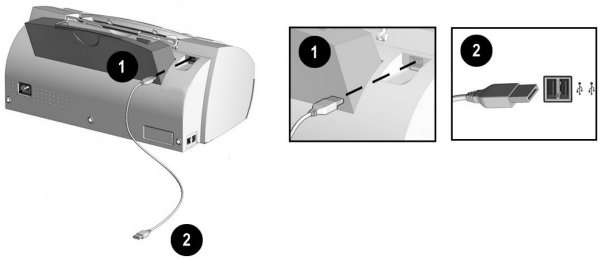

Connecting the USB Printer Cable

IMPORTANT: If your computer is on when you connect the USB cable, Windows will detect the Compaq A4000 and will ask you for the driver disk. Select the **Cancel** button on the dialog that appears.

You are now ready to start the software installation. Proceed to the *Compaq A4000 Software Installation* chapter that follows.

Compaq A4000 Software Installation

Although your Compaq A4000 can be used as a stand alone copier and fax machine, you will get the greatest benefit from your A4000 by connecting it to your computer and installing the included software.

Installing the software will allow you to:

- Print from your computer
- Scan images to your computer
- Send images and faxes through email
- Adjust the Compaq A4000 settings
- Use the innovative Compaq Control Form
- Upload image albums to the internet
- Scan documents for word processing
- And more!

Description of Programs and Drivers

The software is located on the A4000 Drivers CD. The A4000 Drivers CD includes the following software:

Printer Driver

The printer driver tells the computer what kind of a printer you are using and controls the various settings, such as print quality and paper type. You define these settings within the printer driver, which then communicates the settings to both the computer and the printer.

Scanner Driver

The scanner driver allows you to scan images from any graphics or OCR (Optical Character Recognition) applications program that supports the TWAIN standard; for example, *Kodak Imaging, Microsoft Paint, etc*.

Compaq A4000 Utilities

The Compaq A4000 software allows you to control how you want to use your Compaq A4000 to print, fax, copy, and scan.

With the utility software, you can change your Compaq A4000 settings, set your scanning applications, enter your Speed Send lists, and send faxes to email recipients.

You can also use the Compaq Control Form to automate common scanning, copying, and faxing tasks.

Media Browser

Use Media Browser to manage your images. Create image albums, enhance your images, and post your albums to the internet.

ReadIRIS (OCR)

With ReadIRIS, you can scan documents and convert them to text. Load the text files into your favorite word processor for editing.

System Requirements

Before you start, make sure you have the minimum computer setup:

- 486 processor (recommend Pentium 100 or better for optimum performance).
- Microsoft Windows 98 Second Edition, Windows Millennium, or Windows 2000.
- 32 MB RAM (64 MB RAM or more for optimum performance, and 128 MB or more for scanning large images).
- 40 MB available hard drive space (100 MB for a full installation).
- Additional minimum of 100 MB free hard drive space recommended for full-color scanning.
- CD-ROM drive required for software installation.

IMPORTANT: The Compaq Limited Warranty excludes the use of the A4000 outside of the country of purchase. See your Limited Warranty Statement for more details.

Installing the Software

Before you start, make sure your computer meets or exceeds the system requirements for the drivers and application programs you want to install. See “System Requirements” listed above.

To install the Compaq A4000 software

1. Turn on your computer and let it complete its start up into Windows.
2. Plug in the A4000 power cable, then connect the USB cable to the PC.
3. Windows then detects new hardware.

IMPORTANT: For proper software installation, you MUST cancel the Add New Hardware wizard!

Windows detects that you have installed the Compaq A4000 and asks you for the Driver disk. Select the **Cancel** button on the above dialog. If you are starting Windows for the first time, Windows asks you to select a printer. Again, select **Cancel.**

4. Put the CD in the CD-ROM drive. The installation will start after a short period of time.

   If the CD does not run automatically, you will need to start it yourself:

   - Click **Start→Run**.
   - Type **x:\setup.exe** (where **x** is the drive letter for your CD-ROM drive)
   - Click **OK**.

5. When the A4000 setup screen appears, follow the on-screen instructions to complete the software installation.

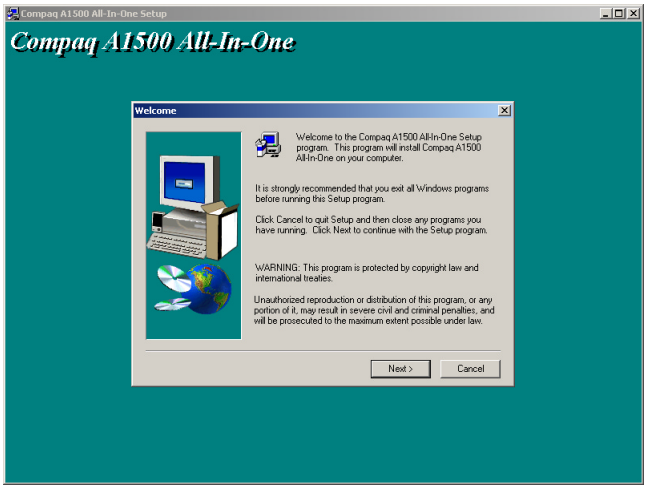

Compaq A4000 Controls and Features

Control Locations and Functions

Take a moment to become familiar with the main components of your A4000.

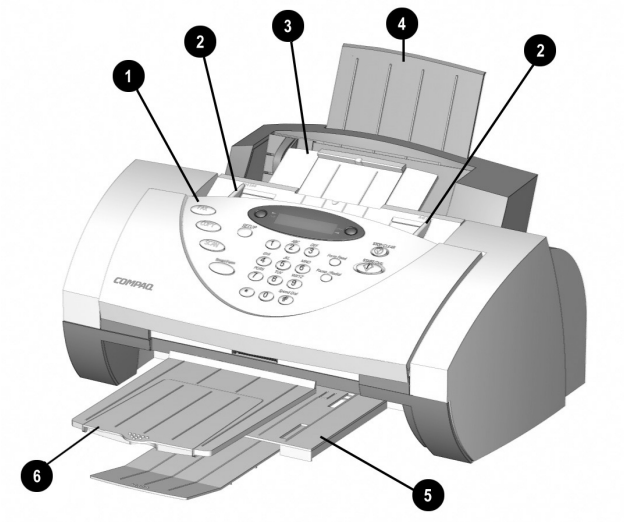

Front view of the A4000

Controls		
1	Control Panel	Accesses the functions of the A4000.
2	Document Input Guides	Aligns original document for faxing, copying, or scanning.
3	Document Input Tray	Supports documents for faxing, copying, or scanning.
4	Paper Input Tray Extension	Supports paper.
5	Paper Exit Tray	Holds printed pages.
6	Document Exit Tray	Holds original documents that have been fed through the A4000 scanner.

Control Panel

The control panel is located on the front of the A4000.

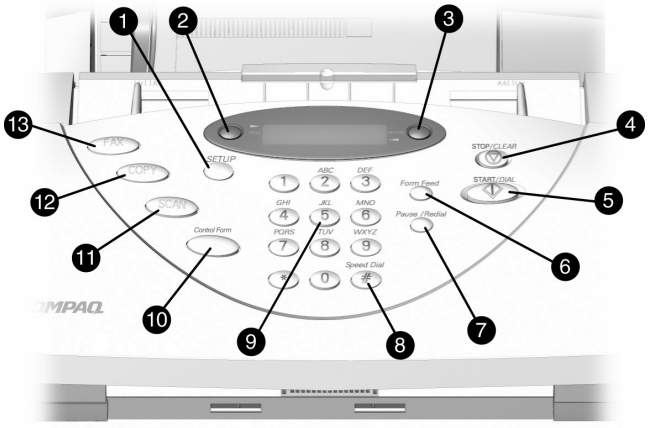

Control Panel Features		
1	Setup	Provides menus to access the system setup, cartridge maintenance, and print report features.
2	Menu	Displays features for each operation.
3	Options	Changes the settings for that feature when pressed after the menu button.
4	Stop/Clear	Halts an action or clears an incorrect value. When multiple jobs are running, use the **Option** button to select a job. Press **Stop** to stop it or **Start** to let the job continue.
5	Start/Dial	Begin a selected action, such as faxing. Press this button first for On Hook Dialing (OHD).
6	Form Feed	Use to continue printing after reloading the paper tray when it runs out of paper during a print job. Also removes paper if paper does not exit completely after printing.
7	Pause/ Redial	Adds a three-second pause when dialing or dials the last number called.
8	#/ Speed Send	Enters the "#" symbol when dialing. If pressed when system is in the idle state, this button provides access to the Speed Send menu (Send to Fax or Email.)
9	Keypad	Dials a number or selects a value for printing copies.
10	Compaq Control Form	Prints out the Compaq Control Form or starts a task using this form.
11	Scan	Creates electronic files on your host computer from hardcopy documents.
12	Copy	Copies a document.
13	Fax	Use to fax a document.

Rear View

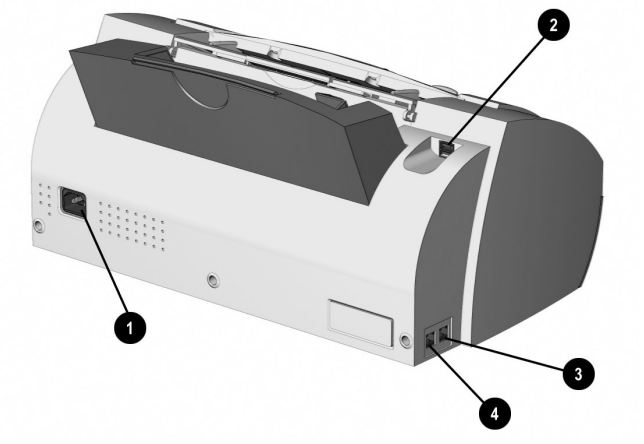

Rear View Features	
1	AC power cord connector.
2	USB port (top right).
3	Extension (EXT) Line to telephone or answering machine.
4	Telephone (LINE) to wall jack.

Common Procedures

This section describes several common procedures that you will need to operate your Compaq A4000. These procedures include:

- Using the A4000 Monitor Program
- Using the A4000 Settings Utility to set up Print, Fax, Copy and Scan operations including Speed Send and Control Form
- Changing Default Settings
- Setting the date and time
- Printing reports
- Changing, aligning, and cleaning print cartridges
- Installing and using the photo cartridge
- Loading different sized paper
- Printing on envelopes
- Calibrating the scanner
- Using the SETUP button on the control panel

Using the A4000 Monitor Program

The A4000 can only get assistance from the PC to run PC assisted tasks when the A4000 Monitor Program is running.

The following A4000 tasks require PC assistance:

- Speed Send operations that include email addresses and destinations
- All scan operations
- Control Form jobs

For more details on using these procedures, go to the appropriate chapter in this guide; for example, *Faxing*, *Copying* or *Scanning*.

It is not necessary to have the A4000 Monitor Program running for any Print, Copy, or Scan operations initiated from your PC.

Once the printer is powered and connected to the PC by the USB cable and the software is installed, the A4000 monitor program will start running when the system is powered up. When the A4000 Monitor Program is running, the following icon will appear in the system tray.

If a PC assisted task is in progress, the icon is animated.

While your cursor is over the icon, click the left mouse button to bring up the A4000 Settings utility. For more details on using the utility, see “Compaq A4000 Settings Utility” later in this chapter.

Right click on the icon to display the Monitor menu. From the menu, you can access the Settings Utility, the Printer Control Program, or the Printer Properties. You can also choose to shut down the A4000 Monitor Program. This is useful if you want to disable the A4000 from using the host PC.

If the A4000 is not connected or there is a communication problem, a red ‘**X**’ will appear on the above icon.

Changing Default Settings

The computer-based Compaq A4000 Settings Utility provides a simple user interface to change and set up the following features of the A4000:

- Print
- Fax
- Copy
- Scan
- Speed Send
- Compaq Control Form

To access the A4000 Settings Utility, use either of the following methods:

- Click **Start→Programs→Compaq A4000 All-In-One→Compaq A4000 Settings Utility.**

  -or-

- Left click on the A4000 Monitor Program icon located in the system tray.

For more details on the default settings, see the "Compaq A4000 Settings Utility" section later in this chapter.

Stand Alone Operation

When the A4000 is not connected to a computer, or the computer is not on, the A4000 can perform the following tasks:

- Send and receive faxes.
- Make black and white or color copies
- Support the following setup functions:
  - Change, clean and align the cartridges
  - Print reports
  - Change the receive mode
  - Select paper size and fax receive print quality

For more details on using these procedures, go to the appropriate chapter in this guide; for example, *Faxing*, *Copying*, *Scanning* and "Control Panel Setup Button."

If you attempt a task that requires the PC while the PC is not available, the A4000 will display a "PC not available" message.

Setting the Date and Time

A blinking date and time in the LCD panel will indicate that there has been a power failure and the time may have lost accuracy. If the power is off for more than an hour, the correct date and time will be lost.

When the PC is connected it can automatically detect this condition and reset the date and time when power is restored.

The date and time can be set from the computer using the Compaq A4000 Settings Utility or from the A4000 control panel.

Setting the Date and Time using the Settings Utility

To change the date and time from the computer:

1. Run the Compaq A4000 Settings Utility by clicking on the A4000 Monitor icon.
2. Select the **Fax** button.
3. Select the **Advanced** button.
4. Select the check box to "Get date and time from the computer." Alternately, if this box is not checked, you can enter the date and time.
5. Close the Settings Utility to update the time on the A4000 display.

Setting the Date and Time using the A4000

You can set the date and time from the A4000 control panel when the A4000 is used in standalone mode, using the following steps:

1. Press the **Setup** button. Date and time is the first menu item in the **Setup** menu.
2. Enter two digits for the month. For example, enter 01 for January. Note that as you enter valid information, the top line displays the updated date and time.
3. Enter two digits for the day. For example, enter 07 for the 7th.
4. Enter two digits for the year. For example, enter 00 for 2000, or 01 for 2001.
5. Enter two digits for the hour. For example, enter 02 for 2 PM.
6. Enter two digits for the minute. For example, enter 45.
7. Enter 1 for AM or 2 for PM.

You can also use the **Options** button on the A4000 to step through or skip over the current settings. If you only want to change the hour, press the **Options** button until the hour is displayed and then enter the new hour. Pressing **Stop** at any time uses the last valid date and time entered.

Printing Reports

Transmission Report Default Settings

When you send a fax from the A4000, you can choose to:

- Print a report if there is an error sending the fax (this is the default setting)
- Always print a confirmation report
- Never print a confirmation report

To make your selection, use the Message Confirm pull-down box in the **Fax** section of the Compaq A4000 Settings Utility.

Fax Confirmation Report

From the control panel you can print out a confirmation report for the last fax sent.

1. Press **Setup**
2. Press the **Menu** button once. The LCD panel displays the following message:

```
PRINT REPORT
     FAX CONFIRM
```

3. Press **Start** to print the report.

Transmission and Reception Logs

Logs for faxes received or sent by the A4000 are stored in the A4000 and can be printed out on request or automatically every 40 transactions. Note that only the last 40 transactions are kept. To print a report, use the following procedure:

1. Press **Setup.**
2. Press the **Menu** button until Print Report displays in the top line of the LCD panel.
3. Press the **Options** button to select the log you want to print.

```
PRINT REPORT
     RECEIVE LOG
```

4. Press the **Start** button to print the report.

Fax logs will be printed automatically if the "Automatically print fax logs" box is checked in the **Advanced Fax Settings** section of the A4000 Settings Utility.

Speed Send List

The Speed Send List contains all of the current Speed Send names with their fax numbers and/or email addresses.

To print the Speed Send List report, use the following procedure:

1. Press **Setup**
2. Press the **Menu** button until Print Report is displayed in the top of the display
3. Press the **Options** button to select Speed Send List
4. Press **Start** to print the report

To access or edit the Speed Send List, use the A4000 Settings Utility. For more information, see the "Speed Send" and "Control Form Setup" sections in this chapter.

Self Test

The Self Test Report prints a nozzle test pattern along with some service information that may be required during a service call.

To print the Self Test report, use the following procedure:

1. Press **Setup**
2. Press the **Menu** button until Print Report is displayed in the top of the display
3. Press the **Options** button to select Self Test
4. Press **Start** to print the report

Changing Print Cartridges

CAUTION: When changing cartridges, avoid touching the motor located in the front right corner load area, as it can be hot.

The system can keep track of the ink level in each of the three cartridge types: black, color, and photo. When you tell the system that a new cartridge has been installed, the ink level for that cartridge type is set back to full.

If you tell the system that you are installing an old cartridge, the ink level for that cartridge type is not reset. This allows exchanging the black and photo cartridge as required while maintaining the ink level for both. You can also use the old selection when you take a cartridge out for cleaning. For more information, see the "Cleaning Print Cartridges" section in this chapter.

Changing Print Cartridges using your Computer

1. Access the Compaq A4000 Printer Control Program by right-clicking the A4000 Monitor icon in your system tray, or by clicking **Start→Program→Compaq A4000 All-In-One→Compaq A4000 Control Program.**
2. Select the **Cartridges** tab.
3. Click the **Install/Change Cartridges** button.
4. Lift the control panel by pulling toward you on the edge nearest the LCD display.
5. Lift the cartridge access door.
6. Replace/install the selected cartridge.
7. Close the cartridge access door.
8. Close the control panel. Press firmly on the top center of the control panel until it snaps into place.
9. Click the button that indicates which cartridge is being installed. If it is a new cartridge, be sure to verify that the correct type is selected: standard or high yield.
10. Installing new cartridges requires an alignment check and an alignment pattern will automatically print. Go to step 4 of "Aligning Print Cartridges from the Computer" in this chapter.
11. When re-installing old cartridges, the alignment procedure is optional.

Changing Print Cartridges using the A4000

1. Lift the front control panel by pulling toward you on the edge nearest the LCD display.
2. Lift the cartridge access door. Replace/install the selected cartridge. Install the color cartridge in the left position, and the black or photo cartridge in the right position.
3. Close the cartridge access door and the control panel. Press firmly on the top center of the control panel until it snaps into place. The LCD panel displays the following message:

```
CARTRIDGE?
    NONE CHANGED
```

4. Press **Start** if you did not change any cartridges. If you changed a cartridge, press the **Options** button until the correct answer displays on the LCD panel. Press **Start**.

```
CARTRIDGE?
       OLD RIGHT
```

```
CARTRIDGE?
       NEW RIGHT
```

```
CARTRIDGE?
        NEW LEFT
```

```
CARTRIDGE?
        NEW BOTH
```

5. If you select New Left or New Both cartridges in Step 4, press the **Options** button until the correct answer displays on the LCD panel. Press **Start**.

```
LEFT CARTRIDGE?
       STD COLOR
```

```
LEFT CARTRIDGE?
HIGH YIELD COLOR
```

6. If you select New Right or New Both cartridges in Step 4, press the **Options** button until the correct answer displays on the LCD panel. Press **Start**.

```
RIGHT CARTRIDGE?
       STD BLACK
```

```
RIGHT CARTRIDGE?
HIGH YIELD BLACK
```

```
RIGHT CARTRIDGE?
          PHOTO
```

7. If you select Old Right cartridges in Step 4, press the **Options** button until the correct answer displays on the LCD panel. Press **Start**.

```
RIGHT CARTRIDGE?
      OLD BLACK
```

```
RIGHT CARTRIDGE?
      OLD PHOTO
```

8. If any new cartridges were installed, then an alignment is required. An alignment pattern automatically prints. Go to step 6 of "Aligning Print Cartridges" in the next section below.

Aligning Print Cartridges

Cartridge alignment can be done from the computer by using the Compaq A4000 Printer Control Program, or from the A4000 front control panel.

The print cartridges should be aligned after installing a new print cartridge or if the black portions of graphics do not align with the color portions. The alignment pattern automatically prints after installing a new cartridge.

Aligning Print Cartridges using the Computer

To print the alignment pattern:

1. Access the Compaq A4000 Printer Control Program by right clicking on the A4000 Monitor icon, or by clicking **Start→Programs→Compaq A4000 All-In-One→Compaq A4000 Control Program**.
2. Click the **Cartridges** tab on the A4000 Printer Control Program.
3. Click the **Align Cartridges** button. The alignment test page will print and the "Ink Cartridge Alignment" dialog box will appear on your screen.
4. Enter the alignment information.
5. Depending on the cartridge combination you have installed on your printer, the A4000 prints a test page with two or more alignment patterns similar to those shown below. Each pattern has a number under it. Your pattern may have more letters than those shown below.

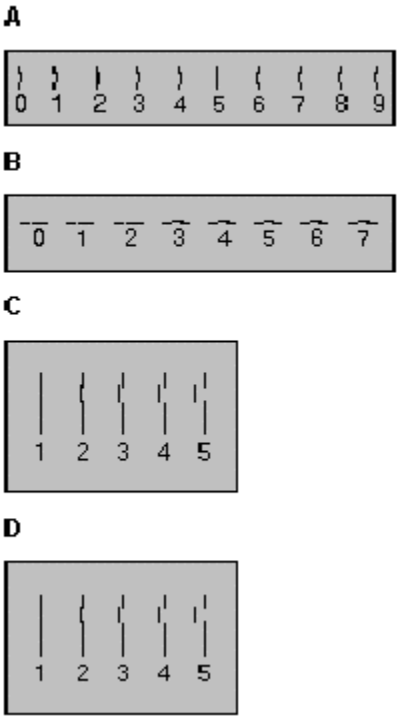

6. Locate the number under the alignment pattern that comes closest to forming a perfectly straight line from each group on the test page. For example, in sample group **A** above, pattern 5 comes closest to forming a straight line.
7. Enter the number you chose as the appropriate alignment setting for each group in the dialog box. Use the **Up** and **Down** arrow keys.
8. Click **OK** after you have entered a number for each of the groups.

Aligning Print Cartridges using the A4000

To print the alignment pattern:

1. Press **Setup**.
2. Press the **Menu** button until the following message appears on the LCD panel:

```
MAINTENANCE?
 CARTRIDGE ALIGN
```

3. Press **Start.** The Cartridge Alignment page prints.
4. Enter the Cartridge Alignment information. Depending on the cartridge combination you have installed in your printer, a test page with one or more alignment patterns similar to the ones shown

below is printed. Each pattern has a number under it.

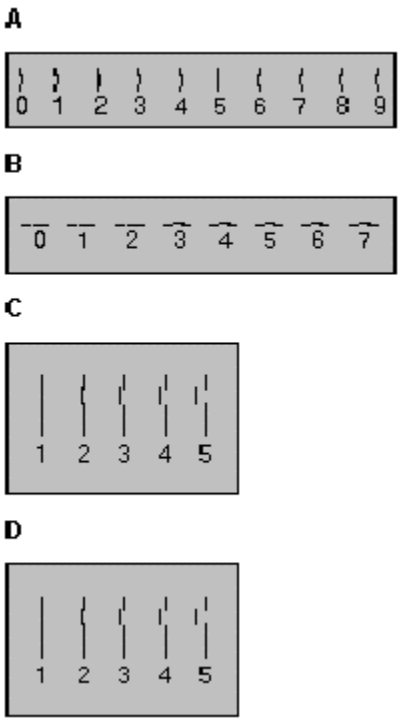

5. Locate the number under the alignment pattern that comes closest to forming a perfectly straight line from each group on the test page. For example, in sample group **A**, pattern 5 comes closest to forming a straight line.
6. Enter the 2-digit number on the keypad using a leading 0 for the "A" alignment pattern, if necessary. In this example, press the **0** and **5** buttons. The LCD panel displays the following message:

7. Re-enter the alignment value if an out of range two-digit number was entered.

If the displayed value is correct, press the **Options** button to proceed to the next pattern. Use the **Clear** button if you make a mistake and need to back up.

8. Repeat steps 6 through 8 for the remaining printed out patterns. Note that the number of patterns printed depends on the cartridge types installed.

Cleaning Print Cartridges

There are approximately 200 nozzles on each of the cartridges. Depending on the cartridge type, the nozzles are all one color (black) or split into 3 groups of different colors (color or photo).

Cleaning the ink jet nozzles on the print cartridges improves the print quality.

There are several situations that can result in some of the nozzles not working properly.

- If the cartridge is new, it may take a couple of cleaning cycles to get all of the nozzles working.
- If the printer has not been used for an extended period of time, the cartridges may not function properly.
- A build up of ink on the bottom of the cartridge may affect the cartridge performance.
- If the cartridge is running out of ink, the cartridge will not function properly. In this case, cleaning the cartridge will not help the nozzles to fire. You must replace the ink cartridge.

There are two methods to clean the ink cartridges:

- Clean and nozzle test, which can be done from the A4000 control panel or the computer.
- Wiping the print cartridge nozzles.

Cleaning the Cartridges using the Computer

1. Access the Compaq A4000 Printer Control Program by right clicking on the A4000 Monitor icon, or by clicking **Start→Programs→Compaq A4000 All-In-One→Compaq A4000 Control Program.**
2. Click the **Cartridge** tab, then click on the **Clean Print Nozzles** button. The cleaning pattern prints.

Cleaning the Cartridges using the A4000

1. Press **Setup**.
2. Press the **Menu** button until the following message appears on the LCD panel:

3. Press **Start.**

Checking the Cartridge Cleaning Printout

1. Examine the test pattern.

   The example below shows a test pattern of all nozzles functioning correctly. The first pattern printed in each group is from the black (or photo) cartridge. The second one is from the color cartridge.

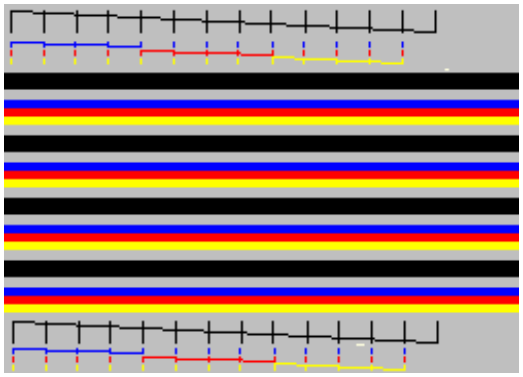

2. Compare the diagonal line above the printed bars to the diagonal line below the printed bars.

   Look for a break in the diagonal lines. A broken line indicates clogged nozzles.

   If the bottom line still has breaks, but fewer than the top line, run the test two more times. If the print quality is satisfactory after running the test three times, the print nozzles are clean. You do not need to complete the remaining steps.

   If the print quality of both lines is not satisfactory after running the test three times, perform the following steps:

   a. Remove and reinstall the print cartridge. For more information, see the "Changing Print Cartridges" section in this chapter.

   b. Repeat the nozzle test.

   c. Wipe the print cartridge nozzles if the lines are still broken.

Wiping the Print Nozzles

Wipe the print nozzles only if you have already cleaned the print nozzles but the print quality is still not satisfactory.

Wiping the print nozzles removes dried ink from the nozzles. To wipe the print nozzles:

1. Remove the print cartridge from the printer.
2. Use a dry tissue to gently clean the entire copper colored area including the nozzles and contacts.

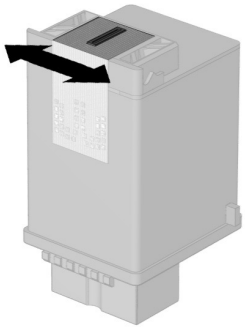

Cleaning the print cartridges

When cleaning the color print cartridge, wipe the nozzles in one direction so the colors do not mix.

To dissolve dried ink, hold a damp cloth against the nozzles for about three seconds. Gently blot and wipe dry.

1. Allow the copper-colored area to dry.
2. Reinstall the print cartridge and repeat the nozzle test.

Be sure that you select **Old** when re-installing the cartridge. This will ensure the current ink count remains accurate.

3. Remove the cartridge if the nozzle test line is still broken. Wipe the print cartridge carrier contacts with a tissue or soft cloth.

Installing and Using the Photo Cartridge

The optional photo cartridge gives excellent, near photo quality printing when used in conjunction with specialty coated or photo papers.

When you wish to use a photo cartridge, replace the black cartridge (right carriage position) with the photo cartridge. Store the black cartridge in the case provided with the photo cartridge.

To change the photo or black cartridge, use the install cartridge procedure described in the "Changing Print Cartridges" section of this chapter. To ensure correct ink level records are maintained, always select **old** when installing a used black or used photo cartridge. Use **new** only when installing a new cartridge.

The ink level for one used ink cartridge of each type (color, black, and photo) is tracked. The use of a second old cartridge of the same type disrupts ink tracking and will result in incorrect ink level reporting and possibly lost faxes.

When you have finished using the photo cartridge, immediately swap it with the black cartridge.

The reasons for replacing the photo cartridge with the black ink cartridge are:

- Photo cartridges should be used for printing pictures. Using it for normal faxing and black printing operations will prematurely deplete the black ink in the photo cartridge.
- Printing black with the photo cartridge installed will be much slower than using the black cartridge.
- Normal incoming faxes cannot be printed when the Photo cartridge is installed. They will be saved to memory so you may print them later.

Always store the unused black or photo cartridge in the storage container provided with the photo cartridge.

Loading Different Sized Paper

The A4000 supports A4, Letter, and Legal sized paper in the paper input tray.

To load paper into the A4000:

1. Extend the paper support on the paper input tray.
2. Insert the paper into the paper input tray. Orient the paper so that the head of the paper is facing down, and the side you want to print on is facing you.
3. Align the paper with the paper guides. Squeeze the paper guide and move it to the right to match the width of the paper.

For standalone copy and fax operations make sure that you select the correct paper size.

It may be necessary to change the paper size in two places. Use the Settings utility or the Front Panel to change the paper size for fax and stand-alone copying. Use Printer Properties to set the paper size for PC printing and PC assisted copying.

Setting Paper Size using the Settings Utility

1. Access the Compaq A4000 Settings Utility by clicking on the A4000 Monitor icon, or click **Start→Programs→Compaq A4000 All-In-One→Compaq A4000 Settings Utility.**
2. Select the **Fax** button.
3. Select the size of the paper from the Paper Size drop down box.
4. Close the Settings Utility.

Setting Paper Size using the Front Panel

1. Press **Setup**.
2. Press the **Menu** button until the following message appears on the LCD panel:

```
PAPER SIZE
          LETTER
```

3. Press the **Options** button until the desired paper size appears on the LCD panel.

```
PAPER SIZE
             A4
```

```
PAPER SIZE
          LEGAL
```

4. Press **Stop** to return to the ready state. The last paper size displayed is the size that will be used.

Setting the Paper Size for Computer Printing

1. Open the PRINTERS folder by clicking on **Start→Settings→Printers.**
2. Click with the right mouse button on the **Compaq A4000** icon, then select **Properties.**
3. Select the **Paper** tab.
4. Select the size and type of paper installed.
5. Click **OK.**

Printing on Envelopes

Preparing Envelopes for Printing

The following envelopes are not recommended because they may cause jams or smears, or may damage the A4000.

- Envelopes with windows, holes, perforations, cutouts, and double flaps
- Envelopes made with special coated paper or deeply embossed paper
- Envelopes containing letters

Loading an Envelope

Before you can print on an envelope, you must select the envelope as your paper size. Refer to the printing documentation of your word processing software for instructions on how to do this.

1. Remove the paper from paper input tray.
2. Load envelopes to the right (viewed from front). The side you will be printing on should be facing you.
3. Squeeze and slide the paper guide so that it touches the envelopes.
4. Set up the application to print on the size of the envelope loaded. You can set up the print size from the **Properties** button of the **Print** dialog box.
5. Print the envelope(s).

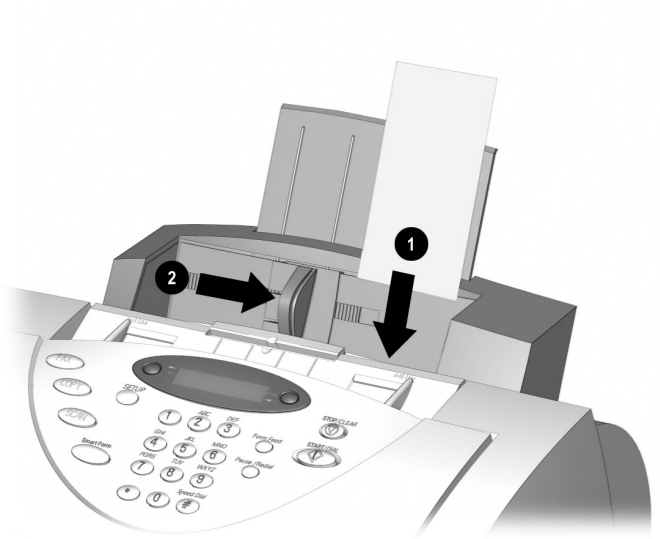

Inserting an envelope

When printing is complete:

1. Replace the printer paper in the paper input tray.
2. Squeeze and slide the paper guide so that it touches the paper.

Calibrating the Scanner

The scanner may need calibrating if you see vertical streaks in your scanned or copied images. This procedure is also recommended after cleaning the document scanner. See the *Maintaining Your A4000* chapter in this guide.

To re-initialize the scanner calibration, complete the following steps:

1. Place a clean, white sheet of paper in the document input tray.
2. Press **Setup** on the A4000 front control panel.
3. Press the **Menu** button twice. MAINTENANCE will appear in the top line.
4. Press the **Options** button twice. SCANNER INIT will appear in the bottom line of the display.
5. Press **Start.**
6. The calibration process will take about one minute.

Front Control Panel Setup Button

From the **Setup** button on the All-In-One control panel, you can select the following features. Most of the features along with many more features are available from the Compaq A4000 Settings Utility on your computer.

To access the **Setup** button features:

1. Press the **Setup** button.
2. Press the **Menu** button to cycle through **Setup** button features.
3. Press the **Options** button to change the settings.

Setup Button

Menu	Options	Description
Date/Time	• Month/Day/Year • Hour/Minute/AM/PM	These options allow you to change the date and time.
Print Report	• Fax Confirm • Transmit Log • Receive Log • Speed Send List • Self Test	The Fax Confirm Report prints a report for the last fax sent. The Transmit Log lists the faxes that were sent. The Receive Log lists the faxes that were received. The Speed Send List lists the Speed Send numbers and names. The Self Test checks that the printer is functioning correctly. Press the **Start** button to initiate the selected report.
Maintenance	• Cartridge Clean • Cartridge Align • Scanner Init	Use Cartridge Clean when the Self Test page shows a clogged nozzle. Use Cartridge Align when the printed text looks jagged. Use Scanner Init to recalibrate the scanner after cleaning the scanner or when vertical stripes are visible in scanned images. Press the **Start** button to initiate the selected report.
Paper Size	• Letter • Legal • A4	Use this feature for fax printing and standalone copy functions only. The size of paper loaded into the paper input tray should always be selected here.
Ringer Volume	• Silent • Low • Mid • High	Select Silent for quiet fax reception. When selected, error tones are not generated. Use these settings to adjust the ringer volume.
Fax Print	• Letter Quality • Draft Quality	Use Letter Quality for the best quality print. Use Draft Quality to print faster and use less ink.
Fax Forwarding	• Off • Forward • Print/Forward	Fax Forwarding allows you to forward your faxes to another fax machine. Select **Off** to turn Fax Forwarding off, **Forward** to forward your faxes, and **Print/Forward** to print your faxes locally as well as forward them. .For more information, see the chapter on *Faxing*, and the *Using the Compaq A4000 Settings Utility* chapter.
Fax Receive Mode	• Tel • Ans/Fax • Fax • DRPD	The Tel setting allows you to use an extension telephone and start the fax by pressing *9* on the handset if an incoming fax is heard. The Ans/Fax settings allow an answering machine to be attached to your A4000. When a call comes in, the fax senses the fax tones. If it doesn't sense these tones, then the answering machine allows the caller to leave a message. The Fax setting should be used when the A4000 is attached to a dedicated Fax telephone line. The DRPD mode is available once a distinctive ring pattern is learned.
Setup DRPD	• Learn	Press **Start** to set the A4000 to learn the next ring pattern. Call the Fax telephone number from another telephone within three minutes. You must have the DRPD Service enabled by your telephone company.

Using the Compaq A4000 Settings Utility

Settings Utility Overview

The A4000 Settings Utility allows you to change the default settings of your A4000 All-In-One. For instance, if you make a copy by pressing the Copy button and then Start, the default copy settings will be used.

The default copy setting is Black Normal. If you normally perform color copies, you can change the default to Color Normal instead by using the Settings Utility. You can customize dozens of settings to suit your preferences.

You can always make a temporary change for a specific job (for instance, changing the mode to Color Best while performing a copy). When you are finished with the current job, the A4000 will default back to the settings you have chosen with the Settings Utility.

Accessing the Settings Utility

There are a number of ways to access the A4000 Settings Utility:

- From the **Start** button:

  Click **Start→Programs→Compaq A4000 All-In-One→ Compaq A4000 Settings Utility.**

- From the system tray, left click on the A4000 Monitor icon, as shown below:

- From the system tray, right click on the A4000 Monitor icon, and select **A4000 Settings** from the menu that appears.

The A4000 Monitor Right Click Menu

Main Settings Window

The main settings window is the starting point for accessing all of the A4000 settings. Select one of the buttons to change the default settings of the corresponding All-In-One feature (Fax for Fax settings, Copy for Copy settings, and so on).

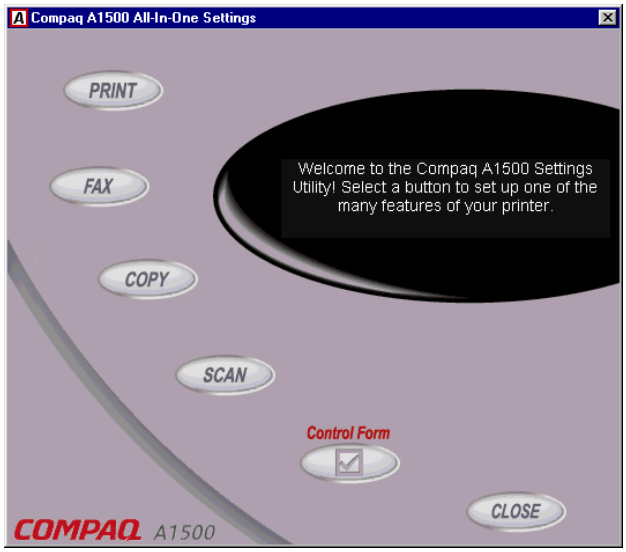

The Main Settings Window

You can make changes to your A4000 settings even when your A4000 is not connected to your computer. Any changes will be sent to the A4000 the next time it is connected.

IMPORTANT: Your settings changes are sent to the A4000 after you press the **Ok** button, the **Close** button, or the **[x]** close button.

Print Settings

Select the Print button from the main settings window to access the Print Settings.

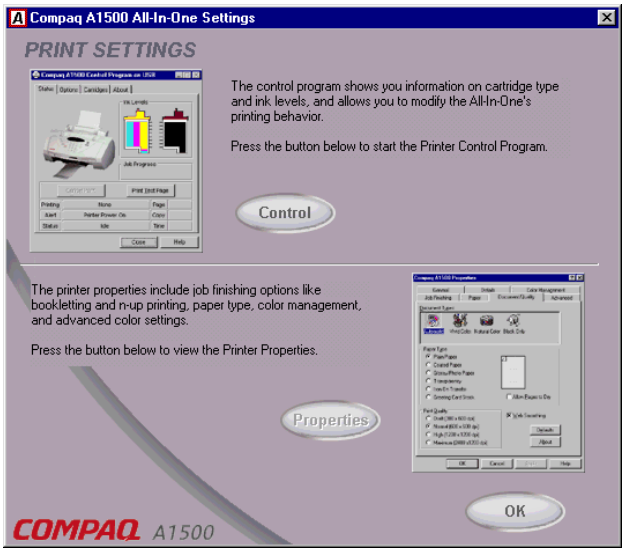

Print Settings Window

The Print Settings gives you access to the *Control Program* and the *Printer Properties*.

For more information on using the Control Program and Printer Properties, see the **Printing** chapter later in this manual.

Fax Settings

Select the Fax button from the main settings window to access the Fax Settings.

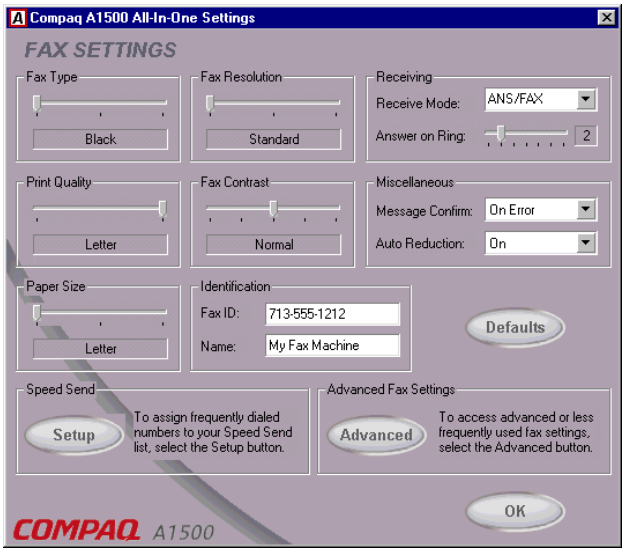

Fax Settings Window

Fax Type

The Fax Type determines the type of fax to be sent, either Black, Black Photo, or Color. This will be the format used when sending the fax through email as well.

When sending color faxes, the receiving fax machine will print in color only if it supports color. Otherwise the fax will be sent as a traditional black and white fax.

Fax Resolution

Select Standard, Fine, or Super Fine resolution.

Print Quality

When a fax is received, it will be printed using draft or letter quality. If you receive a lot of junk faxes, you should use the Draft setting to reduce the amount of ink used.

Fax Contrast

Lighten or darken your faxes with Fax Contrast.

Receive Mode

The Receive mode controls how your fax answers incoming calls. See the *Faxing* chapter later in this manual for a full description of the possible modes.

Message Confirm

By default, the A4000 will print a message confirmation report only when it encounters errors while sending a fax. You can turn confirmation on for all faxes, or turn it off completely.

Auto Reduction

Auto Reduction will reduce incoming faxes so they fit on the selected paper size.

Paper Size

The A4000 supports letter, legal, and A4 sized paper.

Fax ID and Name

This information appears at the top of your outgoing faxes. We recommend setting the Fax ID to your fax phone number, and set Name to your name or company name.

Defaults

To reset all of the fax settings to the A4000 defaults, press this button.

Speed Send Setup

Press the **Setup** button to set up your list of frequently dialed fax numbers and to create group lists. See the Speed Send section for more information.

Advanced Fax Settings

Press the **Advanced** button to display the advanced fax settings. The advanced settings are described below.

Advanced Fax Settings

From the Fax Settings page, you can access the Advanced Fax settings.

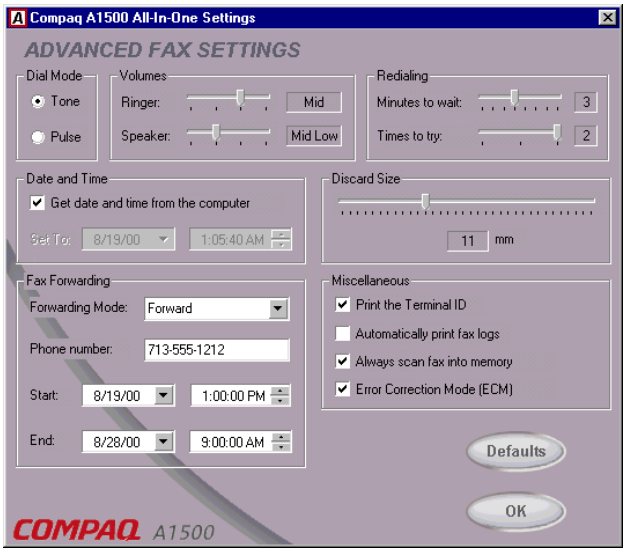

Advanced Fax Settings Window

The Advanced Fax Settings page contains fax settings that are infrequently used or changed.

Dial Mode

Almost all phone lines support touch tone dialing. In case your phone line only supports pulse (rotary) dialing, you can change the dial mode.

Volumes

Use the volume sliders to adjust the ringer and speaker volumes to your liking.

If the A4000 is placed in a quiet environment, set the Ringer volume to **Silent** to mute all alarms and sounds.

Redialing

In the event a fax does not transmit the first time, due to a busy or noisy phone line, you can adjust how many minutes to wait between redials, and how many times to try the fax again.

Date and Time

The settings utility will synchronize the date and time between your computer and the A4000. If you would rather select a particular date and time yourself, uncheck the box and enter new values.

Discard Size

Sometimes a fax will be slightly longer than the paper in your input tray. Instead of printing a small amount of useless information on another page, you can discard it. Use the discard slider to set the amount of data you are willing to discard.

Fax Forwarding

If you will be away from your home or office, you can have your faxes forwarded to you while you are gone. To have the A4000 forward your faxes, select **Forward**, or to forward your faxes and print a local copy as well, select **Forward and Print**.

Enter the fax number you want the faxes forward to, and a starting and ending date and time during which fax forwarding will be active.

To disable Fax Forwarding before the end date and time, select **Disabled** as the Forwarding Mode.

Print the Terminal ID

When this box is checked, the A4000 will print the page number, date, time of reception, the Station Fax ID and the Name of the remote fax machine at the top of each received fax page. When unchecked, no information will be printed.

Automatically Print Fax Logs

Check this box to print a fax log every 40 transactions.

Always Scan Fax into Memory

Normally all pages of your fax are first scanned into memory and then transmitted. If you would rather have the pages scanned while transmitting them, uncheck this box. Typically this is done to conserve memory for incoming faxes. *Supported in Black Standard and Black Fine resolutions only.*

Error Correction Mode

To ensure error-free transmission with another fax machine running ECM, especially when the connection is poor, check this box.

Defaults

To reset all of the advanced fax settings to the A4000 defaults, press this button.

Speed Send Settings

The Speed Send Settings are accessed from the Fax Settings page.

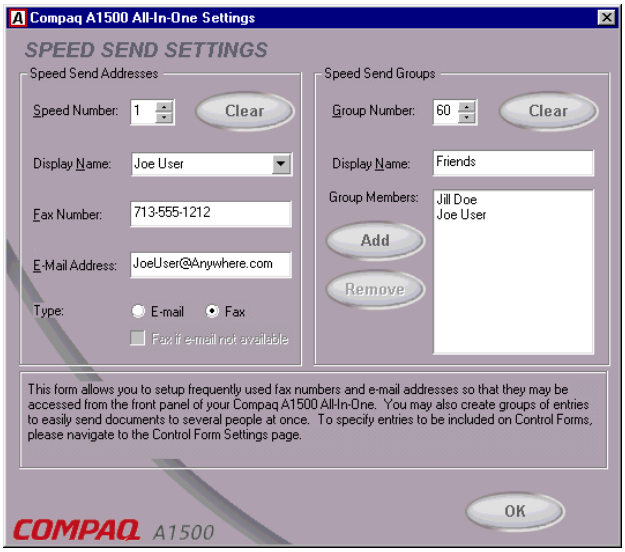

Speed Send Settings Window

Your A4000 includes a Speed Send button (the # button). As the name implies, you can use this button to send faxes and emails quickly, to one person or to many people all at once.

The Speed Send Settings window lets you maintain a list of fax numbers and email addresses. These are assigned to Speed Send numbers.

To learn more about sending faxes and emails with the Speed Send button, see the *Faxing* chapter later in this manual.

Speed Send Addresses

You can store up to 59 individual names and numbers in your Speed Send list. Entries are numbered 1 to 59.

Speed Number

To store an entry, first select the number you wish to assign to that entry. This number will be used to send the fax later. The numbers do not have to be sequential, so you can pick numbers that are meaningful to you.

Display Name

Once you've chosen a number, give the entry a name. This name can be up to 14 characters, and will be displayed on the A4000 LCD panel.

Fax Number

If this person has a fax number, enter the number here. If you need to dial a number to access an outside line, be sure to include it. Use a comma or a "P" to pause the dialing.

E-Mail Address

If this person has an email address, enter it here. The A4000 can send faxes as email (see Type below).

Sending a fax as an email requires a MAPI-enabled email program to be on your computer, such as Microsoft Outlook Express, an email account, and an internet connection.

Type

Chose whether faxes should be send as a normal fax, or as a fax via email. Use the checkbox to indicate you want the fax sent through normal means when the PC is not available for email.

Clearing an Entry

To clear an entry of all information, first select the speed send number you wish to clear and then press the **Clear** button.

Selecting an Entry for Viewing or Editing

There are three ways of selecting a Speed Send entry for viewing or editing:

1. Use the Speed Number. Type the number in the box, or scroll to it using the adjacent arrows.
2. Use the Display Name drop-down list. Click on the arrow to the right of the display name to display a listbox, then scroll to the name you wish to edit.
3. If the name is part of a group, simply double click on the name in the Group Members box to display the entry.

Speed Send Groups

You can create up to ten (10) Speed Send Groups. Group entries are numbered 60-69.

Group Number

To create a group, first select a group number. As with the individual entries, groups do not need to be sequential.

Display Name

Once you've chosen a group number, give the group a name. The group name can be up to 14 characters, and will be displayed on the A4000 LCD panel.

The LCD panel will indicate whether a Speed Send entry is a group by displaying the word **GROUP** by the entry number.

Group Members

The Group Members list shows all of the members of the Speed Send group.

Adding a Member

To add a member to the group, select an entry in the Speed Send area on the left. Press the Add button to make that entry part of the current group. You can add the same entry to more than one group.

Removing a Member

To remove a member from a group, select the name you wish to remove by clicking on their name. Press the Remove button to remove the name from the group.

Clearing the Group

If you wish to clear all of the members from a group, press the Clear button.

Speed Send All Group #70

The Settings utility creates a special hidden group that contains all of the speed send entries you have defined. If you ever want to send a fax to all of the people in your Speed Send list, use group #70.

Copy Settings

The Copy Settings window controls how the A4000 makes copies.

Copy Type

By default, the A4000 makes normal resolution black and white copies. You can change the default copy type to three different black settings and three different color settings. Choose the type of copy you expect to usually make.

Copy Contrast

The Copy Contrast setting controls the lightness or darkness of the copy. Use the contrast to lighten or darken your copies.

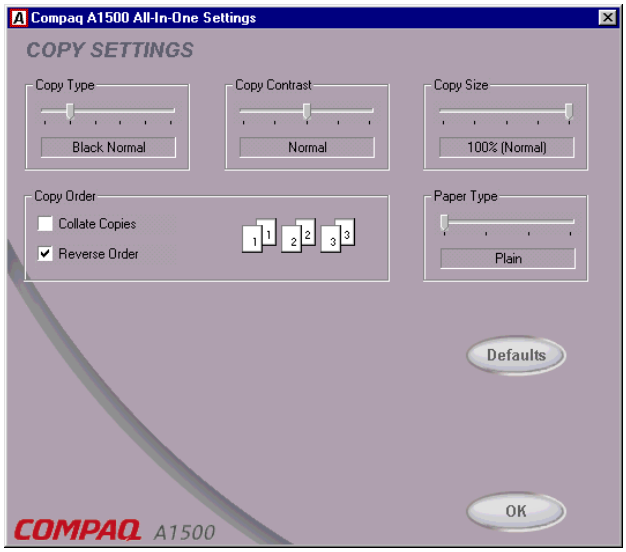

Copy Settings Window

Copy Size

If you regularly scale your copies down to a smaller size, use the Copy Size setting to select the default scale. For instance, you can set the scaling so legal sized documents are scaled down to letter size when copied.

Copy Order

Normally, multiple copies are made as each page is scanned. If you want to collate your copies, or reverse the order so the first page is printed last, check these boxes.

The computer is required when collating or reversing multiple page black photo or color copies.

Paper Type

The paper type makes a big difference when making color copies. Select the default paper type used when you make color copies.

Defaults

To reset all of the copy settings to the A4000 defaults, press this button.

Scan Settings

The Scan Settings window controls the scan type and contrast and the Scan To list.

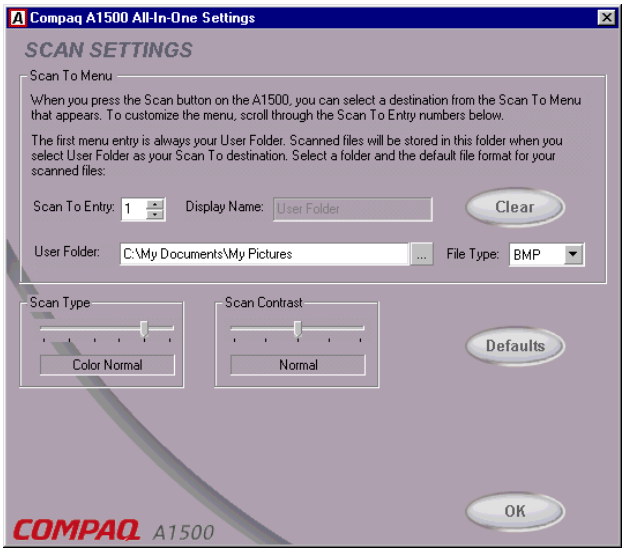

Scan Settings Window

Scan To Menu

When you press the Scan button on the A4000, a Scan To menu appears on the LCD display panel. The first two menu entries are **User Folder** and **Email**. You can add up to 12 additional menu options for your favorite applications.

Scan To User Folder

The first menu entry is always the **User Folder**.

The User Folder is where your scanned pictures are stored after you scan them. Once scanned, they will be given the filename of **Month-Day-###.ext**, such as Aug-05-002.JPG.

By default, the User Folder is set to **My Pictures**, which is usually located in your **My Documents** folder. You can change this to any folder you wish. Type in the new folder name, or press the **[...]** button to browse for an existing folder.

Images can be stored in one of three popular file types (Windows bitmap BMP, TIFF, or JPEG), or one of two text formats (ASCII Text TXT, or Rich Text Format RTF). Select a default file type.

You can change the file format each time you scan. Press the **Menu** button after pressing the **Scan** button and choose a new file type.

Scan To Email

The second Scan To menu entry is always **Email**. To scan to email, you must have an internet account and connection, a valid email address, and an email program that supports MAPI (such as Microsoft Outlook, Outlook Express, Eudora, etc).

By default, the TXT file format is used for Emails. Your documents will be scanned, converted by ReadIRIS, and then placed into the body of your email message.

You can select a different default file type, or change the file type when you scan. Your scanned files will be attached to the email message.

Once scanned, your email program will be run. You can then select recipients from your email address book, add a subject, and type a message. Be sure and read over any scanned text to verify its accuracy.

To automatically send faxes as emails without any user interaction, see the *Fax Speed Send* section.

Scan To Applications

Once an image is scanned, the A4000 can launch your favorite image processing applications. You can define up to twelve (12) additional Scan To applications, numbered 3 to 14.

Scan To Entry

To store an entry, first select the number you wish to assign to that entry. The numbers do not have to be sequential. Pick numbers that are meaningful to you.

Display Name

Once you've chosen a number, give the entry a name. This name can be up to 14 characters, and will be displayed on the A4000 LCD panel.

Application

Type the path of the application program you want to use to edit or view the scanned image. To browse for a program, click on the **[...]** browse button.

File Type

Select a file type that is compatible with the program. For graphics programs, choose one of the graphics file formats (**BMP**, **TIFF**, or **JPG**). For text or word processing programs, choose **TXT** or **RTF**. .

ReadIRIS must be installed to convert your scanned files into the text (TXT) or word processing (RTF) formats. ReadIRIS is normally installed as part of the A4000 software installation.

Clearing an Entry

To clear an entry of all information, first select the entry number you wish to clear and then press the **Clear** button.

Scan Type

By default, the A4000 performs normal resolution color scans. You can change the default scan type to three different black settings and three different color settings. Choose the type of scan you expect to usually make.

Scan Contrast

The contrast setting controls the lightness or darkness of the scan. Use the contrast to lighten or darken your scans if needed.

Defaults

To reset all of the scan settings to the A4000 defaults, press this button.

Control Form Settings

The Control Form Settings window allows you to select Speed Send entries for your Control Form **Fax From** and **Fax To** sections.

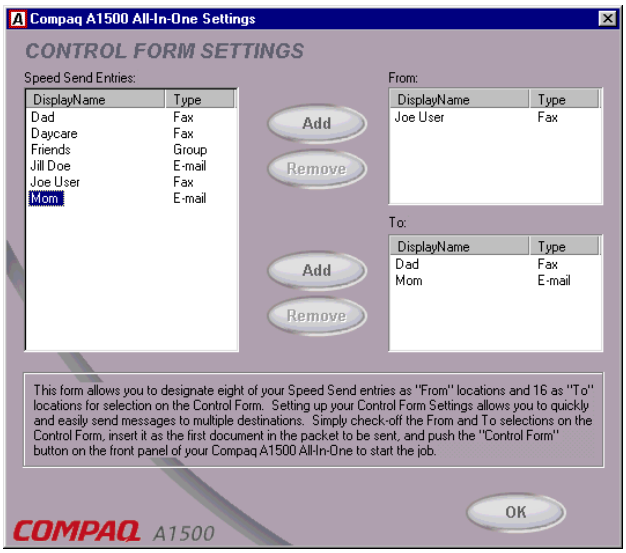

Control Form Settings Window

The From and To entries will appear on the Control Form when it is printed. A checkbox will appear next to each name. To send a fax with the Control Form, you simply check the boxes.

For more information on using a Control Form, see the *Control Form* section later in this guide.

Speed Send Entries

This box will list all of the Speed Send entries you currently have defined. You must first set up your speed send list before you can add any entries to the Control Form. See the *Speed Send Settings* section earlier in this chapter for help.

From List

A Control Form supports up to eight (8) Fax From entries. The **From** box displays the speed send entries currently in the Fax From list.

To List

A Control Form supports up to sixteen (16) Fax To entries. The **To** box displays the speed send entries currently in the Fax To list.

Adding an Entry

To add a Speed Send entry to the From or To lists, select the entry by clicking on the name in the Speed Send Entries box. Then select the Add button next to the list you wish to add the entry to.

Removing an Entry

To remove a From or To entry, select the name you wish to remove by clicking on it. Then select the Remove button.

Printing a Control Form

Once you have defined the From and To lists, close the settings window to save your entries. Print a Control Form by pressing the Control Form button on the front control panel of the A4000.

Note that the scanner input tray should be empty before attempting to print a Control Form.

Control Form

Overview

The Compaq Control Form is a paper document that you can use to give instructions to your A4000. You can mark it with a pencil or pen and feed it into the scanner. The A4000 software will then read your instructions and execute them.

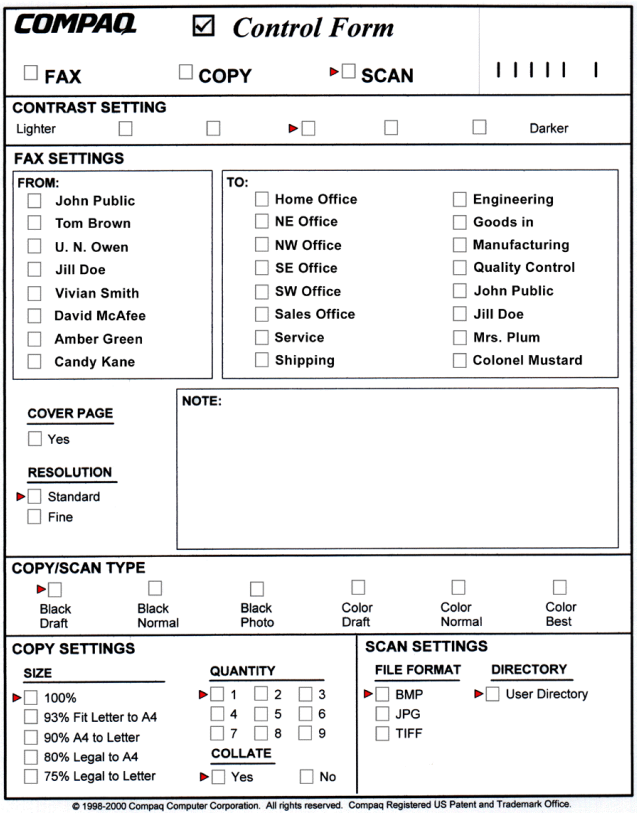
COMPAQ ☑ Control Form

☐ FAX ☐ COPY ▸☐ SCAN

CONTRAST SETTING
Lighter ☐ ☐ ▸☐ ☐ ☐ Darker

FAX SETTINGS

FROM:
☐ John Public
☐ Tom Brown
☐ U. N. Owen
☐ Jill Doe
☐ Vivian Smith
☐ David McAfee
☐ Amber Green
☐ Candy Kane

TO:
☐ Home Office
☐ NE Office
☐ NW Office
☐ SE Office
☐ SW Office
☐ Sales Office
☐ Service
☐ Shipping
☐ Engineering
☐ Goods in
☐ Manufacturing
☐ Quality Control
☐ John Public
☐ Jill Doe
☐ Mrs. Plum
☐ Colonel Mustard

COVER PAGE
☐ Yes

RESOLUTION
▸☐ Standard
☐ Fine

NOTE:

COPY/SCAN TYPE
▸☐ Black Draft ☐ Black Normal ☐ Black Photo ☐ Color Draft ☐ Color Normal ☐ Color Best

COPY SETTINGS

SIZE
▸☐ 100%
☐ 93% Fit Letter to A4
☐ 90% A4 to Letter
☐ 80% Legal to A4
☐ 75% Legal to Letter

QUANTITY
▸☐ 1 ☐ 2 ☐ 3
☐ 4 ☐ 5 ☐ 6
☐ 7 ☐ 8 ☐ 9

COLLATE
▸☐ Yes ☐ No

SCAN SETTINGS

FILE FORMAT
▸☐ BMP
☐ JPG
☐ TIFF

DIRECTORY
▸☐ User Directory

© 1998-2000 Compaq Computer Corporation. All rights reserved. Compaq Registered US Patent and Trademark Office.

A Printed Control Form

A Control Form can be used more than once and you can use it to perform a variety of operations simultaneously. For example, if you wanted to make a paper copy of a document and store an image of that document on your computer, you could do both of these operations at once on a single Control Form. You could also reuse that form each time you want to do a similar job.

You may want to print several copies. Keeping a supply of printed Control Forms available will save time when you are ready for the A4000 to perform a task.

Control Form provides an easy way to work with your A4000. It is particularly useful if you need to do several things with one document.

For example:

- Check the scan box to store a scanned image on your hard drive in the format of your choice
- Check applicable boxes in the FAX section to automatically send a document to any previously defined Speed Send entry in the Control Form.
- Check a combination of Fax, Copy, and Scan boxes on the Compaq Control Form to perform several operations at once.

You can only use the Control Form when the A4000 is attached to a PC, and the PC is on and available.

Printing a Control From

To print a Control Form, make sure the scanner input tray is empty. Then simply press the Control Form button on the A4000 control panel.

Once a Control Form has printed, you can use a check mark to identify the operations (fax, copy, or scan) you want to perform. Any kind of mark will work…you can use an X or just scribble in the box.

A triangle identifies the default settings. If the settings are the settings you want, you do not need to recheck these boxes.

Using a Control Form

Using a Control Form is easy. Once you have printed one out, simply check the boxes for the operations you wish to perform and follow these steps:

1. When you have made your selections, put the document that you want to fax, copy, or scan behind the Control Form.
2. Place the Control Form and documents face down in the document input tray with the top of the document facing down.
3. Press the **Control Form** button on the control panel to perform the selected operations.

Using the Control Form to Copy

1. Press the **Control Form** button. A Control Form will print.
2. Check the **Copy** box at the top of the page.
3. The default settings on Control Form are indicated with a triangle. You can change these settings by checking the desired settings in the Copy Settings section. For example, if you want 9 copies, check the 9 box.
4. When you have made your selections, put the documents that you want to copy behind the Control Form. Place the documents to be copied **face down** and **top down** into the document input tray.
5. Press the **Control Form** button on the control panel. The copy process begins.

Using the Control Form to Scan

1. Press the **Control Form** button. A Compaq Control Form will print.
2. Check the **Scan** box at the top of the page.
3. The default settings on the Control Form are indicated with a triangle. You can change these settings by checking the desired settings in the Scan Settings section.
4. When you are finished, put the documents that you want to scan behind the Compaq Control Form. Place the document(s) to be scanned **face down** and **top down** in the document input tray.
5. Press the **Control Form** button on the control panel. The scan process begins.
6. The Control Form and document are scanned and the image is sent to the selected destination. See the *Compaq A4000 Control Form* chapter for more details.

Using the Control Form to Fax

You can use the Compaq Control Form to fax documents. But first, see the *Compaq A4000 Settings Utility* section for instructions on setting up your Control Form Fax FROM and Fax TO lists.

Control Form can display up to eight (8) FROM entries and sixteen (16) TO entries in the Fax section.

The FROM entry is used to show who the fax is from. When sending a traditional fax, this shows up on the cover page. For a fax sent as email, the FROM entry is used to enter the reply-to email address. Usually you check only one FROM box.

The TO entries determine who the fax is sent to. Check the box next to each person's name. Each person will receive a traditional fax or a fax sent as email, depending on their Speed Send entry.

Check applicable boxes in the Fax Settings section to send a document to the Speed Send entry on the Control Form. All of the selected entries on the Control Form will receive the document that follows it. In addition, if you check the **COVER PAGE** box, each of the recipients will receive your handwritten note from the **NOTE** area on an individually addressed cover sheet. *The Control Form itself will not be sent.*

To send a fax using the Control Form:

1. Press the **Control Form**. A copy of the Control Form will print. Default settings are identified with a triangle next to the setting box.
2. Check the **Fax** box at the top of the page and the desired settings in the **Contrast** and **Fax Settings** areas.
3. Check the name of the person who is sending the fax in the **Fax FROM** section.
4. Check the names of the people who are receiving the fax in the **Fax TO** section.
5. If you would like a cover page, check the **Cover Page** box. Write any message you want to appear on the cover page within the **Note** section.
6. When you are finished, put the documents that you want to fax behind the Compaq Control Form. Place the documents printed side **face down** and **top down** in the document input tray.
7. Press the **Control Form** button on the control panel. The fax will be sent.

You can perform more than one Control Form operation at time. It is possible to scan documents to your User Folder, make multiple copies of them, and then fax them…all at once!

Printing

This chapter provides some basic steps for printing a document. The exact steps for printing may vary from one software program to another. Refer to your software application's user manual for detailed printing steps.

Printing a Document

To print a document:

1. Start a program and create a document, or open an existing document that you want to print.
2. Open the program's **File** menu.
3. Select **Print...** or **Print Setup** from the **File** menu. Make sure the Compaq A4000 is selected as your printer. If it isn't, select it now.

When installed, your A4000 is initially set as the default printer.

4. Click **Properties** or the **Setup** button if you want to change the settings that are appropriate for printing that document.
5. Select **OK** to close the **Properties** dialog box.
6. Select **OK** to print after making any necessary changes to your print settings.

Changing the Printer Properties

Most Windows software applications allow you to make changes to the printer properties. The properties are the settings used when you print. This includes settings that determine how a print job looks, such as page size, paper orientation, and margins. Settings changed in the software application will override settings made in the printer driver.

The printer driver includes many of the settings mentioned above (in case your software does not include them). It also includes settings that determine how your printer will operate.

Changes you make to the printer properties from within an application will only last while that application is running.

To change the default printer properties for all applications, access the printer properties from the Settings Utility. You can do this two ways:

1. Left click on the A4000 Monitor icon in the system tray. Click on the **Print** button, and then click on the **Properties** button to view the Printer Properties.

   -or-

2. Right click on the A4000 Monitor icon, and select **Properties** from the displayed menu.

See the *A4000 Settings Utility* section for more information.

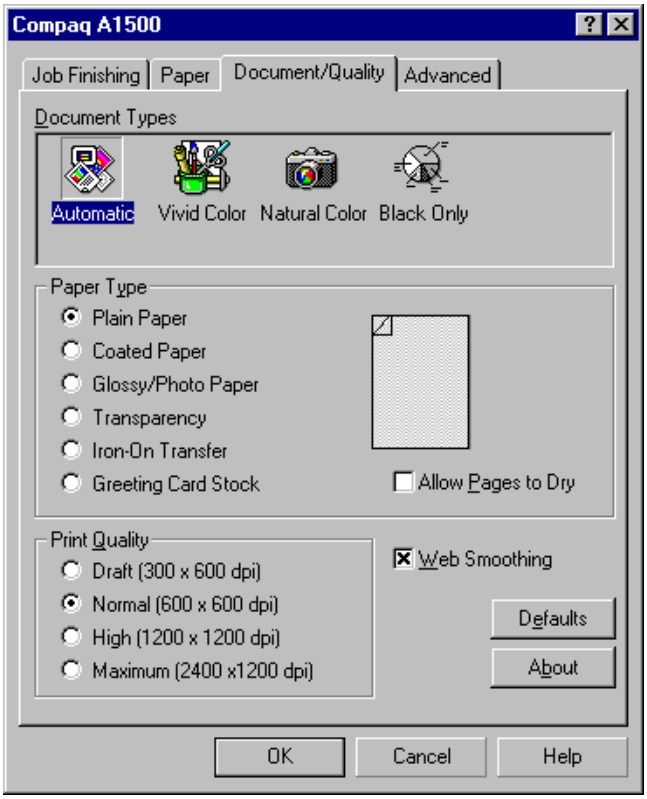

Printer Properties

Job Finishing

The **Job Finishing** tab in the printer properties provides options for you to adjust how the document will appear on the printed page. Finishing options can include Booklet, Poster, Handout and Two-sided Printing.

The Job Finishing options available will vary depending on your printer driver and operating system.

Booklet

The Booklet option allows you to print a document out as a booklet. If the *Print Instruction Page* is checked, a page will print directing you how to insert the paper so that the booklet prints correctly.

Poster

Choose the *Poster* option from the *Job Finishing Operations* drop down list to enlarge the printed document. If you check *Show Crop Marks*, the image will print with crop marks. The white space around the image can be easily trimmed.

Handout

Choose the *Handout* option from the *Job Finishing Operations* drop down list to print multiple pages on a single sheet of paper. If you want to print the document on both sides of the paper, you can change the binding edge to change how the image is printed.

Two-Sided Printing

Choose the Two-Sided Printing option from the Job Finishing Operations drop down box to print the document on both sides of the paper. If you check the Print Instruction Page box, a sheet will print describing how to insert the paper. Selecting the Binding Edge will print the image in either Portrait or Landscape mode.

Paper

Use the paper tab to select what size of paper you have in your printer, the orientation, the number of copies to print, etc.

You can also reverse the printing order of your document pages. The first page of your document will be on top of the stack in the paper exit tray. If you choose to collate your document, multiple copies of a multi-page document will be printed such that the documents are grouped together, rather than the pages.

Document/Quality

The Document/Quality tab controls the paper type, such as plan, coated, and glossy. It also controls the quality (resolution) of the printing. Higher resolutions print better, but take longer and consume more ink.

Advanced

The advanced tab allows you to change how the printer handles color printing. You should rarely need to change these settings, if at all.

Accessing the Control Program

To access the Compaq A4000 control program:

Click **Start→Programs→Compaq A4000 All-In-One → Compaq A4000 Control Program.**

-or-

Right click on the A4000 icon in the bottom right corner of the taskbar then select **Control Program** from the menu.

Control Program

When the Compaq A4000 Control Program window appears, click the appropriate tab for the options you want to display. Make the necessary changes on each tab.

Status

The status tab gives you general status information on the printer. You will see this window when the printer is printing (unless you've set the Control Program to run minimized, using the options below).

Once a print job has started, you can use this window to cancel the print job or monitor the job progress.

The ink level of your cartridges is also displayed. Use the gauges to help you determine when they need replacing.

Options

From the options tab, you can control some of the behavior of the Control Program. The options available will vary depending on your Operating System. Some of the options that might appear here include minimizing the window when a print job starts and enabling or disabling sound effects.

Cartridges

The Cartridges tab gives you access to several different cartridge functions. From here, you can install new cartridges, change them, clean your print nozzles, align your cartridges, or order supplies from the internet.

About

The About tab provides you with additional information regarding the Control Program and the printer driver. This is where you will find copyright notices and version information.