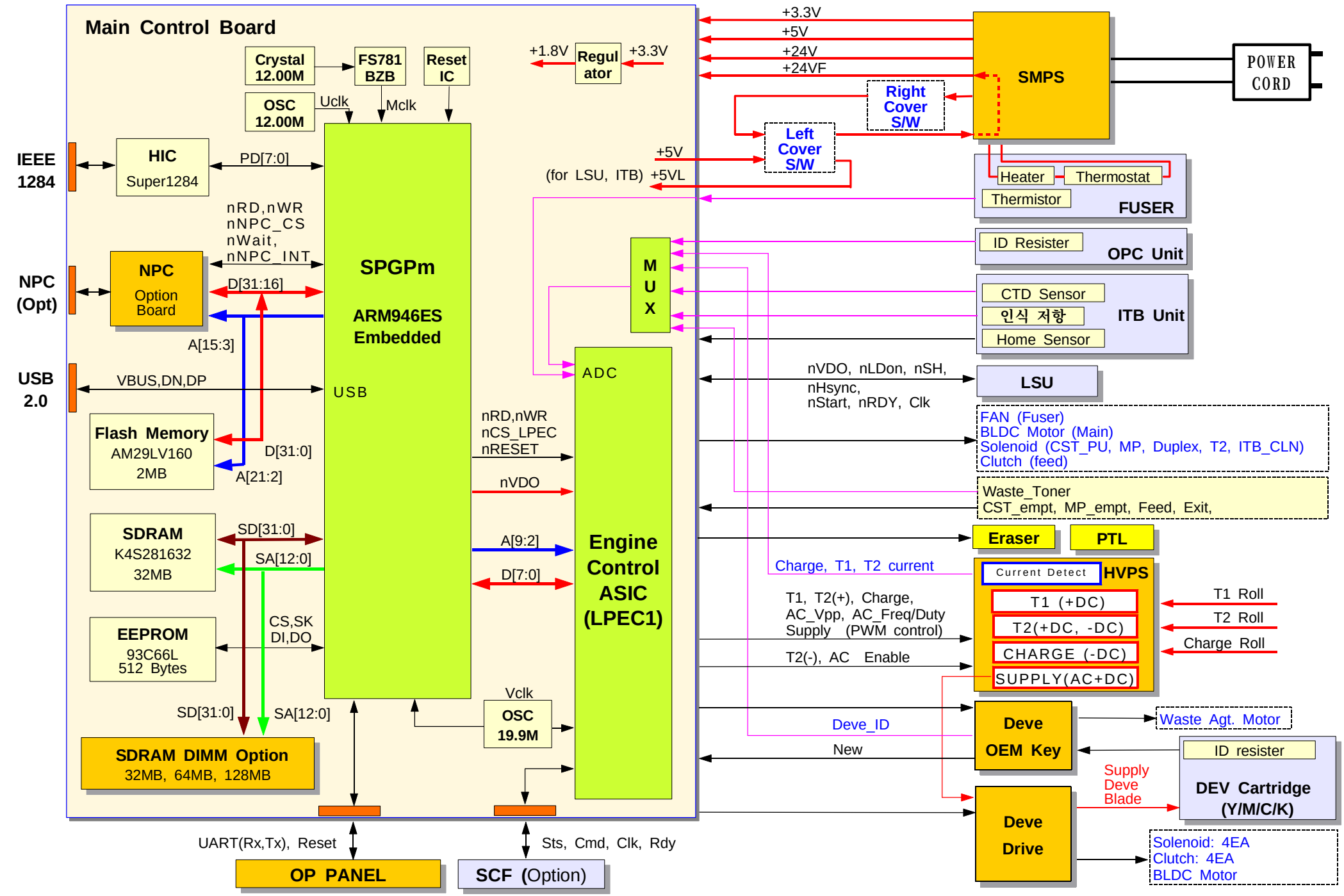# BigBang Controller Block Diagram