Replacing the Supplies

From time to time, you need to replace the following items to maintain top performance and to avoid print quality problems. Refer to the table below:

Item(s)	Printer message	Pages Printed	See page
Black toner cartridge	Replace Toner Black	7,000 pages*	6.7.
Color toner cartridges	Replace Toner [Color]	5,000 pages*	6.7.
Waste toner container	Waste Toner Tank Full/Not Install	3,000 images**	6.10.
Drum cartridge	Replace Drum Cartridge	50,000 images**	6.13.
Image transfer unit	Replace Image Transfer	50,000 images**	6.21.

*Average A4-/letter-sized pages counts based on 5% coverage of individual colors on each page. Usage conditions and print patterns may cause results to vary.

**Image counts based on one color on each page. If you print documents in full colors (Cyan, Magenta, Yellow, Black), the lives of these three items are reduced by 25%.

6

Managing the Toner Cartridges

Toner Cartridge Storage

To get the maximum results from the toner cartridge, keep the following guidelines in mind:

- Do not remove the toner cartridges from their packages until you are ready to use them.
- Do not refill the toner cartridges. **The printer warranty does not cover damage caused by using a refilled cartridge.**
- Store the toner cartridges in the same environment as the printer.
- To prevent damage to the toner cartridges, do not expose them to light for more than a few minutes.

Toner Cartridge Life Expectancy

The life of the toner cartridge depends on the amount of toner that your print jobs require. When printing text at 5% coverage, a new toner cartridge lasts an average of 7,000 pages for black and 5,000 pages for each color. The initial toner cartridge supplied with the printer lasts an average of 2,000 pages for black and 1,500 pages for each color.

At any time, you can verify the life expectancy by checking the toner level. See the below.

Checking the Remaining Toner

You can check the level of toner left in each cartridge.

1. Press the **Menu** button ( ) on the control panel until you see 'Setup' on the bottom line of the display.
2. Press the **Enter** button ( ) to access the menu.
3. Press the scroll button (or) until 'Maintenance' displays on the bottom line.
4. Press the **Enter** button ( ).
5. When 'Check Toner' displays on the bottom line, press the **Enter** button ( ).

6 Press the scroll button (◁ or ▷) until the color of the toner cartridge you want to check displays on the bottom line.

7 Press the **Enter** button (✱).

The display shows the percentage of the remaining toner.

Redistributing the Toner

When a toner cartridge is nearly empty, faded or light areas may appear on a printed page and 'Ready [CMYK] Low Toner' appears on the display. The printer can continue to print using the current toner cartridge until the control panel displays a message telling you to replace the cartridge.

You may be able to temporarily improve the print quality by redistributing the toner. The control panel display tells you which color cartridge is low in toner.

1 Using the handle, open the left cover completely.

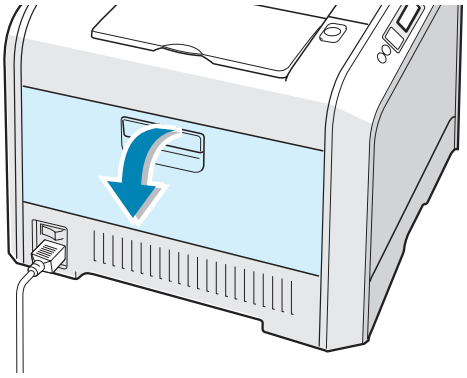

2 Pull the handle lightly first, and then holding the used toner cartridge, remove it.

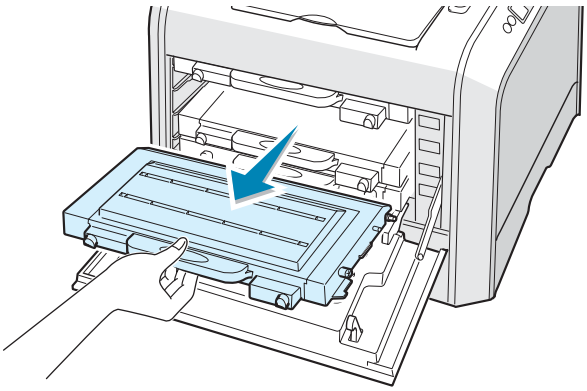

CAUTION: If you open the left cover for a long time, the drum cartridge can be exposed to light. This causes damage to the drum cartridge.

3 Holding both sides of the toner cartridge, gently roll it from side to side to redistribute the toner.

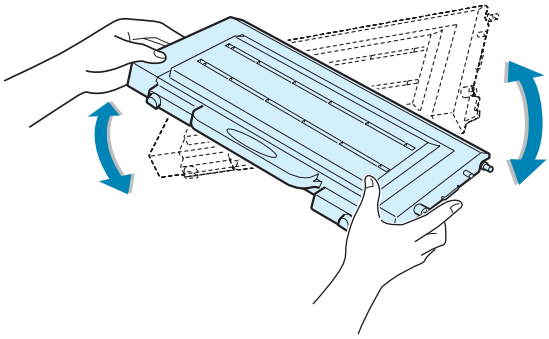

NOTE: If toner gets on your clothing, wipe it off with a dry cloth and wash it in cold water. Hot water sets toner into fabric.

4 Slide the toner cartridge back into the printer.

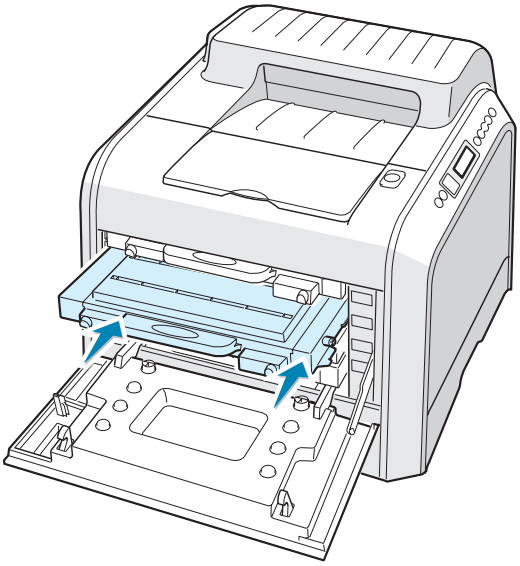

5 Close the left cover. Make sure that the cover is securely latched.

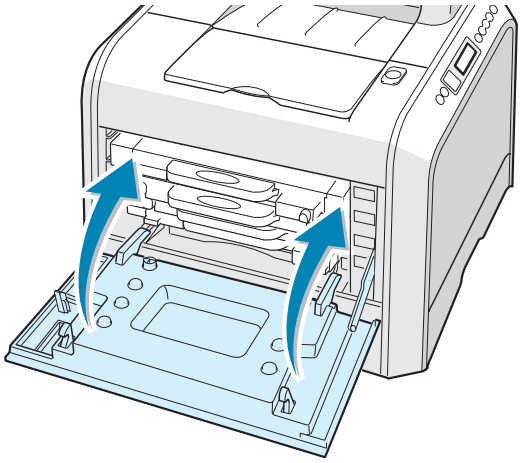

Replacing the Toner Cartridges

The printer uses four colors and has a different toner cartridge for each one: cyan (C), magenta (M), yellow (Y), and black (B).

Replace a toner cartridge when the printer control panel displays 'Replace Toner [Color]'. The control panel display tells you which color needs to be replaced.

1 Turn the printer off.

2 Using the handle, open the left cover completely.

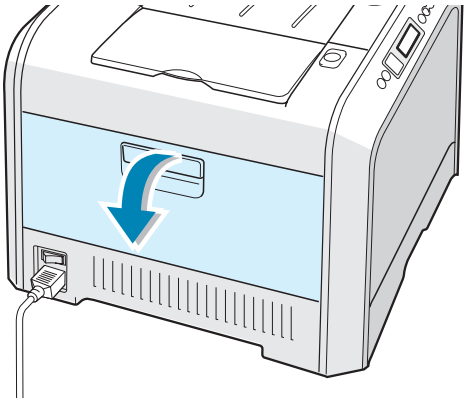

3 Pull the handle lightly first, and then holding the used toner cartridge, remove it.

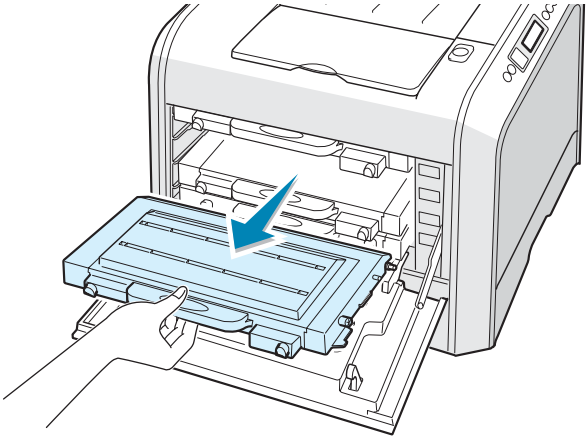

CAUTION: If you open the left cover for a long time, the drum cartridge can be exposed to light. This causes damage to the drum cartridge.

4 Take a new toner cartridge out of the package.

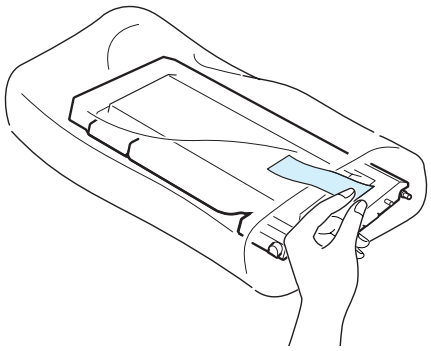

CAUTION: Don't use sharp objects, such as a knife or scissors, to open the toner cartridge package. You could damage the surface of the toner cartridge.

5 Place the toner cartridge on a flat surface as shown and remove the paper covering the toner cartridge by removing the tape. Discard the paper and tape.

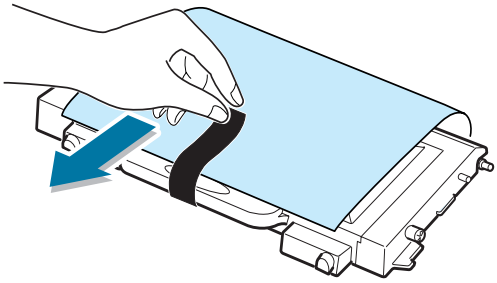

6 Holding both sides of the toner cartridge, gently roll it from side to side to distribute the toner.

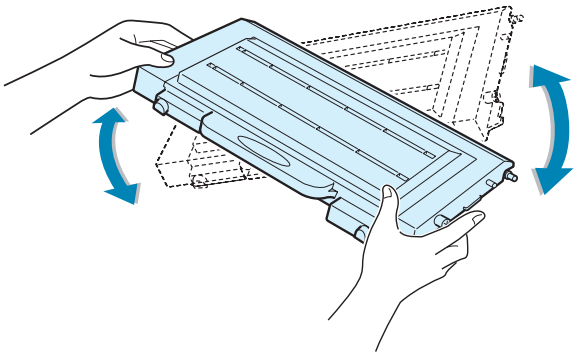

NOTE: If toner gets on your clothing, wipe it off with a dry cloth and wash it in cold water. Hot water sets toner into fabric.

7 Make sure that the color of the toner cartridge matches the color slot and then slide the new toner cartridge into the printer.

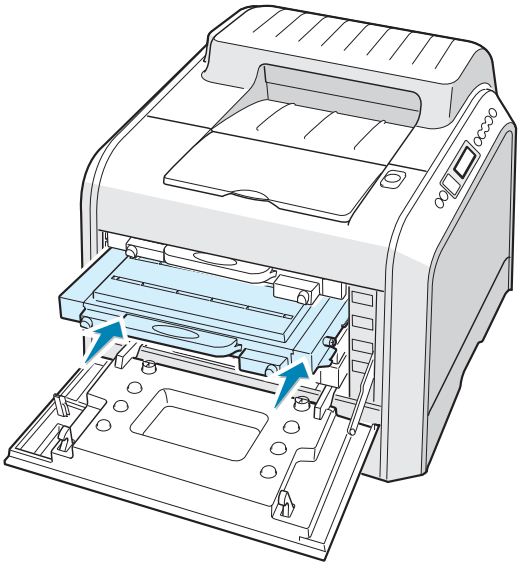

8 Close the left cover. Make sure that the cover is securely latched, and then turn the printer on.

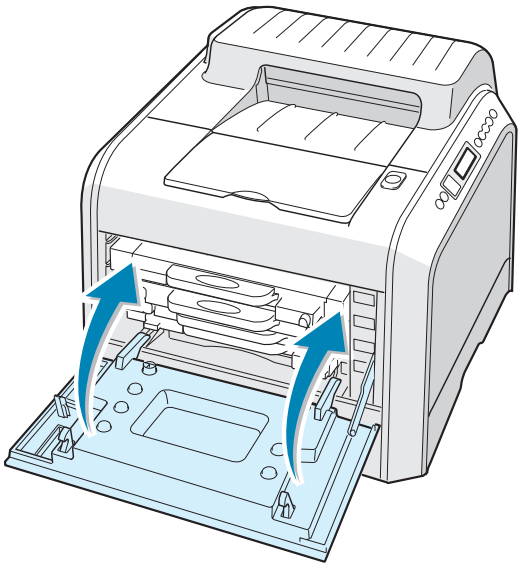

9 Open the front cover and clean the LSU. For details, see page 6.27.

Replacing the Waste Toner Container

Replace the waste toner container when the control panel displays 'Waste Toner Tank Full/Not Install'.

1 Unlatch the front cover, by quickly pressing and releasing it using the depressions at the top.

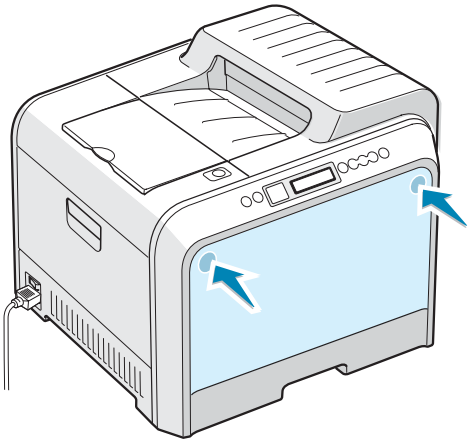

2 Push the lock lever up and pull the waste toner container out.

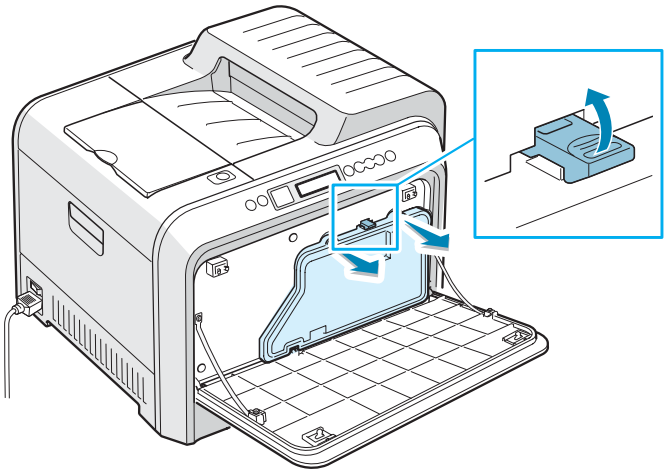

NOTE: Make sure that you lay the waste toner container on a flat surface so that the toner does not spill.

3 Remove the container's caps which are attached as shown below and use them to close the waste toner container.

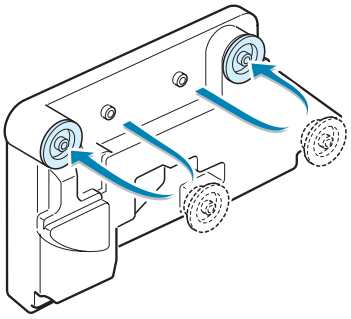

4 Take a new waste toner container out of the package.

5 Open the caps on the new container and attach them for future use as shown below.

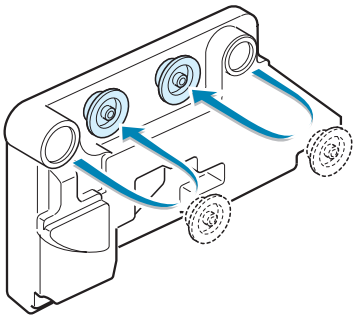

6 Locate the supplied LSU cleaner on the bottom.

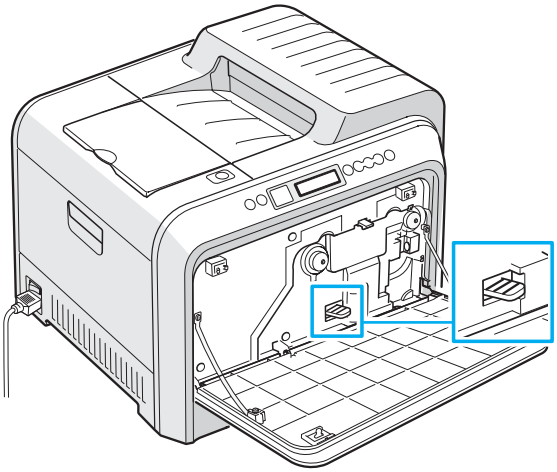

7 Holding the end of the cleaner, slide it in and out several times.

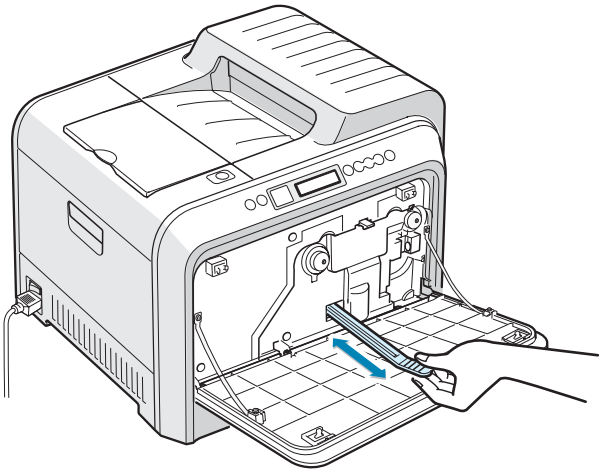

8 Insert the lower of the new container into place and then push it to make sure that it is seated in place.

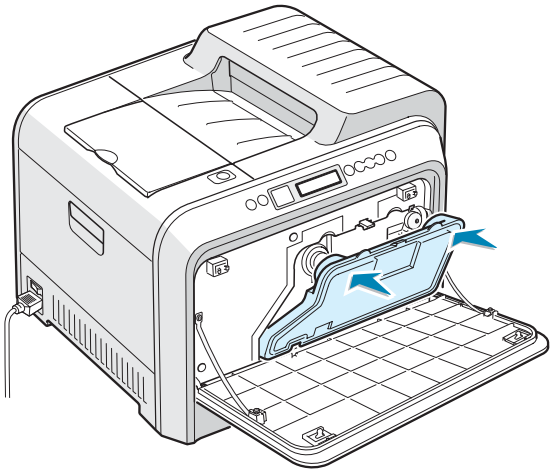

9 Make sure that the lock lever latches the container.

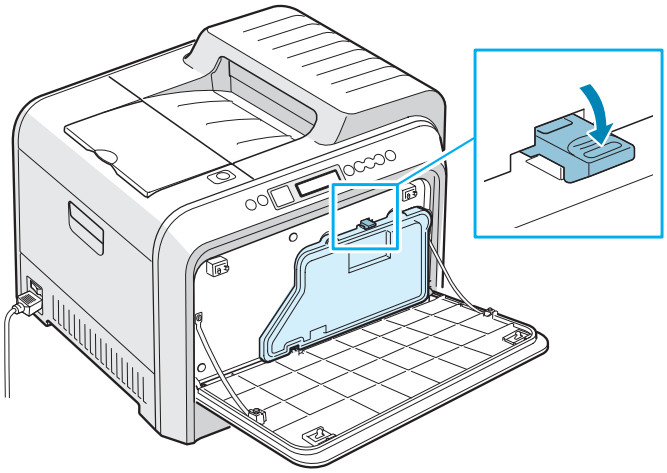

10 Close the front cover. Make sure that the cover is securely latched.

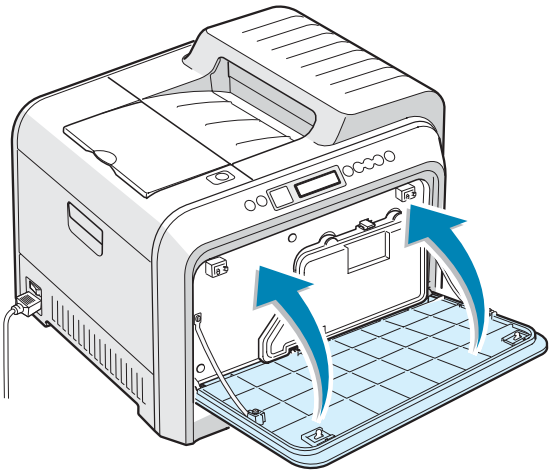

Replacing the Drum Cartridge

The life of the drum cartridge is approximately 50,000 images. Replace the drum cartridge when the printer control panel displays 'Replace Drum Cartridge'.

1 Turn the printer off.

2 Using the handle, open the left cover completely.

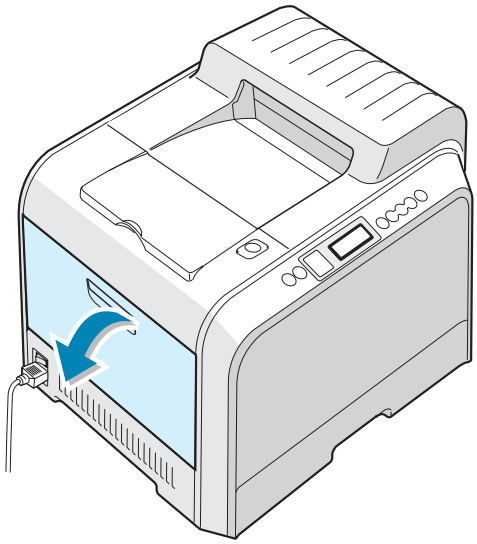

CAUTION: If the left cover is not completely open, the top cover release button does not press.

3 Press the top cover release button to unlatch the top cover and open it all the way.

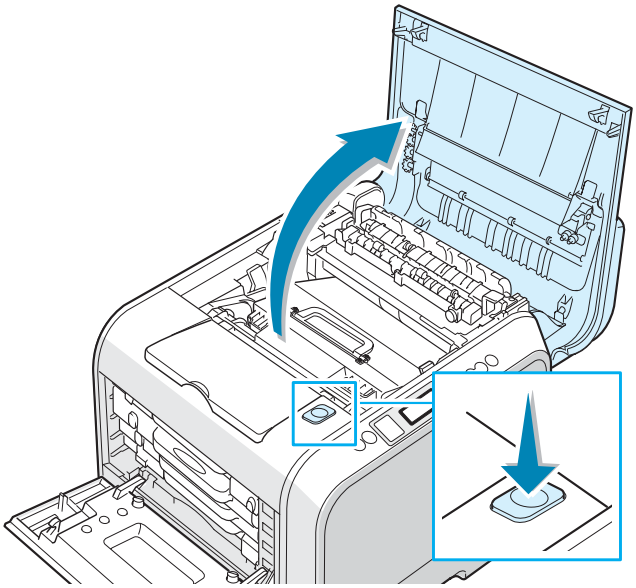

4 Pull the lock levers on each side towards you, as shown below, to release the image transfer unit.

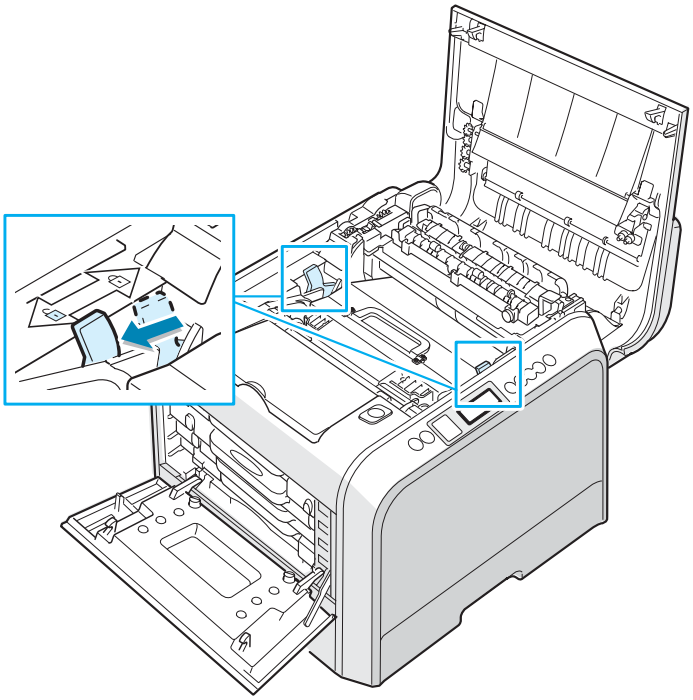

5 Using the handle, lift the image transfer unit out of the printer by lightly pulling it towards the left of the machine. Set it on a clean flat surface.

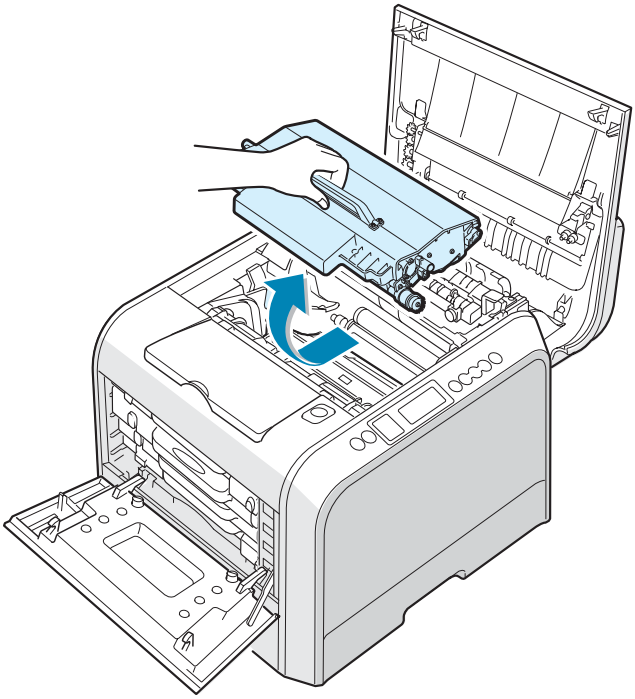

6 Lift the handle of the used drum cartridge and use it to pull the drum cartridge out of the printer.

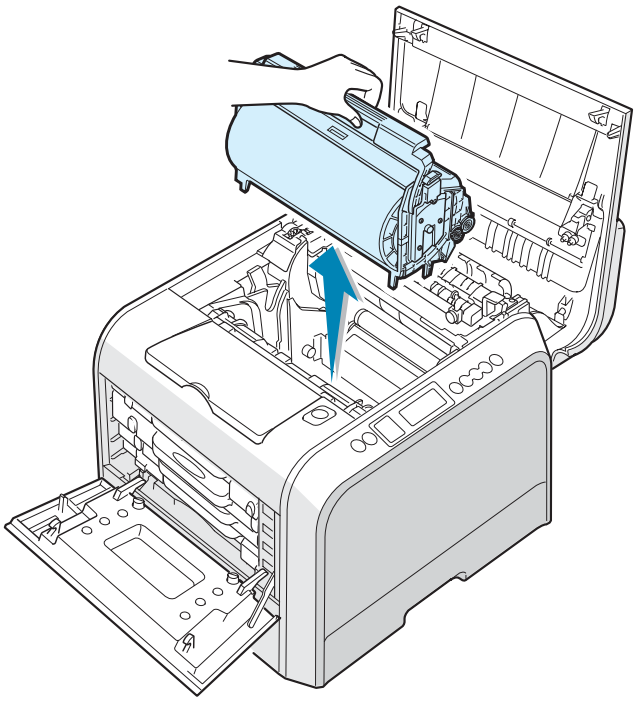

7 Take a new drum cartridge out of the package using the handle.

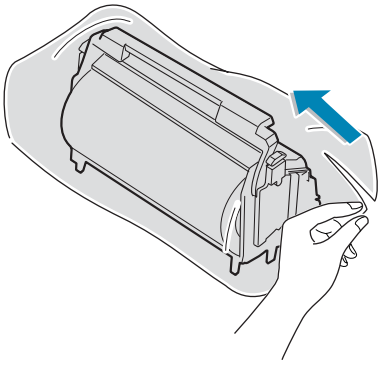

8 Remove the paper covering the drum cartridge by removing the tape under the handle of the drum cartridge.

CAUTIONS:

- Don't use sharp objects, such as a knife or scissors, to open the drum cartridge package. You could damage the surface of the drum.
- To prevent damage, do not expose the drum cartridge to light for more than a few minutes. Cover it with black paper, if necessary.
- Do not touch the surface of the green roller on the drum cartridge or print quality problems can occur.

9 Locate the drum cartridge slots inside the printer, one on each side.

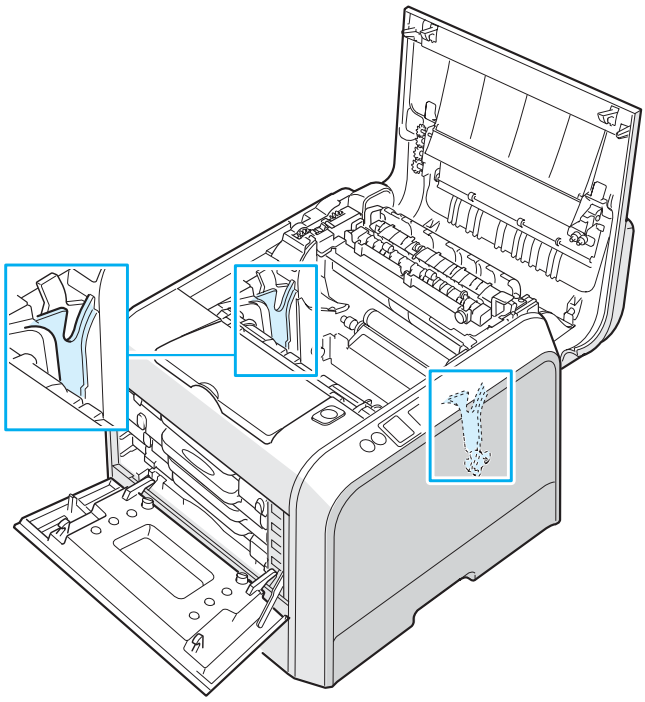

10 Hold the handle of the new drum cartridge with the green roller facing you. Then align the drum cartridge with the slots in your printer.

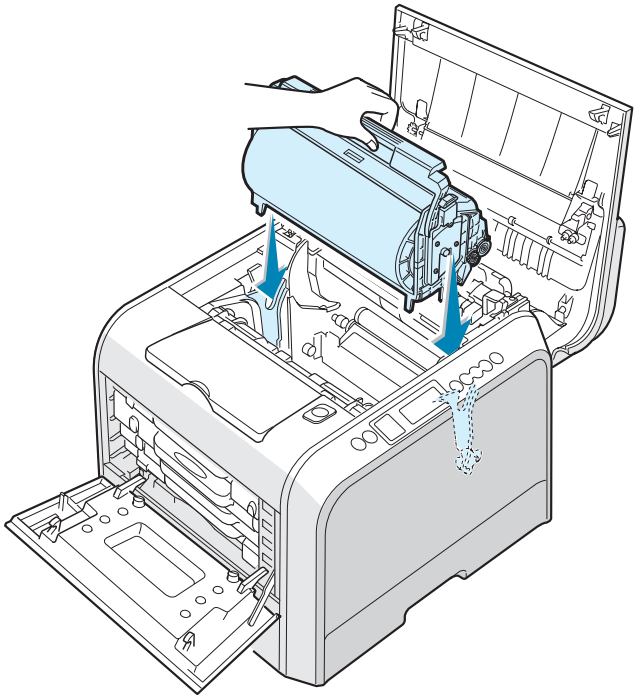

CAUTION: Insert the drum cartridge carefully so as not to scratch and damage the surface of the green roller.

11 Slide the new drum cartridge down into the printer until it latches into place and fold the handle down.

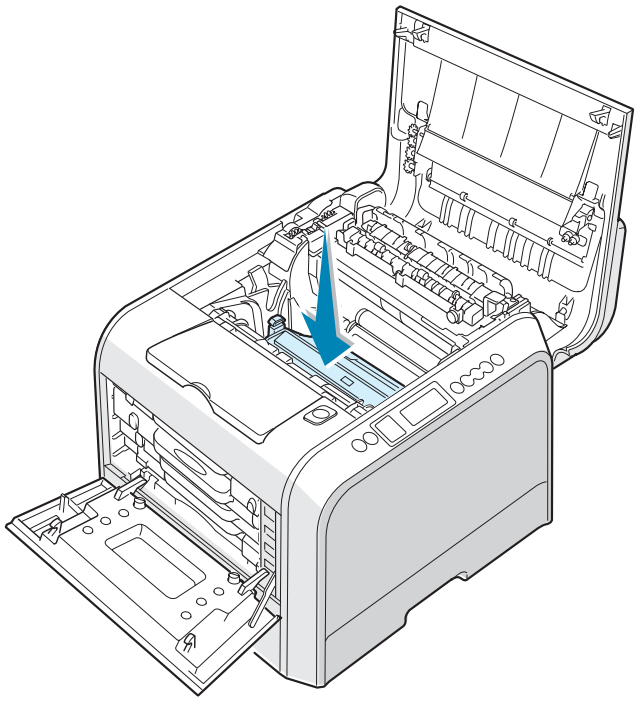

12 To replace the image transfer unit, hold its handle and then align it with the slots inside your printer, on each side.

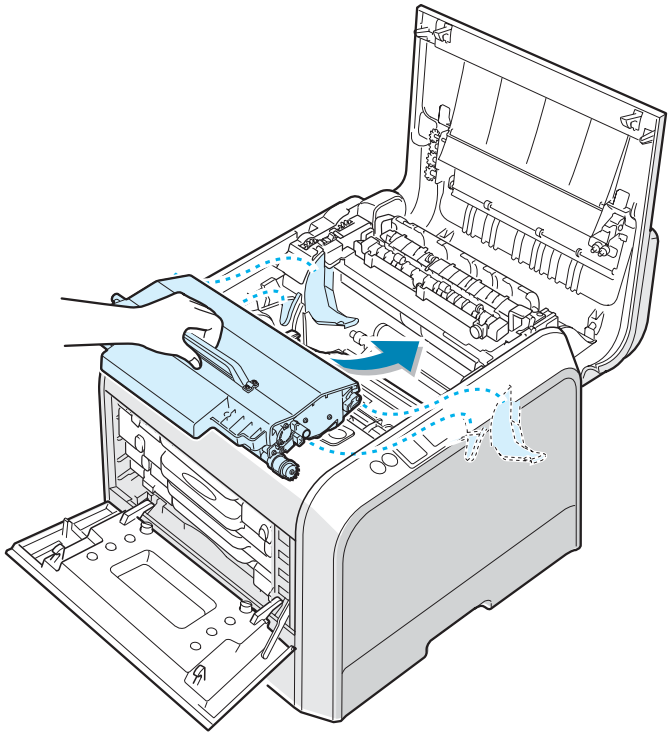

NOTE: Do not turn the transfer unit over. If you do this, the toner may spill.

13 Slide the image transfer unit down into the printer and press it firmly into place.

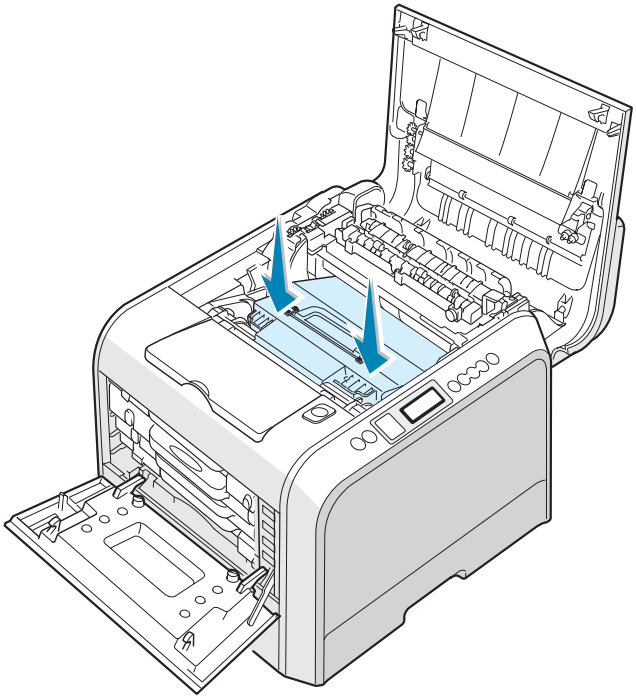

14 Firmly push the lock levers on each side away from you, as shown below, to lock the image transfer unit into place.

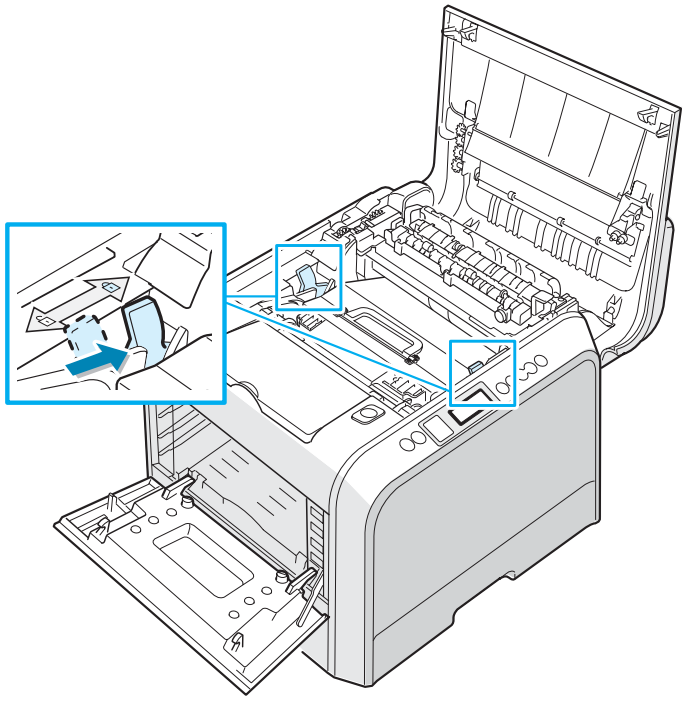

15 After making sure that the left cover is open, close the top cover. Make sure that it is securely latched.

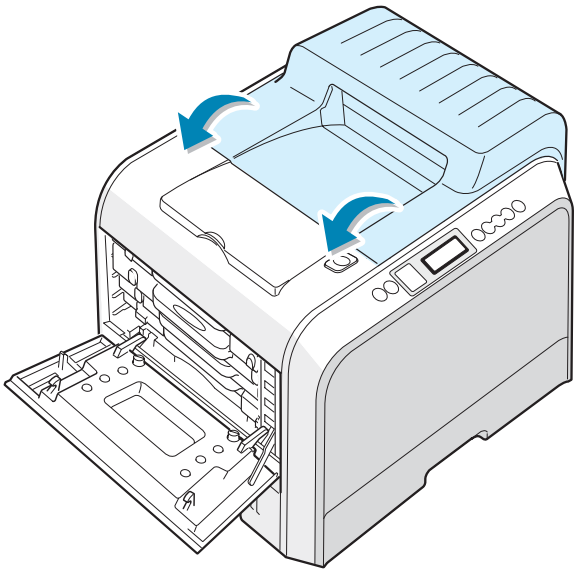

CAUTION: Do not try to close the top cover with the left cover closed. This may cause damage to the machine.

16 Close the left cover firmly.

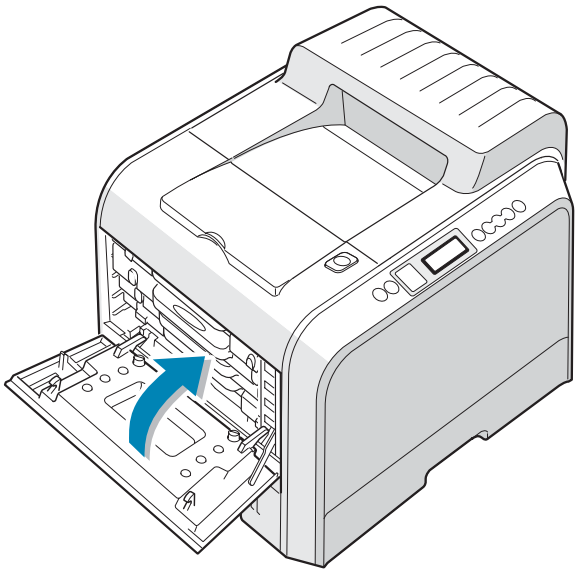

17 Open the front cover and clean the LSU. For details, see page 6.27.

18 Turn the printer on.

19 Press the **Menu** button ( ) on the control panel until you see 'Setup' on the bottom line of the display.

20 Press the **Enter** button ( ) to access the menu.

21 Press the scroll button (or) until 'Maintenance' displays on the bottom line and press the **Enter** button ( ).

22 Press the scroll button (or) to until 'Check Others' displays on the bottom line and press the **Enter** button ( ).

23 Press the **Enter** button ( ) when the first menu item, 'Drum' displays on the bottom line.

24 Press the scroll button (or) to display 'Reset' and press the **Enter** button ( ).

25 'Reset Now' appears on the bottom line of the display. The image counts of the drum cartridge are set to zero.

Replacing the Image Transfer Unit

The life of the image transfer unit is approximately 50,000 images. Replace the image transfer unit when the control panel displays 'Replace Image Transfer'.

To replace the image transfer unit:

1 Turn the printer off.

2 Using the handle, open the left cover completely.

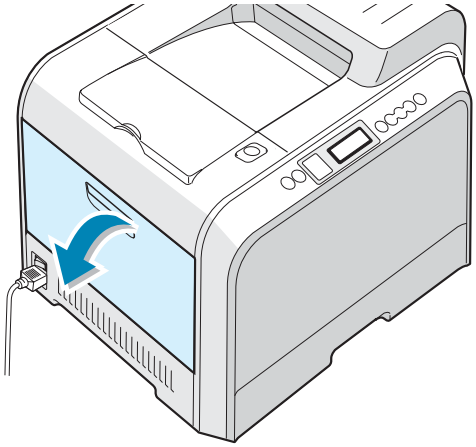

CAUTION: If the left cover is not completely open, the top cover release button does not press.

3 Press the top cover release button to unlatch the top cover and open it all the way.

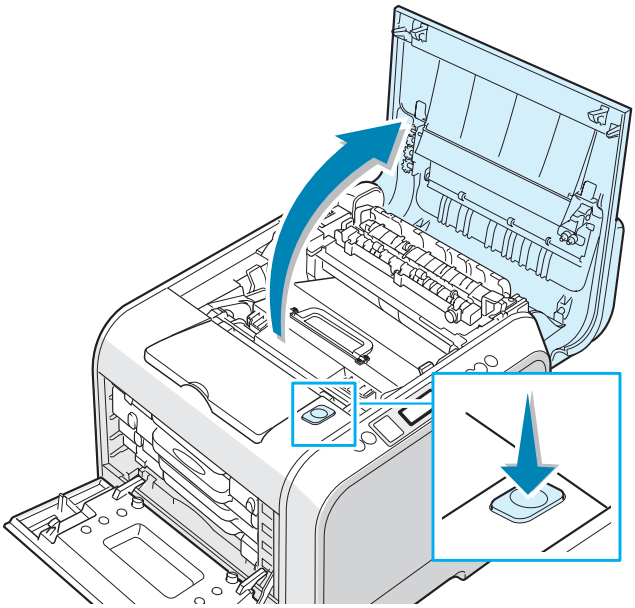

4 Pull the lock levers on each side towards you, as shown below, to release the image transfer unit.

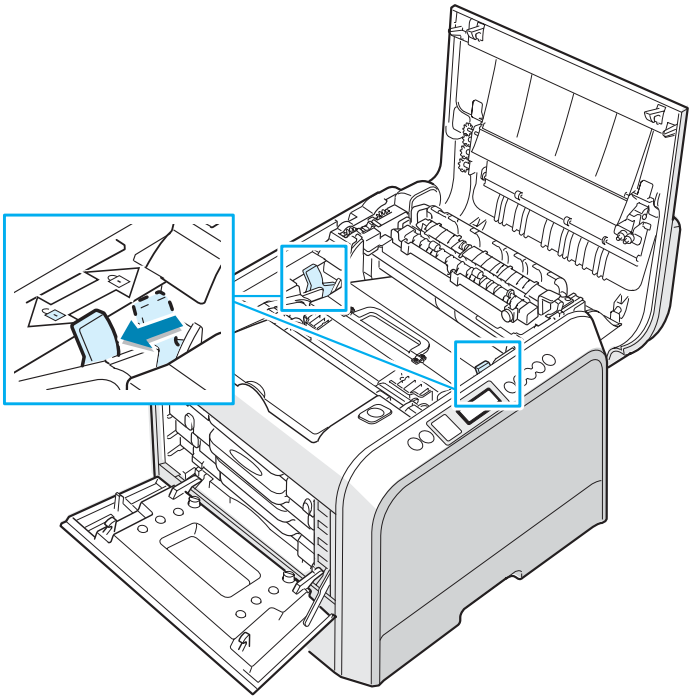

5 Using the handle, lift the used image transfer unit out of the printer by lightly pulling it towards the left of the machine.

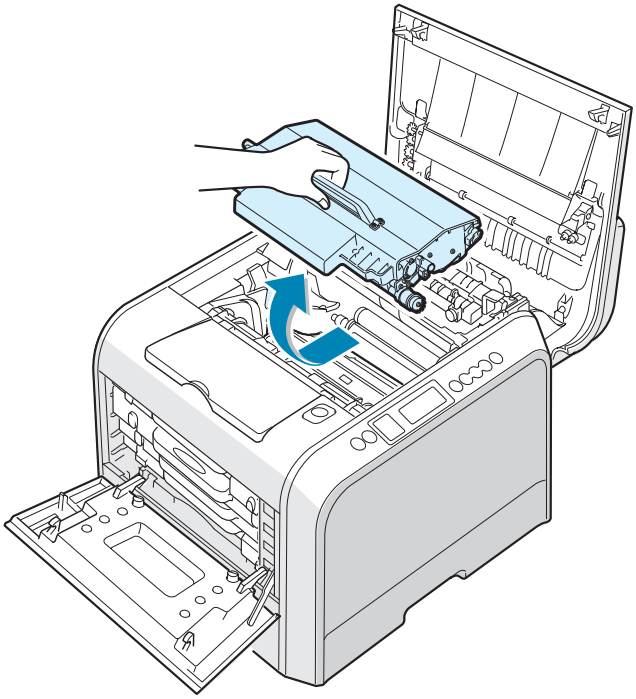

6 Take a new image transfer unit out of the package.

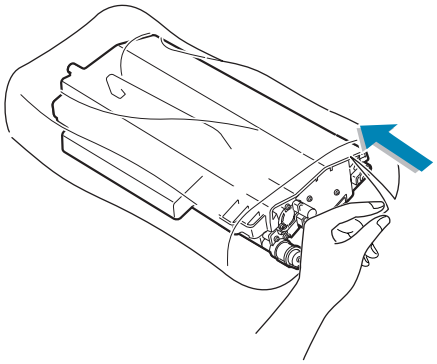

7 Remove the paper covering the image transfer unit by removing the tape under the handle of the image transfer unit.

CAUTION: Don't use sharp objects, such as a knife or scissors, to open the image transfer unit package. You could damage the surface of the image transfer.

8 Locate the image transfer unit slots inside the printer, one on each side.

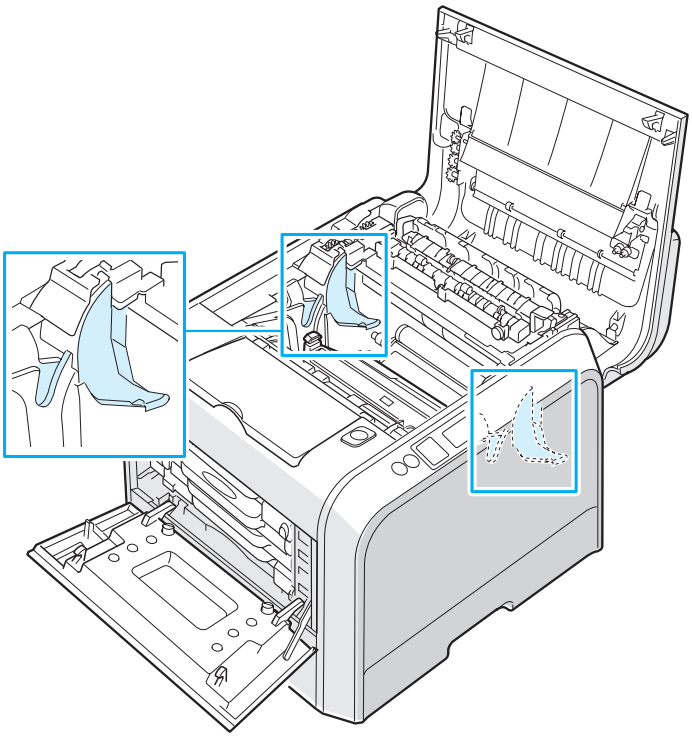

CAUTION: To prevent damage, do not expose the drum cartridge to light for more than a few minutes.

9 Hold the handle on the new image transfer unit and then align it with the slots inside your printer, on each side.

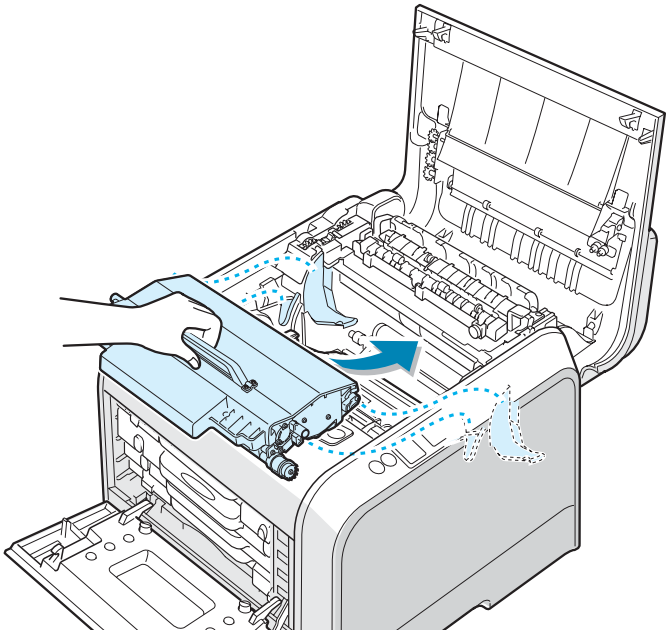

NOTE: Do not turn the transfer unit over. If you do this, the toner may spill.

10 Slide the new image transfer unit down into the printer and press it firmly into place.

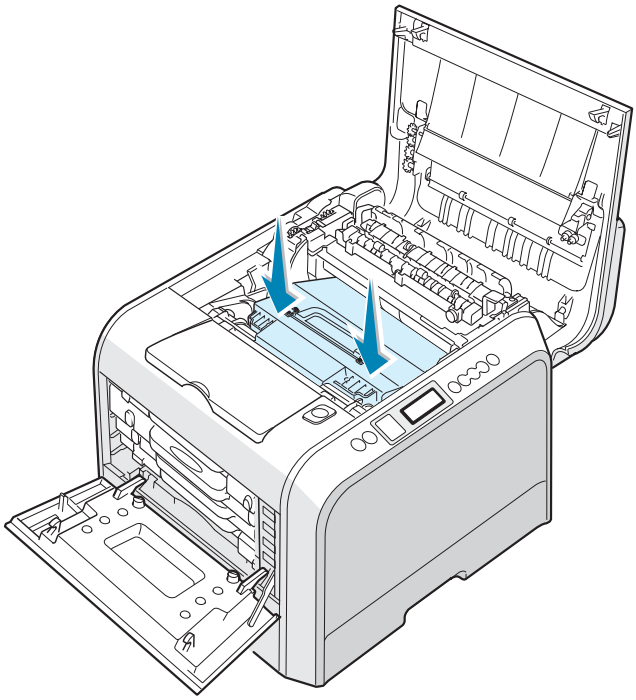

11 Firmly push the lock levers on each side away from you, as shown below, to lock the image transfer unit into place.

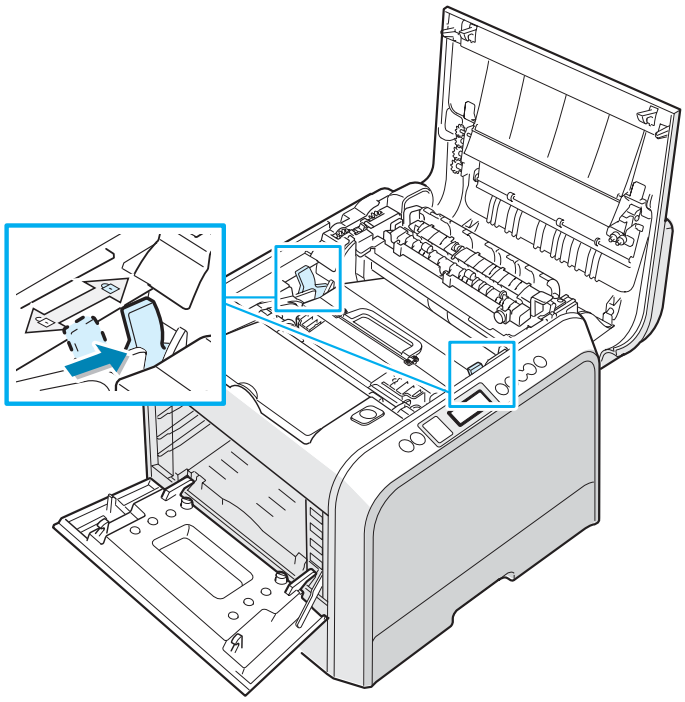

12 After making sure that the left cover is open, close the top cover. Make sure that it is securely latched.

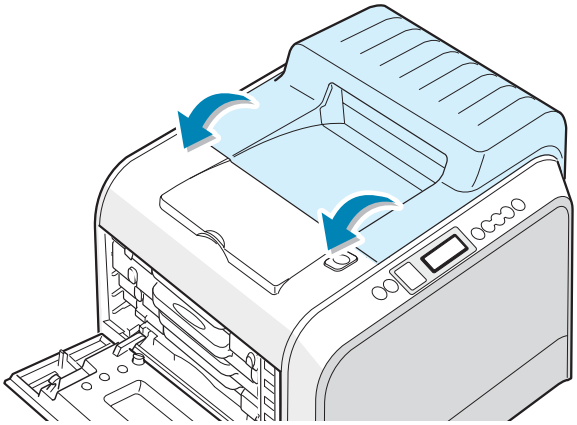

CAUTION: Do not try to close the top cover with the left cover closed. This may cause damage to the machine.

13 Close the left cover firmly.

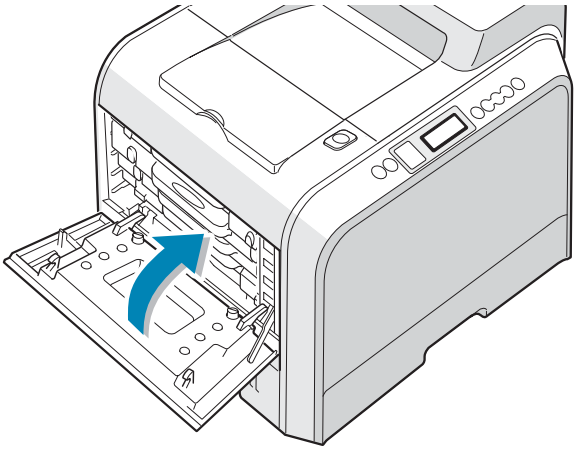

14 Open the front cover and clean the LSU. For details, see page 6.27.

15 Turn the printer on.

16 Press the **Menu** button ( ) on the control panel until you see 'Setup' on the bottom line of the display.

17 Press the **Enter** button ( ) to access the menu.

18 Press the scroll button (or) until 'Maintenance' displays on the bottom line and press the **Enter** button ( ).

19 Press the scroll button (or) to until 'Check Others' displays on the bottom line and press the **Enter** button ( ).

20 Press the scroll button (or) to display 'Transfer' on the bottom line and press the **Enter** button ( ).

21 Press the scroll button (or) to display 'Reset' and press the **Enter** button ( ).

22 'Reset Now' appears on the bottom line of the display. The image counts of the image transfer unit are set to zero.

Cleaning the Printer

During the printing process, particles of paper, toner and dust can accumulate inside the printer. Over time, this build-up can cause print-quality problems such as toner specks or smearing. Your printer has a cleaning mode that can correct and prevent these types of problems.

Cleaning the Outside of the Printer

Clean the cabinet of the printer with a soft, lint-free cloth. You can dampen the cloth slightly with water, but be careful not to be let any water drip onto the printer or inside of it.

NOTE: While cleaning the inside of the printer, be careful not to touch the transfer roller (located underneath the toner cartridge). Oil from your fingers can cause print quality problems.

CAUTION: Cleaning the cabinet of the printer with cleaners containing large amounts of alcohol, solvent or other strong substances can discolor or crack the cabinet.

6

Cleaning the LSU Inside the Printer

NOTE: Clean the LSU when you remove the particles of paper, toner and dust inside the printer. You should also clean it after installing and replacing the supplies.

1 Turn the printer off.

2 To unlatch the front cover, quickly press and release it using the depressions at the top.

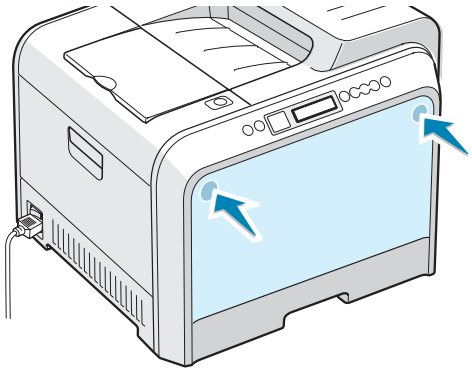

3 Push the lock lever up and pull the waste toner container out.

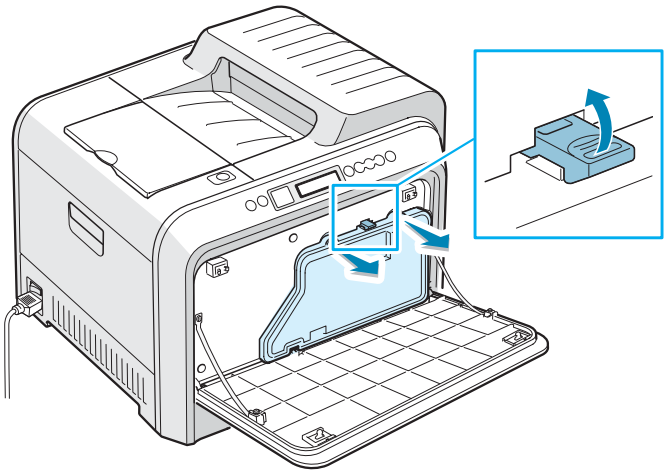

NOTE: Make sure that you lay the waste toner container on a flat surface so that the toner does not spill.

4 Locate the supplied LSU cleaner on the bottom.

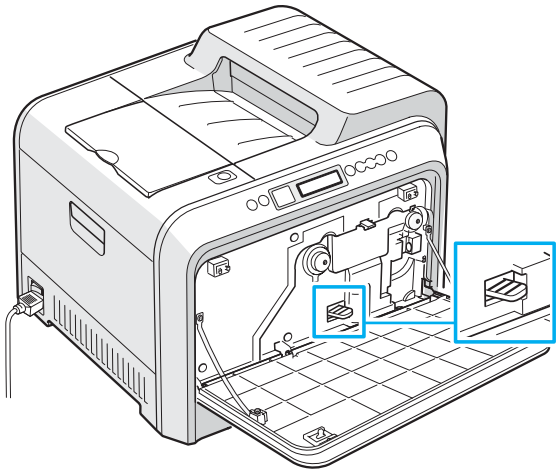

5 Holding the end of the cleaner, slide it in and out several times.

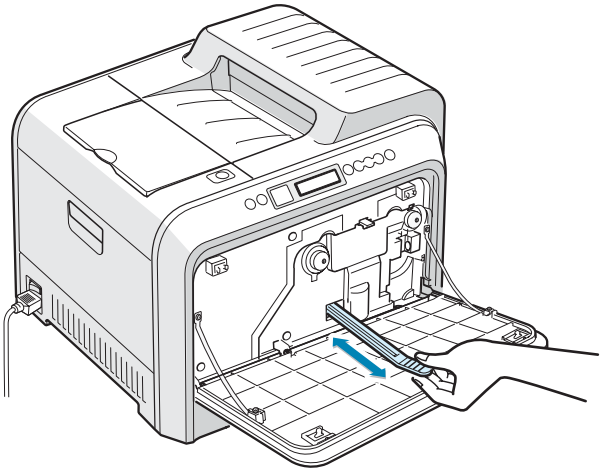

6 Slide the cleaner back into place and then replace the lower of the waste toner container and then push it to make sure that it is seated in place.

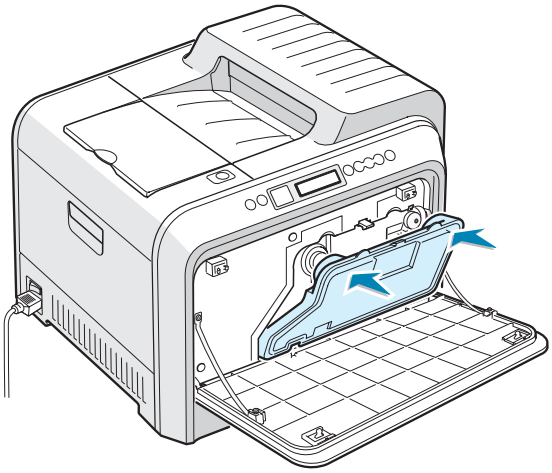

7 Make sure that the lock lever latches the container.

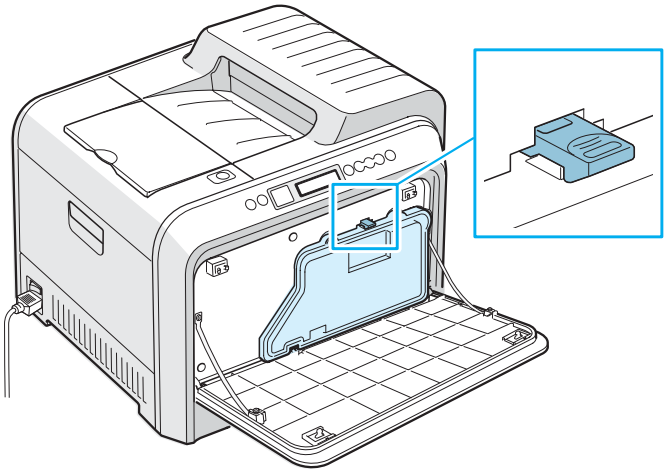

8 Close the front cover. Make sure that it is securely latched and then turn the printer on.

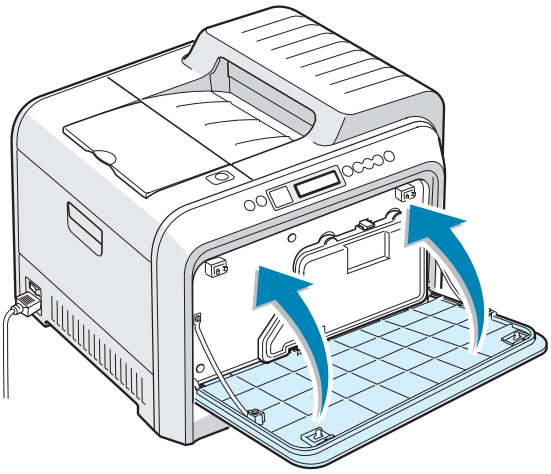

Cleaning the Inside of the Printer

NOTE: While cleaning the inside of the printer, be careful not to touch the transfer roller located underneath the toner cartridge. Oil from your fingers can cause print quality problems.

1 Turn the printer off and unplug the power cord, then wait a few minutes for the printer to cool.

2 Using the handle, open the left cover completely.

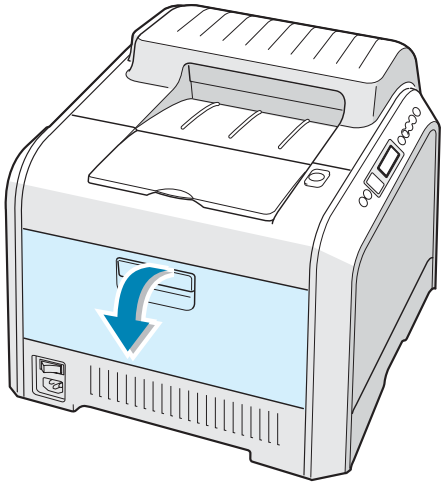

CAUTION: If the left cover is not completely open, the top cover release button does not press.

3 Pull the handle lightly first, and then holding the toner cartridges, remove them from the printer. Set them on a clean flat surface.

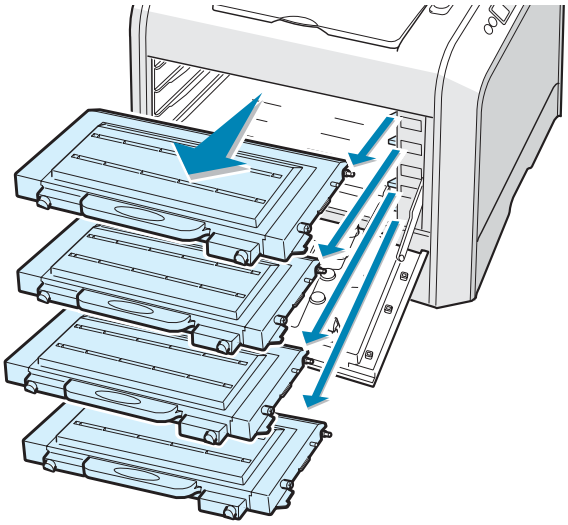

4 Press the top cover release button to unlatch the top cover and open it all the way.

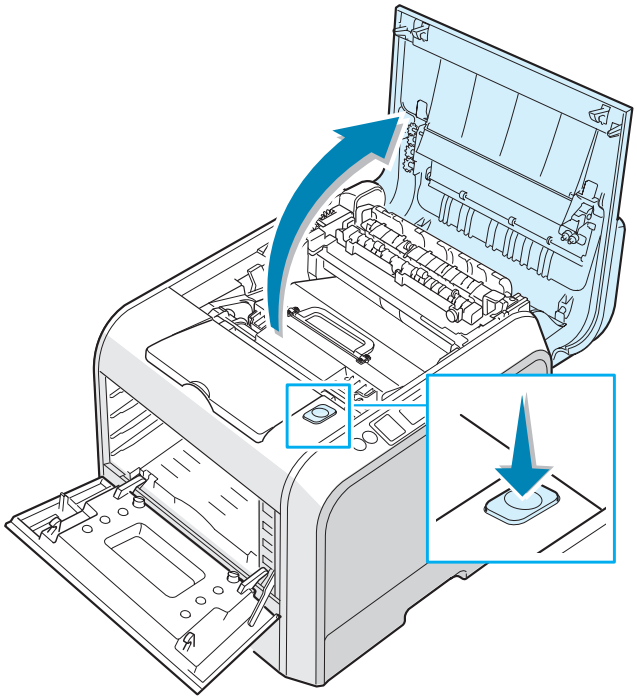

CAUTION: If you open the left cover for a long time, the drum cartridge can be exposed to light. This causes damage to the drum cartridge.

5 Pull the lock levers on each side towards you, as shown below, to release the image transfer unit.

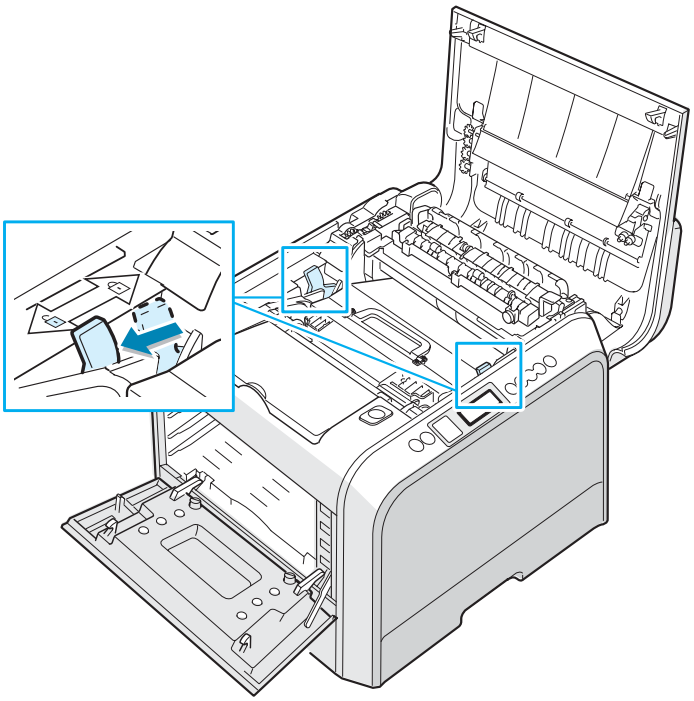

6 Using the handle, lift the image transfer unit out of the printer by lightly pulling it towards the left of the machine. Set it on a clean flat surface.

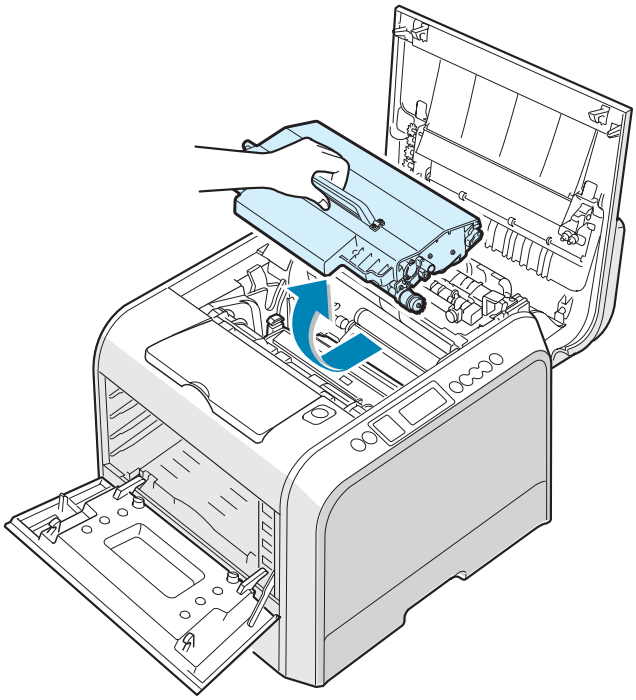

7 Lift the handle of the drum cartridge and use it to pull the drum cartridge out of the printer. Set it on a clean flat surface.

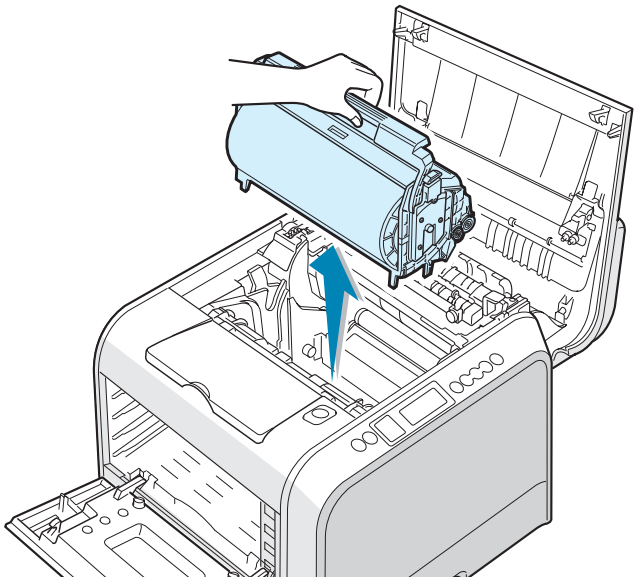

CAUTIONS:

- To prevent damage, do not expose the drum cartridge to light for more than a few minutes. Cover it with black paper, if necessary.
- Do not touch the surface of the green roller on the drum cartridge or print quality problems can occur.

8 Look inside the printer. Remove any dust, paper particles, and spilled toner with a damp, soft lint-free cloth or small vacuum cleaner.

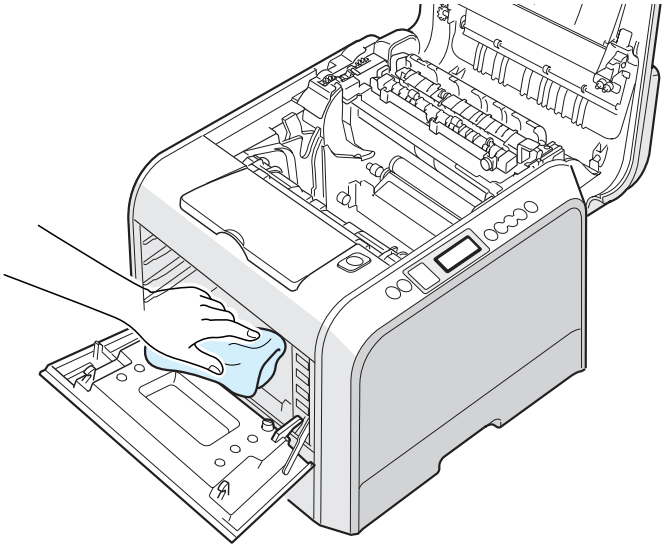

9 Insert the drum cartridge back into the printer. Make sure you hear it click, and then fold the handle down. For details, see steps 9 to 10 on page 6.16.

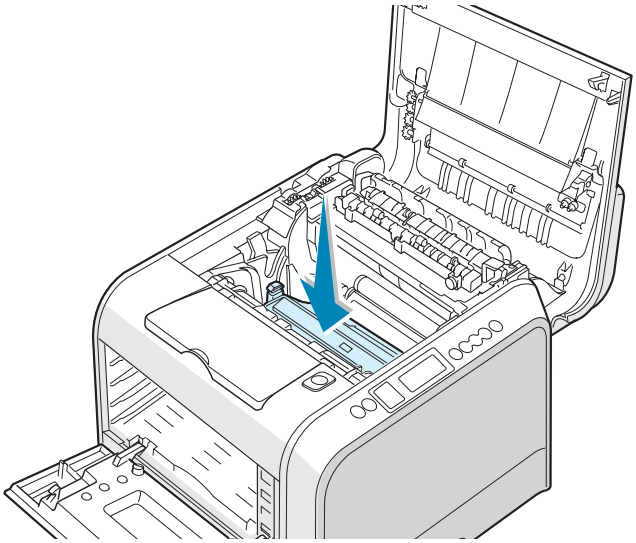

CAUTION: Replace the drum cartridge carefully so as not to scratch and damage the surface of the green roller on the drum cartridge.

10 Insert the image transfer unit back into the printer. Press it firmly to make sure it fits into place. For details, see steps 7 and 8 on page 6.23.

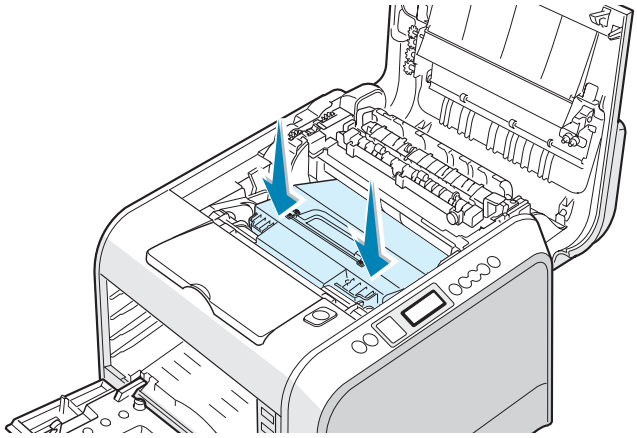

NOTE: Do not turn the transfer unit over. If you do this, the toner may spill.

11 Firmly push the lock levers on each side away from you, as shown below, to lock the image transfer unit into place.

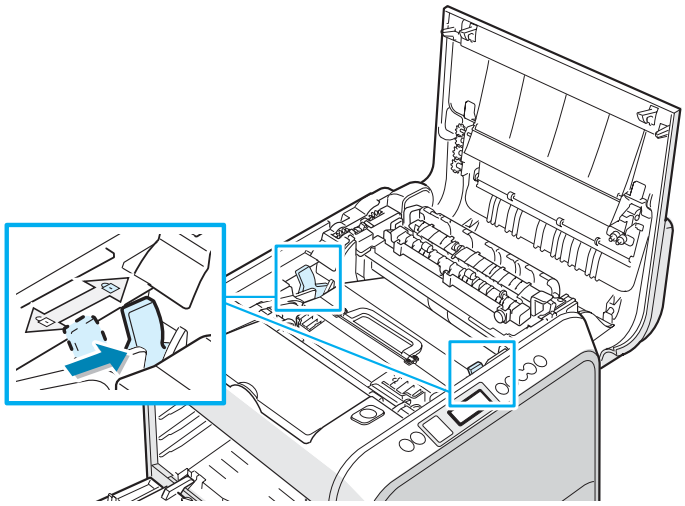

12 After making sure that the left cover is open, close the top cover. Make sure that it is securely latched.

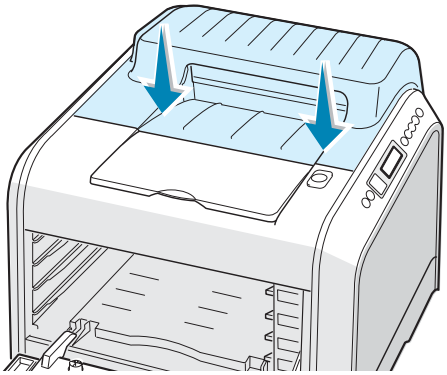

13 Look inside the printer on the right and then locate the color of the toner cartridges that matches the color of the slot.

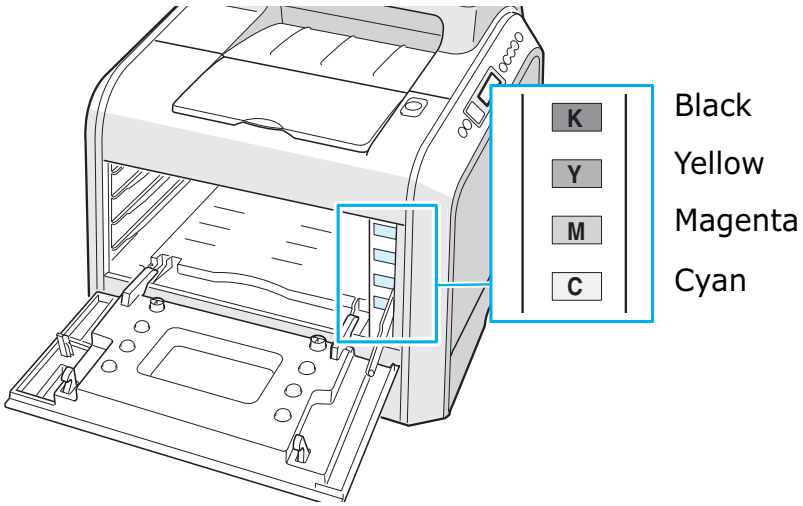

14 Holding each toner cartridge, insert them into their corresponding positions in order of Cyan, Magenta, Yellow and then Black.

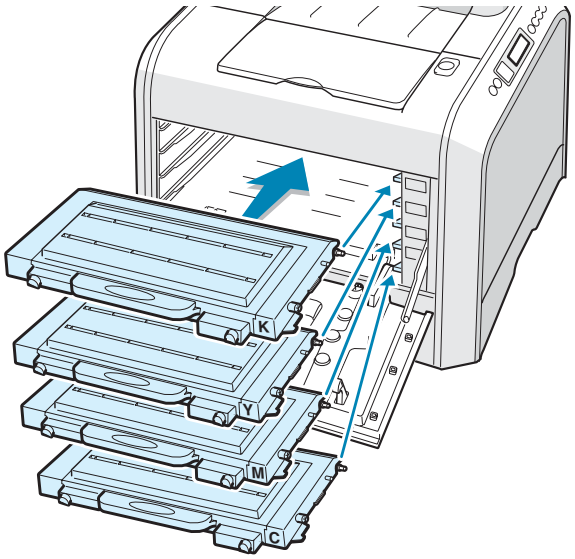

6

15 Close the left cover. Make sure that it is securely latched.

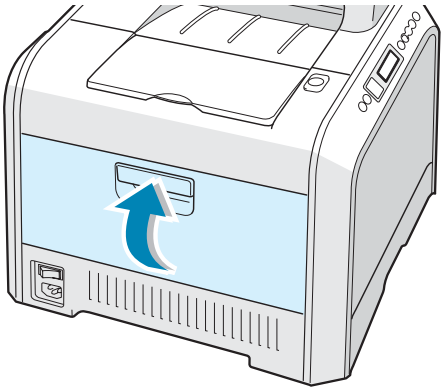

16 Plug the power cord in and turn the printer on.

Consumables and Replacement Part

From time to time, you will need to replace the toner cartridge, roller, and fuser unit to maintain top performance and avoid print quality problems and paper feed problems resulting from worn parts.

The following items should be replaced after you have printed a specified number of pages. See the table below.

Item(s)	Yield (Average)
Pick-up roller	100,000 pages
Transfer 2 roller	50,000 pages
Fuser unit	10,000 (mono) pages 50,000 (color) pages

To purchase the consumables and replacement parts, contact your Samsung dealer or the retailer where you bought your machine. We strongly recommend that items be installed by a trained service professional, except for the toner cartridge.

7 SOLVING PROBLEMS

This chapter provides helpful information for what to do if you encounter an error while using your printer.

This chapter includes:

- **Troubleshooting Checklist**
- **Solving General Printing Problems**
- **Clearing Paper Jams**
- **Solving Print Quality Problems**
- **Understanding Display Messages**
- **Common Windows Problems**
- **Common Macintosh Problems**
- **Common Linux Problems**

Troubleshooting Checklist

If the printer is not working properly, consult the following checklist. If the printer does not pass a step, follow the corresponding troubleshooting suggestions.

Check	Solution
Make sure that the **On-Line/Continue** button on the control panel is green and "Ready" is shown on the display.	• If the button backlight is off, check the power cord connection. Check the power switch. Check the power source by plugging it into another outlet. • If the button backlight is orange, check the display message and go to "Understanding Display Messages" on page 7.24.
Print a demo page to verify that the printer is feeding paper correctly. See the Setup Guide.	• If a demo page does not print, check the paper supply in the paper tray. • If the paper jams in the printer, go to "Clearing Paper Jams" on page 7.6. • If an error message appears on the display, go to "Understanding Display Messages" on page 7.24.
Check the demo page to see if it is printed correctly.	If there is a print quality problem, go to "Solving Print Quality Problems" on page 7.20.
Print a short document from a software application to verify that the computer and printer are connected and are communicating correctly.	• If the page does not print, check the cable connection between the printer and the computer. • Check the print queue or print spooler to see if the printer has been paused. • Check the software application to ensure that you are using the proper printer driver and communication port. If the page is interrupted during printing, go to "Solving General Printing Problems" on page 7.3.
If completing the checklist does not resolve the printer problem, check the following troubleshooting sections.	• See "Solving General Printing Problems" on page 7.3. • See "Understanding Display Messages" on page 7.24. • See "Common Windows Problems" on page 7.28. • See "Common Macintosh Problems" on page 7.29 • See "Common Linux Problems" on page 7.30.

Solving General Printing Problems

For problems with the operation of your printer, refer to the table for suggested solutions.

Problem	Possible Cause	Solution
The printer does not print.	The printer is not receiving power.	Check the power cord connections. Check the power switch and the power source.
	The printer is not selected as the default printer.	Select **Samsung CLP-500 Series** as your default printer.
	Check the printer for the following: • The printer cover is not closed. • Paper is jammed. • No paper is loaded. • The toner cartridge is not installed.	Solve the problems.
	The printer may be in manual feed mode and out of paper.	Check the display message, add paper to the Multi-purpose Tray and press the **On-Line/Continue** button on the printer's control panel.
	The connection cable between the computer and the printer is not connected properly.	Disconnect the printer cable and reconnect it.
	The connection cable between the computer and the printer is defective.	If possible, attach the cable to another computer that is working properly and print a document. You can also try using a different printer cable.
	The port setting is incorrect.	Check the Windows printer setting to make sure that the print job is sent to the correct port, for example, LPT1. If the computer has more than one port, make sure that the printer is attached to the correct one.
	The printer may be configured incorrectly.	Check the printer properties to ensure that all of the print settings are correct.
	The printer driver may be incorrectly installed.	Reinstall the printer driver; refer to the Setup Guide. Try printing a demo page.
	The printer is malfunctioning.	Check the display message on the control panel to determine if the printer is indicating a system error.

Problem	Possible Cause	Solution
Printer selects print materials from the wrong paper source.	The paper source selection in the printer properties may be incorrect.	For many software applications, the paper source selection is found under the **Paper** tab within the printer properties. Select the correct paper source. See page 3.7.
Paper does not feed into the printer.	Paper has been loaded incorrectly.	Remove paper from the tray and reload it correctly.
	There is too much paper in the paper tray.	Remove excess paper from the tray.
	The paper is too thick.	Use only paper that meets the specifications required by the printer.
Print job is extremely slow.	The job may be very complex.	Reduce the complexity of the page or try adjusting the print quality settings. Your printer prints A4-size paper at 20 ppm for black, Letter-size paper at 21 ppm or A4/Letter-sized at 5 ppm for color.
	If using Windows 9x/Me, the Spooling Setting may be set incorrectly.	From the **Start** menu, choose **Settings** and **Printers**. Right-click the **Samsung CLP-500 Series** printer icon, choose **Properties**, click the **Details** tab, and then choose the **Spool Settings** button. Select the desired spool setting.
	The computer may have insufficient random-access memory (RAM).	Install more memory in your printer. See "Installing Printer Memory" on page D.2.
Half the page is blank.	The page orientation setting may be incorrect.	Change the page orientation in your application. See page 3.6.
	The paper size and the paper size settings do not match.	Ensure that the paper size in the printer driver settings matches the paper in the tray.
The paper keeps jamming.	There is too much paper in the paper tray.	Remove excess paper from the tray. If printing on special materials, use the Multi-purpose Tray.
	An incorrect type of paper is being used.	Use only paper that meets the specifications required by the printer. If printing on special materials, use the Multi-purpose Tray.
	There may be debris inside the machine.	Open the top cover and remove the debris.

Problem	Possible Cause	Solution
The printer prints, but the text is wrong, garbled, or incomplete.	The printer cable is loose or defective.	Disconnect the printer cable and reconnect. Try a print job that you have already printed successfully. If possible, attach the cable and printer to another computer and try a print job that you know works. Finally, try a new printer cable.
	The wrong printer driver was selected.	Check the application's printer selection menu to ensure that your printer is selected.
	The software application is malfunctioning.	Try printing a job from another application.
	The operating system is malfunctioning.	Exit Windows and reboot the computer. Turn the printer off and then back on again.
Pages print, but are blank.	The toner cartridge is defective or out of toner.	Redistribute the toner. If necessary, see page 6.5. If necessary, replace the toner cartridge.
	The file may have blank pages.	Check the file to ensure that it does not contain blank pages.
	Some parts, such as the controller or the board, may be defective.	Contact a service representative.
The illustrations print incorrectly in Adobe Illustrator.	The setting in the software application is wrong.	Select **Download as Bit Image** in the **Advanced Options** window of the graphic properties. Print the document.

Clearing Paper Jams

The display on the control panel tells you where a paper jam occurs. Refer to the table below to locate the paper jam and to clear it:

Message	Location of Jam	Go to...
Jam0 In Tray1	In the paper feed area	below
Jam0 In Tray2	In the optional tray 2	page 7.8
Jam Inside Printer	Inside printer	page 7.9
Jam In Exit Area	In the paper exit area	page 7.10
Jam In Duplex Path	In the duplex area	page 7.13
Jam0 In MP Tray	In the multi-purpose tray	page 7.16

To resume printing after clearing paper jams, you must open and close the right cover.

In the Paper Feed Area

If paper is jammed in the paper feed area, 'Jam0 In Tray1' appears on the display.

1 Using the handle, open the right cover.

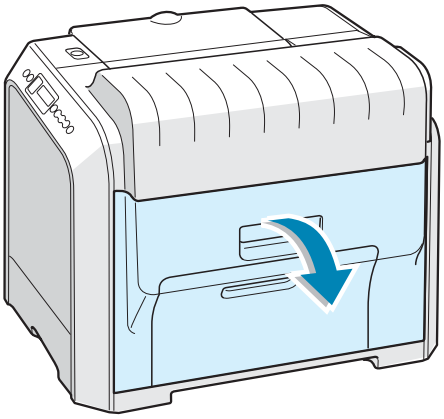

2 Carefully remove the misfed paper in the direction as shown.

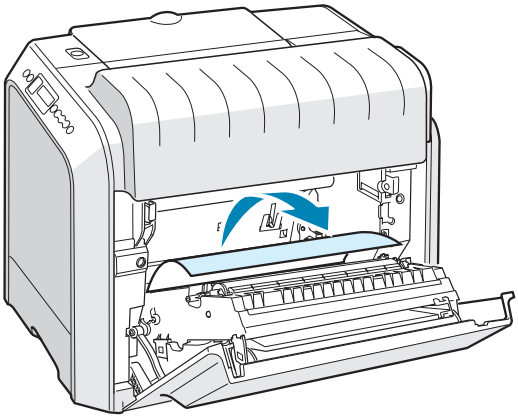

3 Close the right cover. The printer resumes printing.

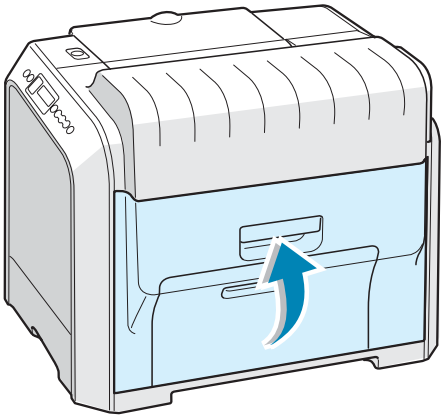

If there is any resistance, and the paper does not move immediately when you pull, stop pulling and go to step 4.

4 Pull the tray open. After you pull it all the way out, lift up the front part of the tray slightly to release the tray from the machine.

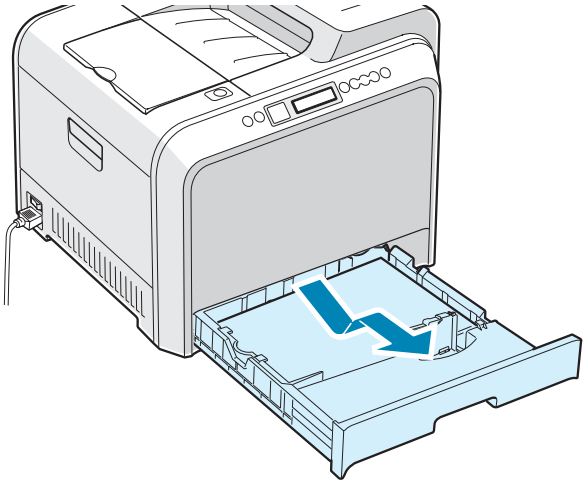

5 Remove the jammed paper by gently pulling it straight out.

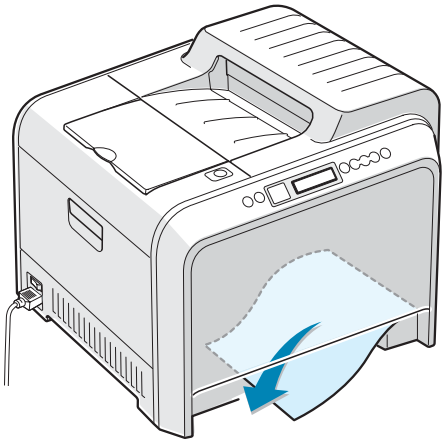

6 To replace the tray, lower the rear edge, align it to the slot and slide it into the printer.

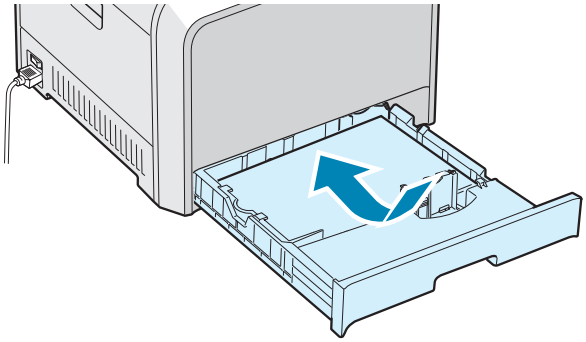

7 Close the right cover. The printer resumes printing.

In the Multi-purpose Tray

'Jam0 In MP Tray' appears on the display when you print using the Multi-purpose Tray and the printer detects either there is no paper or the paper is improperly loaded.

If the paper is not feeding properly, pull the paper out of the machine.

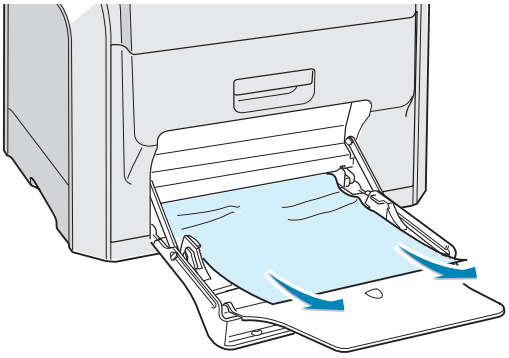

To resume printing, open and close the right cover.

Inside the Printer

If paper is jammed inside the printer, 'Jam Inside Printer' appears on the display.

1 Using the handle, open the right cover.

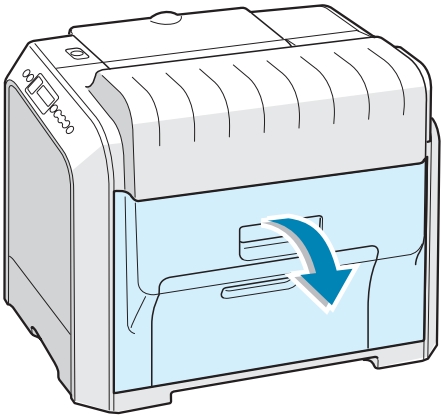

2 Remove the jammed paper, in the direction shown. To avoid the paper tearing, pull it out gently and slowly.

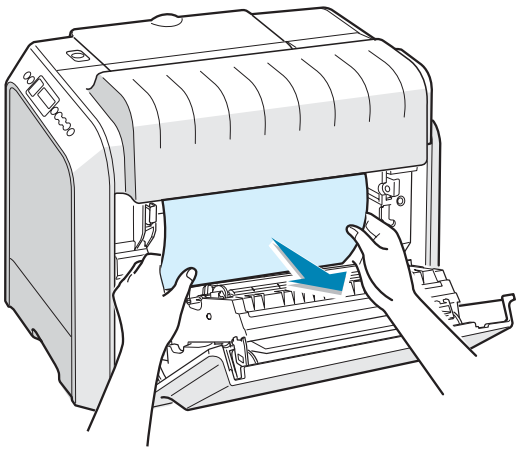

NOTE: If the paper tears, make sure that all of the paper fragments are removed from the printer.

3 Close the right cover. The printer resumes printing.

In the Paper Exit Area

If paper is jammed in the paper exit area, 'Jam In Exit Area' appears on the display.

1 If a long portion of the paper is visible, pull it straight out. If not, continue to step 2.

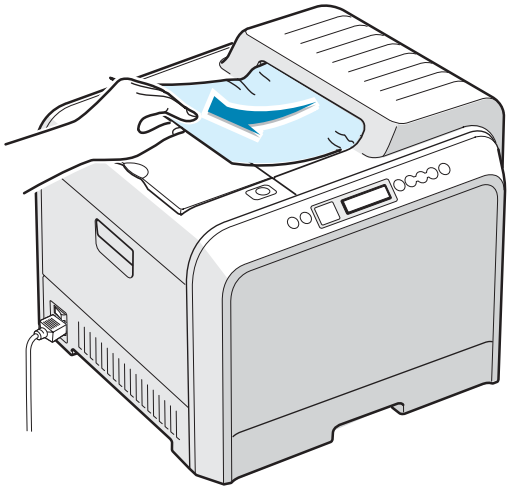

2 Using the handle, open the left cover completely.

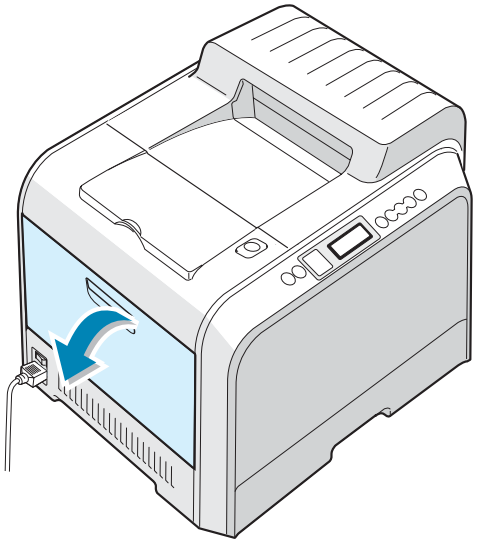

CAUTION: If the left cover is not completely open, the top cover release button does not press.

3 Press the top cover release button to unlatch the top cover and open it all the way.

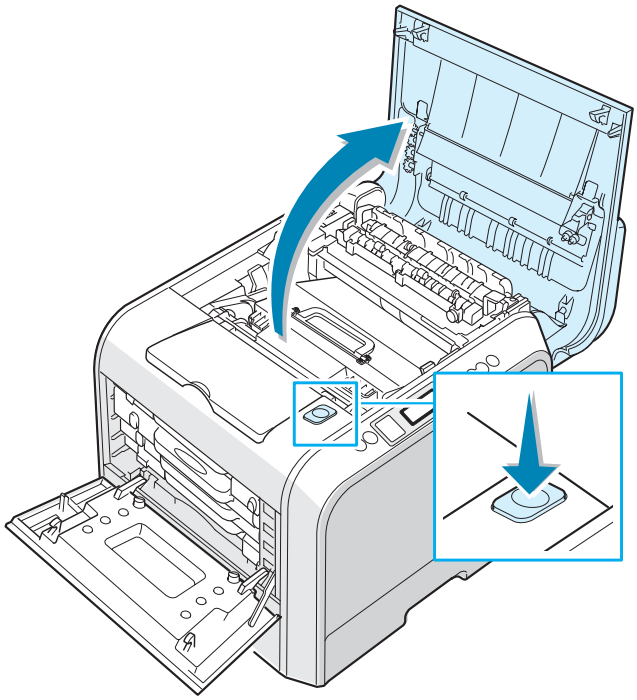

4 Carefully take the jammed paper out of the printer.

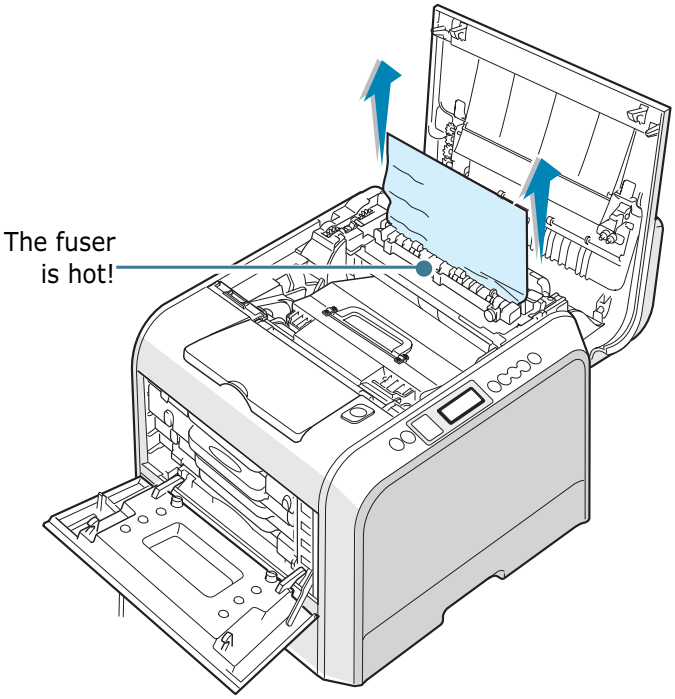

CAUTION: Do not touch the fuser. It is hot and could cause burns! The fuser's operating temperature is 180°C (356° F). Take care when removing paper from the machine.

5 After making sure that the left cover is open, close the top cover. Make sure that it is securely latched.

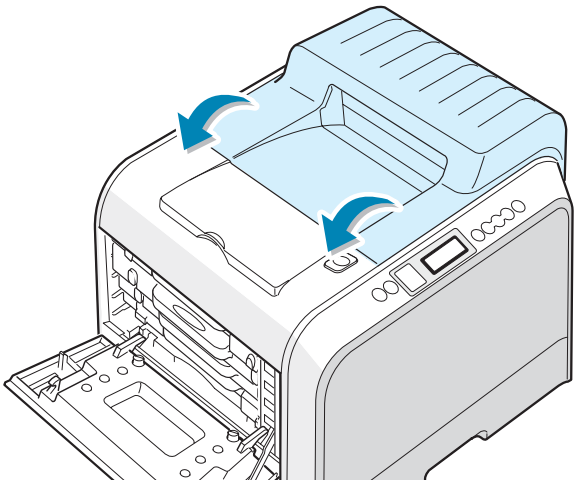

CAUTION: Do not try to close the top cover with the left cover closed. This may cause damage to the machine.

6 Close the left cover firmly.

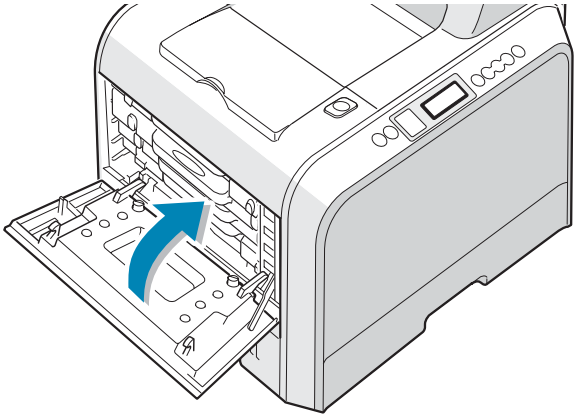

7 Open and close the right cover to resume printing.

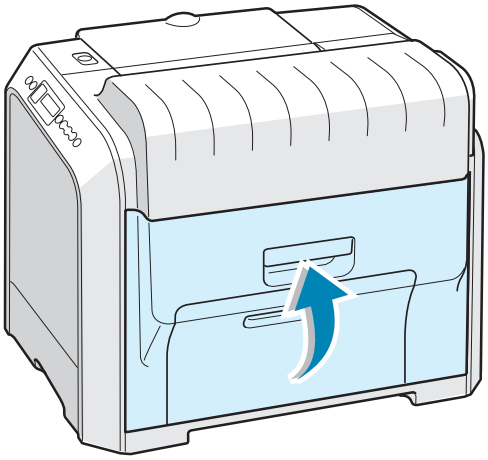

In the Duplex Area

If paper is jammed in the duplex area, 'Jam In Duplex Path' appears on the display.

1 Using the handle, open the right cover.

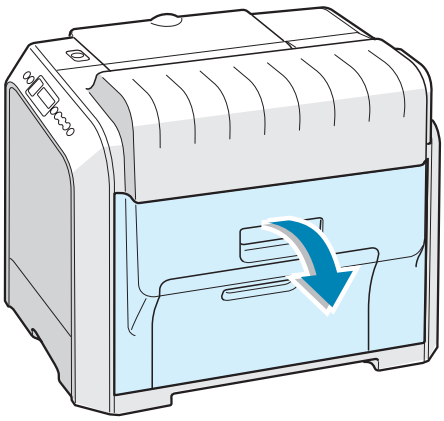

2 Locate the jammed paper, and then pull it out gently and slowly to avoid the paper tearing. Go to step 9.

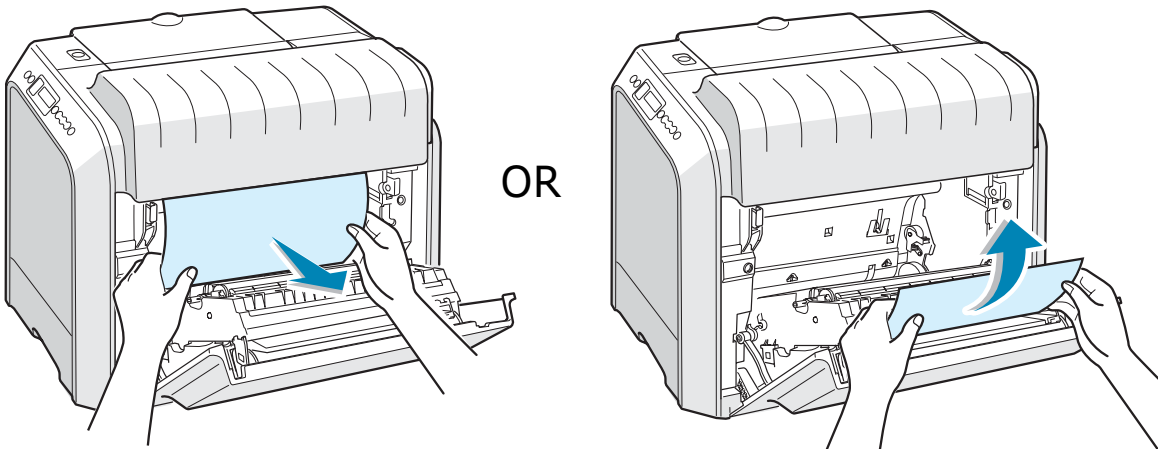

NOTE: If the paper tears, make sure that all of the paper fragments are removed from the printer.

3 If you cannot find the jammed paper or there is any resistance removing the paper, go to step 4.

4 Using the handle, open the left cover completely.

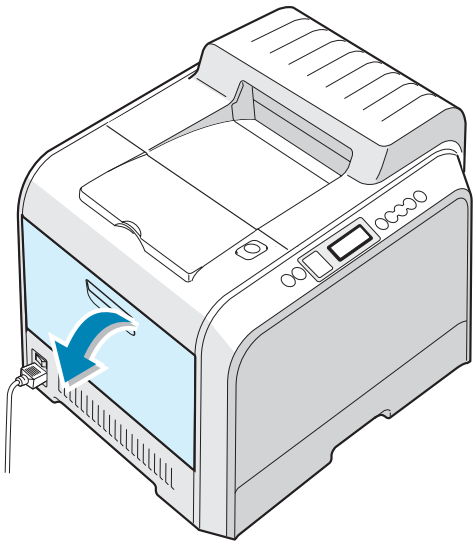

CAUTION: If the left cover is not completely open, the top cover release button does not press.

5 Press the top cover release button to unlatch the top cover and open it all the way.

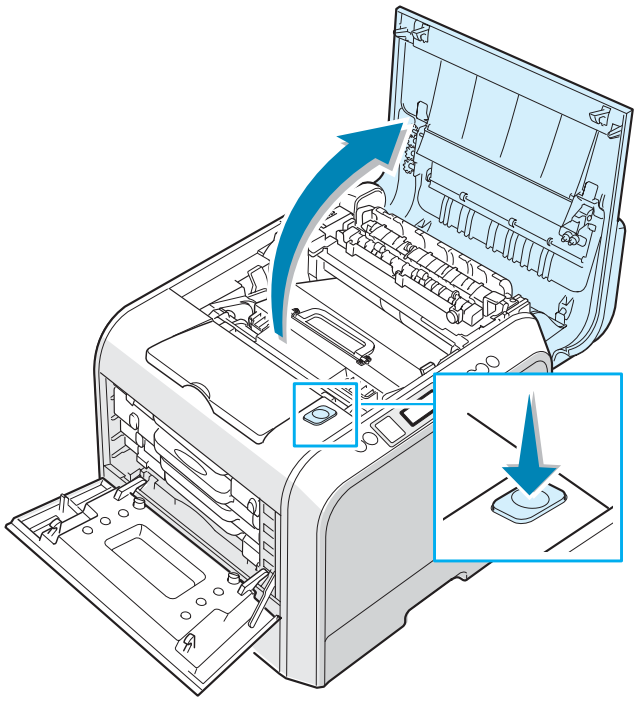

6 Locate the jammed paper, and then carefully take it out of the printer.

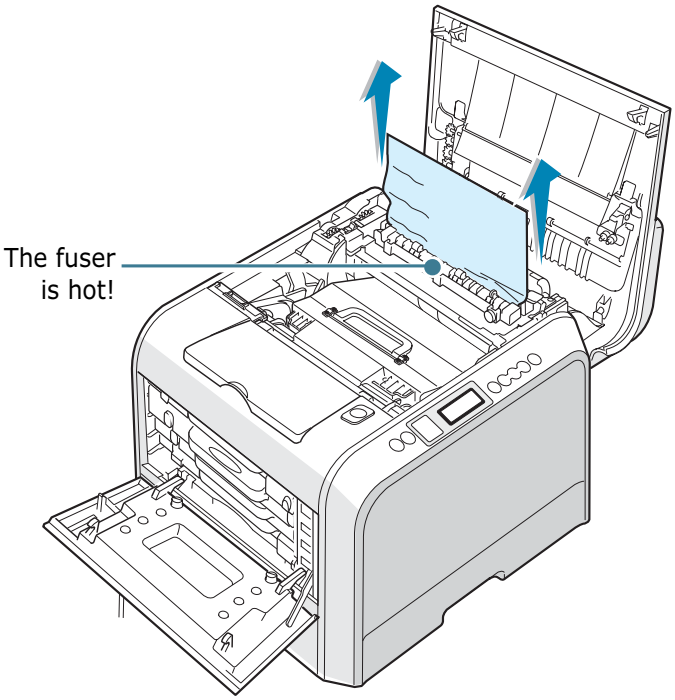

CAUTION: Do not touch the fuser. It is hot and could cause burns! The fuser's operating temperature is 180°C (356°F). Take care when removing paper from the machine.

7 After making sure that the left cover is open, close the top cover. Make sure that it is securely latched.

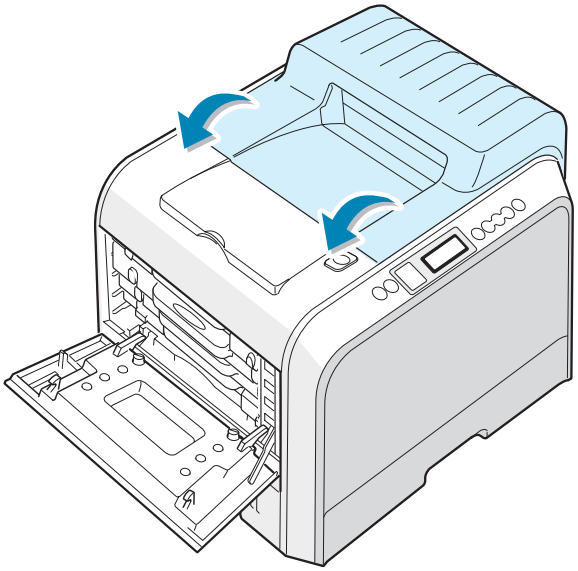

CAUTION: Do not try to close the top cover with the left cover closed. This may cause damage to the machine.

8 Close the left cover firmly.

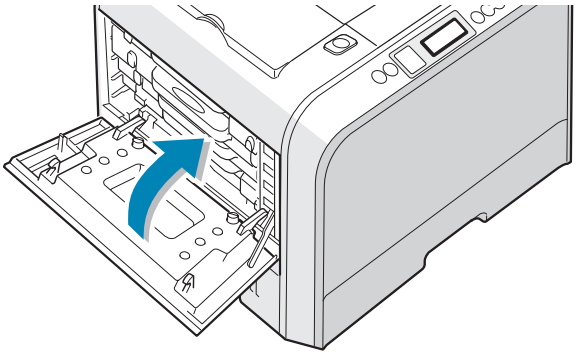

9 Close the right cover. The printer resumes printing.

In the Optional Tray2

1 Using the handle, open the right cover.

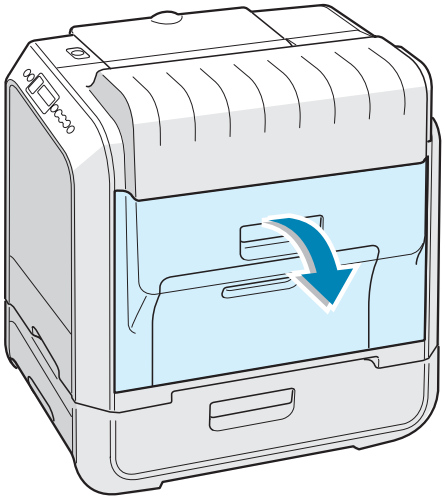

2 Remove the jammed paper in the direction shown. To avoid the paper tearing, pull it out gently and slowly.

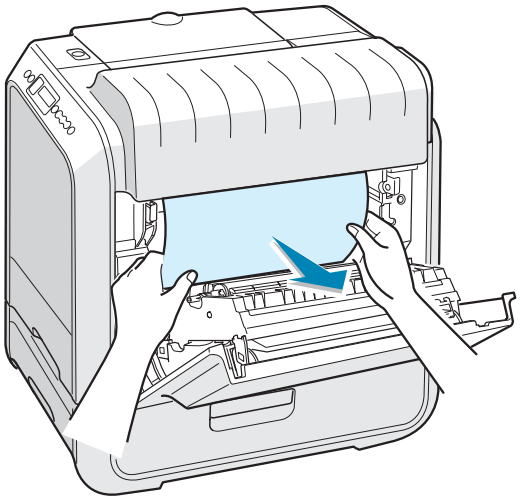

3 Close the right cover. The printer resumes printing.

4 If you cannot find the jammed paper in the machine, open the outer jam cover in Tray 2.

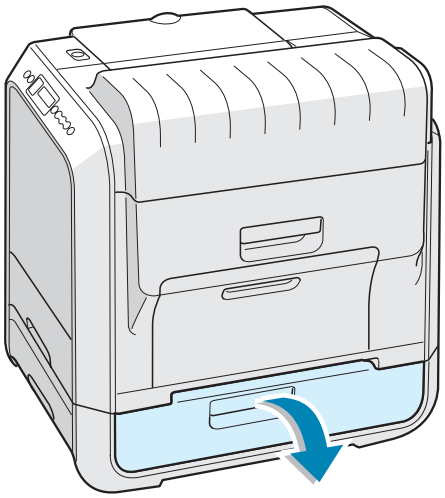

5 Open the inner cover of Tray 2.

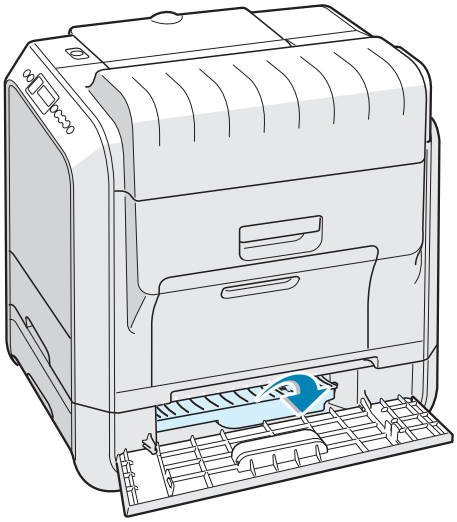

6 Pull the jammed paper out in the direction shown. To avoid the paper tearing, pull it out gently and slowly.

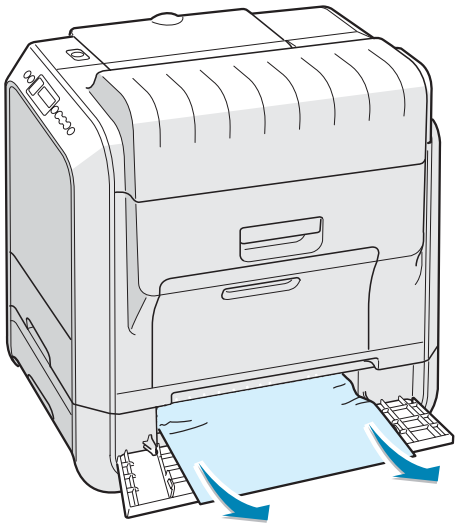

7 Close the two jam covers. Go to step 11.

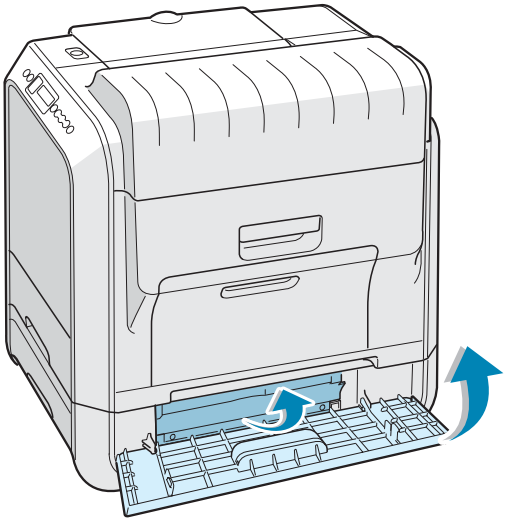

If there is any resistance, and paper does not move immediately when you pull, stop pulling and continue to step 8.

8 Pull the optional tray, Tray 2, out of the printer.

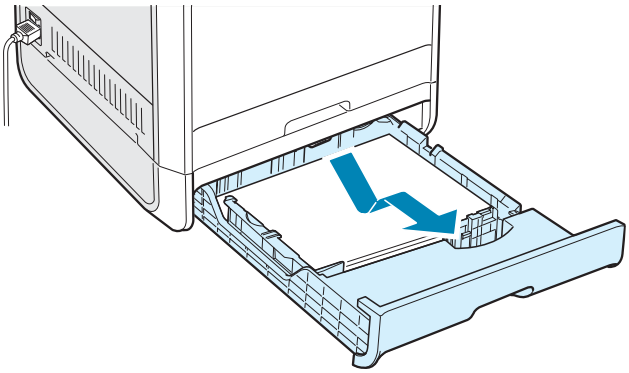

9 If you see the jammed paper, remove the paper from the machine by gently pulling it straight out.

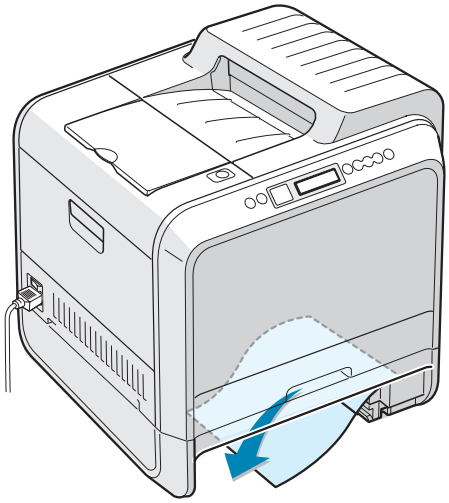

10 Slide the tray back into the printer and close the two jam covers.

11 Open and close the right cover. The printer resumes printing.

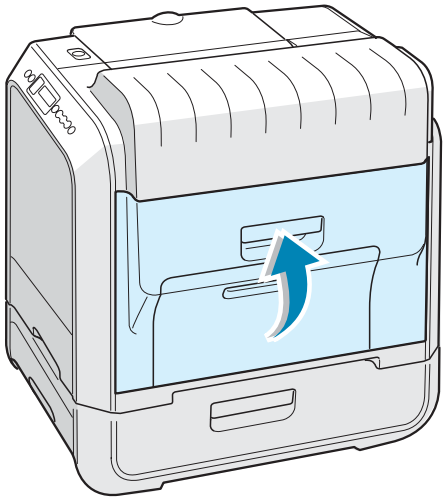

Tips for Avoiding Paper Jams

By selecting the correct paper types, most paper jams can be avoided. If a paper jam occurs, follow the steps outlined in "Clearing Paper Jams" on page 7.6.

- Follow the procedures on page 2.4. Ensure that the adjustable guides are positioned correctly.
- Do not overload the paper tray. Ensure that the paper is below the paper limit mark on the inside wall of the tray.
- Do not remove the paper from the tray while printing.
- Flex, fan and straighten the paper before loading.
- Do not use creased, damp or highly curled paper.
- Do not mix paper types in the tray.
- Use only recommended print materials. See "Paper Specifications" on page E.3.
- Ensure that the print side is facing down when loading paper in the tray and in the Multi-purpose Tray.

Solving Print Quality Problems

Dirt inside of the printer or improper paper loading may reduce the print quality. See the table below to troubleshoot the problem.

Problem	Solution
Light or faded print 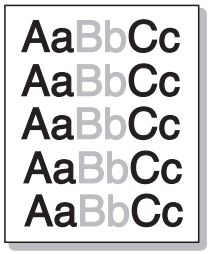 	If a vertical white streak or faded area appears on the page: • The toner supply is low. You may be able to temporarily extend the toner cartridge life. See "Redistributing the Toner" on page 6.5. If this does not improve the print quality, install a new toner cartridge. • The paper may not meet paper specifications (for example, the paper is too moist or too rough). See "Paper Specifications" on page E.3. • A combination of faded or smeared defects may indicate that the toner cartridge needs cleaning. See page 6.30. • The surface of the LSU may be dirty. Clean the LSU. See page 6.27.
Toner specs 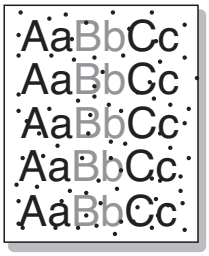 	• The paper may not meet specifications (for example, the paper is too moist or too rough). See "Paper Specifications" on page E.3. • The transfer roller or the paper path may be dirty. See "Cleaning the Inside of the Printer" on page 6.30.
Dropouts 	If generally rounded, faded areas occur randomly on the page: • A single sheet of paper may be defective. Try reprinting the job. • The moisture content of the paper is uneven or the paper has moist spots on its surface. Try a different brand of paper. See "Paper Specifications" on page E.3. • The paper lot is bad. The manufacturing process can cause some areas to reject toner. Try a different kind or brand of paper. • The toner cartridge may be defective. See "Vertical repetitive defects" on the next page. • If these steps do not correct the problems, contact a service representative.

Problem	Solution
Vertical lines 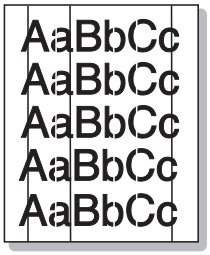 	If black vertical streaks appear on the page: • The drum inside the machine has probably been scratched. Install a new drum cartridge. If white vertical lines appear on the page: • The Laser Scanner window has probably been contaminated, clean the Laser Scanner window. Holding the end of the cleaner, slide it in and out several times. See "Cleaning the LSU Inside the Printer" on page 6.27.
Gray background 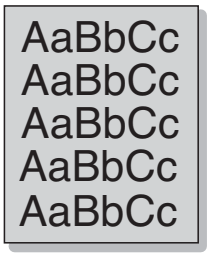 	If the amount of background shading becomes unacceptable, the procedures below may fix the problem. • Change to lighter weight pages. See "Paper Specifications" on page E.3. • Check the printer's environment; very dry (low humidity) or high humidity (higher than 80% RH) conditions can increase the amount of background shading. • Remove the old drum cartridge and install a new one. See "Replacing the Drum Cartridge" on page 6.13.
Toner smear 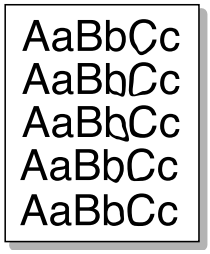 	• Clean the inside of the printer. See "Cleaning the Inside of the Printer" on page 6.30 • Check the paper type and quality. See "Paper Specifications" on page E.3. • Remove the toner cartridge and install a new one. See "Replacing the Toner Cartridges" on page 6.7.
Vertical repetitive defects 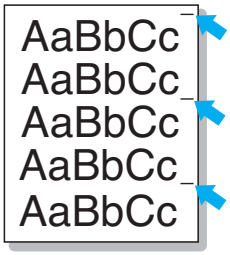 	If marks repeatedly appear on the printed side of the page at even intervals: • Clean the inside of the printer. See "Cleaning the Inside of the Printer" on page 6.30. After cleaning the inside of the printer, if you still have the same problems, install a new toner cartridge. See "Replacing the Toner Cartridges" on page 6.7. • Parts of the printer may have toner on them. If the defects occur on the back of the page, the problem will likely correct itself after a few more pages. • The fusing assembly may be damaged. Contact a service representative.

Problem	Solution
Background scatter	Background scatter results from bits of toner distributed on the printed page. • The paper may be too damp. Try printing with a different batch of paper. Do not open packages of paper until necessary so that the paper does not absorb too much moisture. • If background scatter occurs on an envelope, change the printing layout to avoid printing over areas that have overlapping seams on the reverse side. Printing on seams can cause problems. • If background scatter covers the entire surface area of a printed page, adjust the print resolution through your software application or the printer properties.
Misformed characters 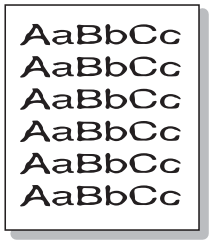	• If characters are improperly formed and producing hollow images, the paper stock may be too slick. Try a different paper. See "Paper Specifications" on page E.3. • If characters are improperly formed and producing a wavy effect, the scanner unit may need service. Verify that it also occurs on a demo page. Refer to the Setup Guide. For service, contact a service representative.
Page skew 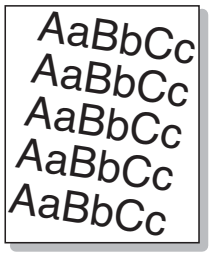	• Check the paper type and quality. See "Paper Specifications" on page E.3. • Ensure that the paper or other material is loaded correctly and the guides are not too tight or too loose against the paper stack.
Curl or wave 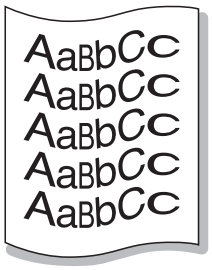	• Check the paper type and quality. Both high temperature and humidity can cause paper curl. See "Paper Specifications" on page E.3. • Turn the stack of paper over in the tray. Also try rotating the paper 180° in the tray.
Wrinkles or creases 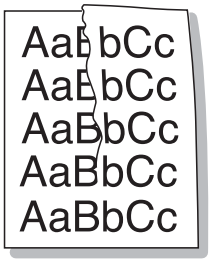	Ensure that the paper is loaded properly. • Check the paper type and quality. See "Paper Specifications" on page E.3. • Turn the stack of paper over in the paper tray. Also try rotating the paper 180° in the tray.

Problem	Solution
Back of printouts are dirty	• The transfer roller may be dirty. See "Cleaning the Inside of the Printer" on page 6.30. • Check for leaking toner. Clean the inside of the printer.
Black pages	• The drum cartridge may not be installed properly. Remove the drum cartridge and reinsert. • The drum cartridge may be defective and need replacing. Install a new drum cartridge. • The printer may require repair. Contact a service representative.
Loose toner	Clean the inside of the printer. • Check the paper type and quality. See "Paper Specifications" on page E.3. • Install a new toner cartridge. See "Replacing the Toner Cartridges" on page 6.7. • If the problem persists, the printer may require repair. Contact a service representative.
Character Voids	Character voids are white areas within the parts of characters that should be solid black: • If you are using transparencies, try another type of transparency. Due to the composition of the transparency, some character voids are normal. • You may be printing on the wrong surface on the paper. Remove the paper and turn it around. • The paper may not meet paper specifications. See page E.3.
Horizontal stripes	If horizontally aligned black streaks or smears appear: • The drum cartridge may be installed improperly. Remove the drum cartridge and reinsert. • The drum cartridge may be defective. Install a new drum cartridge. See "Replacing the Drum Cartridge" on page 6.13. • If the problem persists, the printer may require repair. Contact a service representative.

Understanding Display Messages

Messages appear on the display on the control panel to indicate the printer's status or errors. Refer to the tables below to understand the message's meaning and correct the problem if necessary. Messages and their meanings are listed in alphabetical order.

NOTE: When you call for service, it is very helpful to tell the service representative the dispaly message.

Message	Status	Do this...
ADC Not Confirm Error	A problem has occurred in the ADC in the printer.	Contact a service representative.
Cover Open	The top cover is open.	Close the top cover firmly.
Dev. Motor Error	A problem has occurred in the development motor of the printer.	Unplug the power cord and plug it in again. If the problem persists, please call for service.
Engine Fuser Error	A problem has occurred in the fuser.	Unplug the power cord and plug it in again. If the problem persists, please call for service.
Engine Fuser Low Heat Error	The temperature in the fuser is abnormally low.	Unplug the power cord and plug it in again. If the problem persists, please call for service.
Engine Fuser Over Heat Error	The temperature in the fuser is abnormally high.	Unplug the power cord and plug it in again. If the problem persists, please call for service.
Engine LSU Error	A problem has occurred in the LSU (Laser Scanning Unit) in the printer.	Unplug the power cord and plug it in again. If the problem persists, please call for service.
Image Transfer Error	The image transfer unit is either not working or not correctly installed in the printer.	Replace the image transfer unit. OR Make sure the installed image transfer unit is properly seated.
Invalid Drum Cartridge	An invalid drum cartridge is installed.	Only install a Samsung-approved drum cartridge, designed for your printer.

Message	Status	Do this...
Invalid Image Transfer	An invalid image transfer unit is installed.	Only install a Samsung-approved image transfer unit, designed for your printer.
Invalid New Toner [Color]	An invalid new toner cartridge is installed.	Only install a Samsung-approved toner cartridge, designed for your printer. If you install an approved toner cartridge, contact a service provider.
Invalid Toner [Color]	An invalid toner cartridge is installed.	Only install a Samsung-approved toner cartridge, designed for your printer.
Jam0 In [Tray]	A paper jam has occurred from the indicated tray.	Remove the jammed paper from the corresponding tray, referring to page 7.6.
Jam In Duplex Path	A paper jam has occurred while printing on both sides of the paper.	Remove the jammed paper from the printer, referring to page 7.13.
Jam In Exit Area	A paper jam has occurred in the paper exit area.	Remove the jammed paper from the printer, referring to page 7.10.
Jam Inside Printer	A paper jam has occurred inside the printer.	Open the right cover and remove the jammed paper from the printer, referring to page 7.9.
Load Manual Press Cont Key	The Multi-purpose Tray is empty in the manual feed mode.	Load a sheet of print material and press the **On-Line/Continue** button. You need to press the button for each page to be printed.
Load [Size] In [Tray]	The paper size specified in the printer properties does not match the paper you are loading.	Load the correct paper in the tray.
Main Motor Error	A problem has occurred in the main motor of the printer.	Unplug the power cord and plug it in again. If the problem persists, please call for service.
Memory Overflow	The printer does not have enough memory to print the current job. An error has occurred in the firmware program of the printer.	The job automatically clears and the printer returns to Standby Mode. • Expand the memory in your printer. See "Installing Printer Memory" on page D.2.

Message	Status	Do this...
Page Too Complex	Too much complicated data was sent to the printer.	Simplify the page layout and remove unnecessary graphics from your document. To expand the memory in your printer, see "Installing Printer Memory" on page D.2.
Ready IP Conflict	An IP address conflicts with only other devices on the network.	Contact a service representative and choose an address within your subnet which will not conflict with any other devices.
Ready [CMYK] Low Toner	The corresponding toner cartridge in your printer is nearly empty.	Redistribute the toner in corresponding toner cartridge, referring to page 6.5.
Replace Drum Cartridge	The drum cartridge is either not installed in the printer or is empty.	Install the drum cartridge. OR Replace the drum cartridge with a new one. See page 6.13.
Replace Image Transfer	The image transfer unit is not installed in the printer or is empty.	Install the image transfer unit. OR Replace the image transfer unit with a new one. See page 6.21.
Replace Toner [Color]	The indicated color toner cartridge is not installed in the printer or is empty.	Install the corresponding color toner cartridge. OR Replace the corresponding toner cartridge with a new one. See page 6.7.
Press Cont Key Replace Cart	The level of the toner in the toner cartridge is low and printing stops until you press the **On-Line/Continue** button.	• To continue printing, press the **On-Line/Continue** button. • When the printout is too light, replace the toner cartridge with a new one. • You can select whether or not this message displays on the control panel when the toner is low. See page 5.10.
Press Cont Key Replace Drum	The drum cartridge is nearing the end of its life.	• To continue printing, press the **On-Line/Continue** button. • When the printout is too light, replace the drum cartridge with a new one. • You can select whether or not this message displays on the control panel. See page 5.10.

Message	Status	Do this...
Press Cont Key Replace Transfer	The image transfer unit is nearing the end of its life.	• To continue printing, press the **On-Line/Continue** button. • When the printout is too light, replace the image transfer unit with a new one. • You can select whether or not this message displays on the control panel. See page 5.10.
Press Cont Key Replace T2 Roller	The second transfer roller is nearing the end of its life.	• To continue printing, press the **On-Line/Continue** button. • When the printout is too light, replace the second transfer roller with a new one. Contact a service representative. • You can select whether or not this message displays on the control panel. See page 5.10.
Tray2 Error	Optional Tray2 is not properly installed or connected to the printer.	After turn the printer off and then back on, reinstall the optional tray2. If the message persists, contact a service representative.
Tray2 Jam Cover Open	Tray2 jam cover is open.	Close Tray2 cover firmly.
Waste Motor Error	A problem has occurred in waste toner motor.	Contact a service representative.
Waste Toner Tank Full/Not Install	The waste toner container is full.	Replace the waste toner container with a new one. See page 6.10.

Common Windows Problems

Problem	Possible Cause and Solution
"File in Use" message appears during installation.	Exit all software applications. Remove all software from the StartUp Group, then restart Windows. Reinstall the printer driver.
"Error Writing to LPTx" message appears.	• Ensure that the cables are connected correctly and the printer is on. • If bi-directional communication is not turned on in the driver, it will also cause this message.
"General Protection Fault", "Exception OE", "Spool32", or "Illegal Operation" messages appear.	Close all other applications, reboot Windows and try printing again.

NOTE: Refer to the Microsoft Windows 9x/Me/NT 4.0/2000/XP User's Guide that came with your PC for further information on Windows error messages.

Common Macintosh Problems

Problems in the Chooser

Problem	Possible Cause and Solution
The printer driver icon does not appear in Chooser.	Software is not installed correctly. • The LaserWriter driver should be present as a part of the Macintosh OS. Make sure that the LaserWriter driver is in the **Extensions** folder within the **Systems** folder. If not, install the LaserWriter driver component from the Macintosh OS CD. • Make sure that you are using a high-quality cable. • Make sure that the printer is on the correct network. Select **Network** or **AppleTalk Control Panel** from **Control Panels** in the **Apple** menu and then choose the correct network.
The printer name does not appear in the **Select a PostScript Printer** box in the Chooser.	• Make sure that the cables are connected correctly and the printer is turned on. • Check if "Ready" appears on the display of the control panel. If not, press the **On-Line/Continue** button to switch your printer to on-line. • Make sure that the correct printer driver has been selected in Chooser. • If the printer resides on a network with multiple zones, make sure that the correct zone is selected in the AppleTalk Zones box in Chooser. • Make sure that AppleTalk is on; the button next to **Active** is selected in Chooser. You may need to restart the computer to activate the change.

Printing Errors

Problem	Possible Cause and Solution
You cannot use the computer while the printer is printing.	Background Printing has not been selected. • For LaserWriter 8.3, turn **Background Printing** on in the Chooser. Status messages will now be redirected to the Print Monitor allowing you to continue working while the computer is processing data to be sent to the printer. • For LaserWriter 8.4 or higher, turn **Background Printing** on at the Print window.

Common Linux Problems

Problem	Possible Cause and Solution
I can't change settings in the configuration tool.	You need to have administrator privileges to be able to change global settings.
I am using the KDE desktop but the configuration tool and LLPR won't start.	You may not have the GTK libraries installed. These usually come with most Linux distributions, but you may have to install them manually. Refer to your distribution's installation manual for more details about installing additional packages.
I just installed this package but can't find entries in the KDE/Gnome menus.	Some versions of the KDE or GNOME desktop environments may require that you restart your session for the changes to take effect.
I get a "Some options are not selected" error message while editing the printer settings.	Some printers have conflicting settings, meaning that some settings for two options can't be selected at the same time. When you change a setting and the Printer Package detects such a conflict, the conflicting option is changed to a "No Choice" value. You have to choose an option that does not conflict before being able to submit the changes.
I can't make a printer the system default.	In some conditions, it may not be possible to change the default queue. This happens with some variants of LPRng, especially on recent RedHat systems that use the "printconf" database of queues. When using printconf, the **/etc./printcap** file is automatically refreshed from the database of printers managed by the system (usually through the "printtool" command), and the queues in **/etc./printcap.local** are appended to the resulting file. The default queue in LPRng is defined as the first queue in **/etc./printcap**, therefore it is not possible for the Linux Printer Package to change the default when some queues have otherwise been defined using printtool. LPD systems identify the default queue as the one named "lp". Thus, if there is already a queue by this name, and if it doesn't have any alias, then you won't be able to change the default. To work around this, you can either delete the queue or rename it by manually editing the **/etc./printcap** file.
The N-up setting does not work correctly for some of my documents.	The N-up feature is achieved through post-processing of the PostScript data that is being sent to the printing system. However, such post-processing can only be adequately achieved if the PostScript data conforms to the Adobe Document Structing Conventions. Problems may arise when using N-up and other features relying on post-processing if the document being printed isn't compliant.

Problem	Possible Cause and Solution
I am using BSD lpr (Slackware, Debian, older distributions) and some options chosen in LLPR don't seem to take effect.	Legacy BSD lpr systems have a hard limitation on the length of the option string that can be passed to the printing system. As such, if you selected a number of different options, you may exceed the length of the options and some of your choices won't be passed to the programs responsible for implementing them. Try to select less options that deviate from the defaults, to save on memory usage.
I am trying to print a document in Landscape mode, but it prints rotated and cropped.	Most Unix applications that offer a Landscape orientation option in their printing options will generate correct PostScript code that should be printed as is. In that case, you need to make sure that you leave the LLPR option to its default Portrait setting, to avoid unwanted rotations of the page that would result in a cropped output.
Some pages come out all white (nothing is printed), and I am using CUPS.	If the data being sent is in Encapsulated PostScript (EPS) format, some earlier versions of CUPS (1.1.10 and before) have a bug preventing them from being processed correctly. When going through LLPR to print, the Printer Package will work around this issue by converting the data to regular PostScript. However, if your application bypasses LLPR and feeds EPS data to CUPS, the document may not print correctly.
I can't print to a SMB (Windows) printer.	To be able to configure and use SMB-shared printers (such as printers shared on a Windows machine), you need to have a correct installation of the SAMBA package that enables that feature. The "smbclient" command should be available and usable on your system.
My application seems to be frozen while LLPR is running.	Most Unix applications will expect a command like the regular "lpr" command to be non-interactive and thus return immediately. Since LLPR is waiting for user input before passing the job on to the print spooler, very often the application will wait for the process to return, and thus will appear to be frozen (its windows won't refresh). This is normal and the application should resume functioning correctly after the user exits LLPR.
How do I specify the IP address of my SMB server?	It can be specified in the "Add Printer" dialogue of the configuration tool, if you don't use the CUPS printing system. Unfortunately, CUPS currently doesn't allow you to specify the IP address of SMB printers, so you will have to be able to browse the resource with Samba in order to be able to print.
Some documents come out as white pages when printing.	Some versions of CUPS, especially those shipped with Mandrake Linux before the 8.1 release, have some known bugs when processing the PostScript output from some applications. Try upgrading to the latest version of CUPS (at least 1.1.14). Some RPM packages for the most popular distributions are provided as a convenience with this Linux Printing Package.

Problem	Possible Cause and Solution
I have CUPS and some options (such as N-up) seem to be always enabled even though I don't choose them in LLPR.	There may be some local options defined in your **~/.lpoptions** file, which are manipulated by the lpoptions command. These options are always used if not overridden by LLPR settings. To get rid of all options for a printer, run the following command, replacing "printer" with the name of the queue: lpoptions -x printer
I configured a printer to print to a file, but I get "Permission denied" errors.	Most printing systems will not run as the super-user but as a special user (usually "lp"). Therefore, make sure that the file you have chosen to print to is accessible to the user owning the spooler daemon.
On my PCL (or GDI) printer, I sometimes get error messages printing instead of my document.	Unfortunately, some Unix applications may generate non-compliant PostScript output that may not be supported by Ghostscript, or even the printer itself in PostScript mode. You can try to capture the output to a file and view the results with Ghostscript (gv or ghostview will allow you to do so interactively) and see if you get error messages. However, since the application is at fault probably, contact your software vendor to inform them of the issue.

A

Using Your Printer with a Macintosh

This chapter includes:

- **Installing Software for Macintosh**
- **Printing a Document**
- **Using Advanced Printing Features**

Installing Software for Macintosh

Your printer supports Macintosh systems with a built-in USB interface. When you print a file from a Macintosh computer, you can use the SPLC driver to support your printer's major printing features.

System Requirements

To use your printer and its software with a Macintosh, your system should have:

Macintosh Hardware Requirement:

- One of the following Macintosh models:
  -Power Macintosh series
  -Power Macintosh G3, G4
  -iMac series
  -PowerBook series
  -iBook series
- USB interface

Macintosh System Requirement:
System 8.6 or later

NOTE: Please refer SAMSUNG Homepage for MAC OS 10.x printer driver. SAMSUNG Homepage: www.samsungprinter.com

Installing Software

1 Turn the printer and computer off and plug the USB cable into your printer's USB connector. For more details, refer to the Setup Guide.

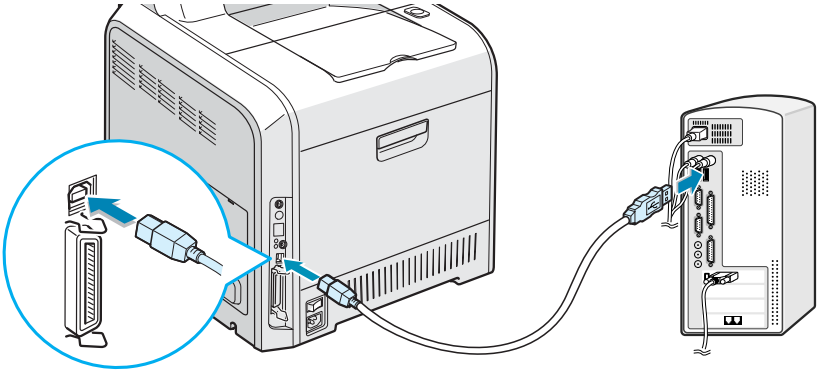

NOTE: If you are using a USB hub, connect the printer's cable to the first tier of the hub, or the printer may malfunction. If the printer doesn't work with the hub, connect it directly to the USB port.

2 Turn on your computer and printer.

3 Insert the CD-ROM which came with your printer into the CD-ROM drive.

4 Double-click **SAMSUNG_CLP** on your Macintosh desktop.

5 Double-click the **West** folder.

6 Double-click the **Samsung CLBP installer** icon next to each language to select the correct one.

7 Click **Continue**, and then click **Continue**.

A

8 The Samsung CLBP installer window opens. Select the installation type. The window provides the following two options for software installation:

- **Easy Install** (recommended method): This option installs the SPLC driver.
- **Custom Install**: This option allows you to choose which components will be installed, the SPLC driver or Adobe Acrobat Reader program for opening the User's Guide.

9 Click **Install**.

If other programs are operating, the alert message appears. Click **Continue** to install the software, or click **Cancel** and close other programs, and install the software.

10 After installation is complete, click **Restart**.

Choosing Your Printer

1 From the **Apple** menu, select **Chooser**.

2 From the left pane of the Chooser window, click **Samsung SPLC**. Then your printer name will appear in the right pane of the Chooser window.

3 Click **Samsung SPLC** and **CLP-500**, and close the Chooser window.

4 The message window indicating that you have changed your current printer appears. Click **OK**.

5 An CLP-500 icon will be created on your desktop.

Printing a Document

When you print with a Macintosh, you need to check the printer software setting in each application you use. Follow these steps to print from a Macintosh:

1. Open a Macintosh application and select a file you want to print.

2. Open the **File** menu, and click **Page Setup** (**Document Setup** in some applications).

3. Choose your paper size, orientation, scaling and other options, and then click **OK**.

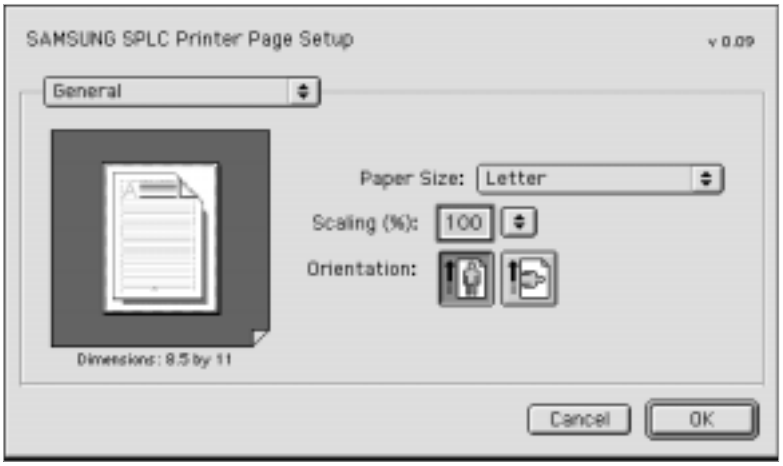

Choose **Watermark** to add a watermark to each page in your document to emphasize its purpose or indicate how it should be handled. For details on the watermark options, see "Using Watermarks" on page 4.10.

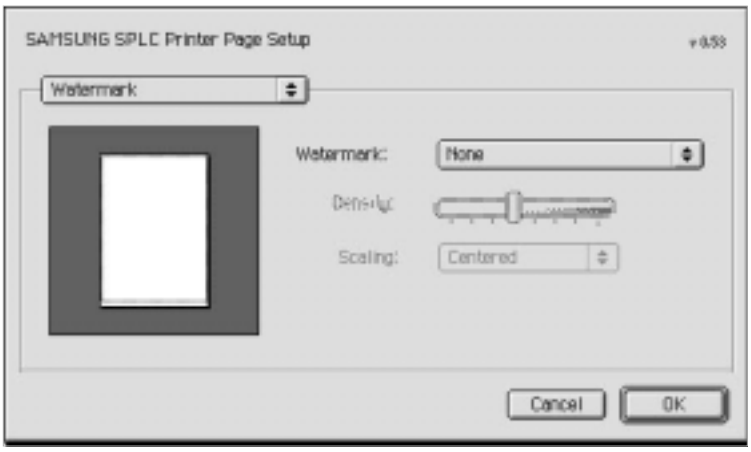

NOTE: The higher than Mac OS 9.1 version doesn't support the Watermark feature.

4 Open the **File** menu and click **Print**. You will see the SAMSUNG SPLC Printer window.

5 Choose the number of copies and indicate which pages you want to print.

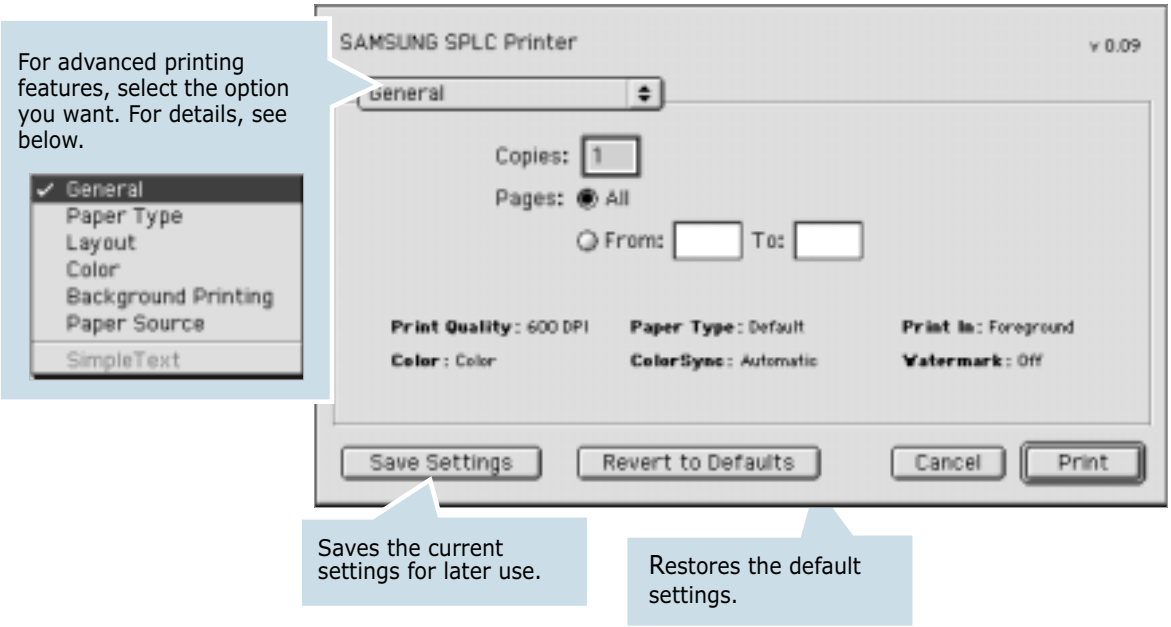

6 Click **Print** when you finish setting the options.

Using Advanced Printing Features

The SAMSUNG SPLC Printer window contains five categories of advanced properties. Listed below is the name of each property.

- Paper Type
- Layout
- Color
- Background Printing
- Paper Source

Figures next display each property in the SAMSUNG SPLC Printer window.

Paper Type

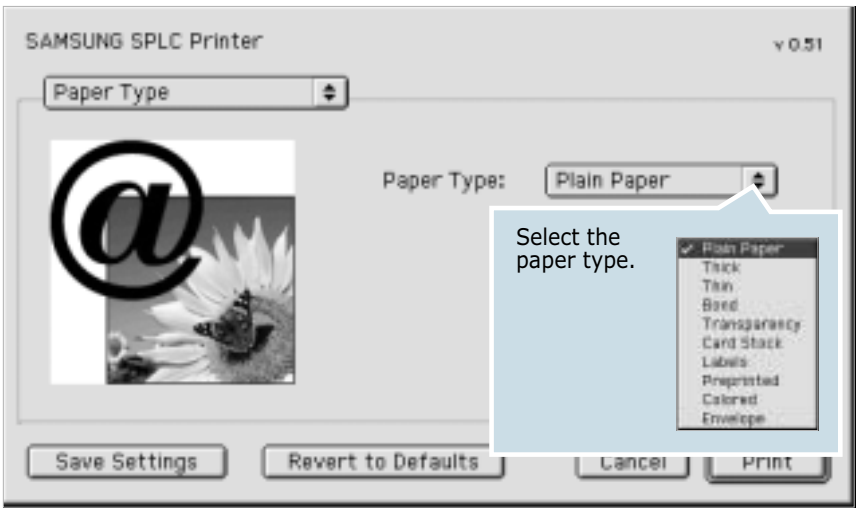

Layout

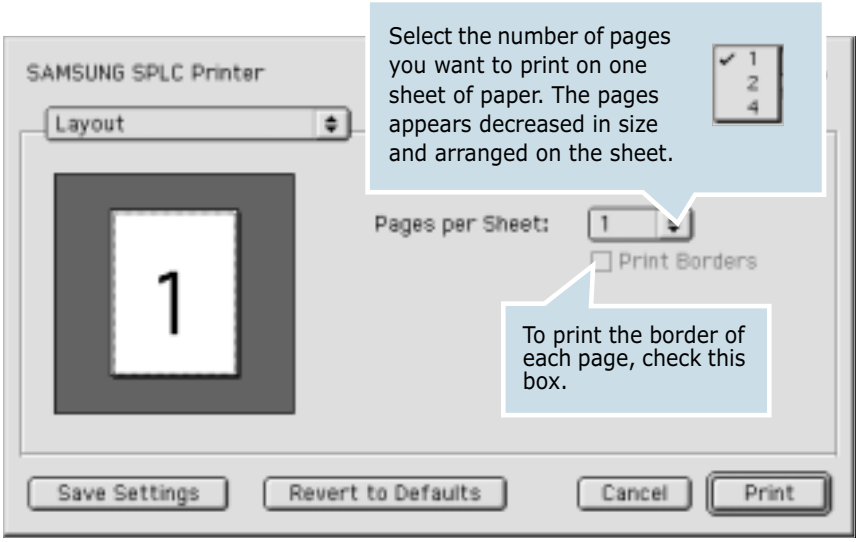

Color

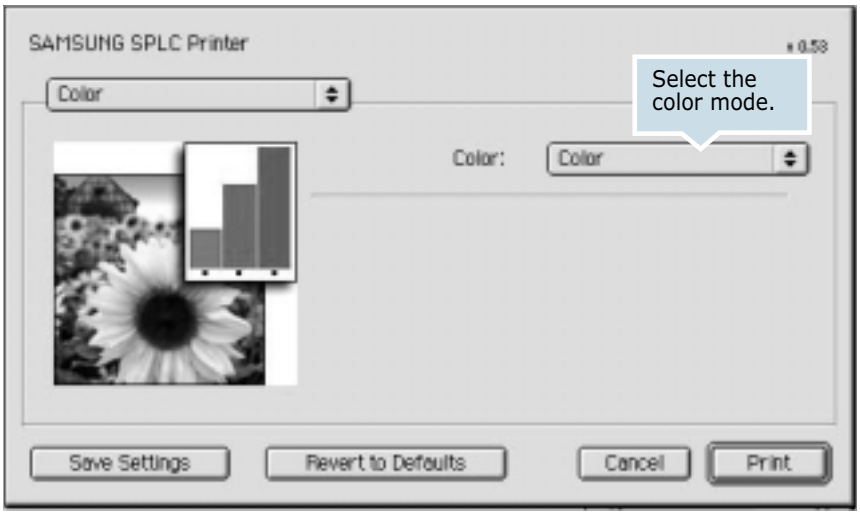

A

Background Printing

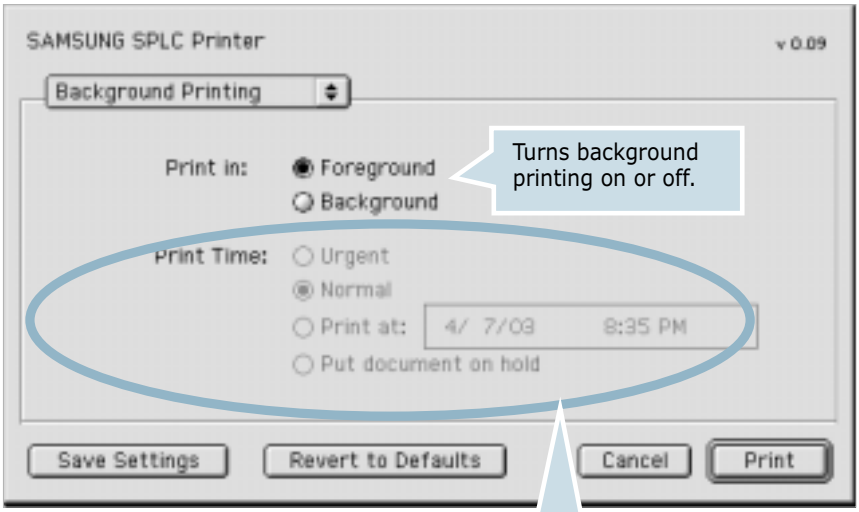

Select a priority for your print job in the queue of jobs waiting to print, click one of the following:

- **Urgent**: to print before any Normal priority job.
- **Normal**: to print in the order the job is received.
- **Print at**: to print at the specific time you enter in the day and time in the fields to the right.
- **Put document on hold**: to hold the print job in the print queue until you are ready to release it.

Paper Source

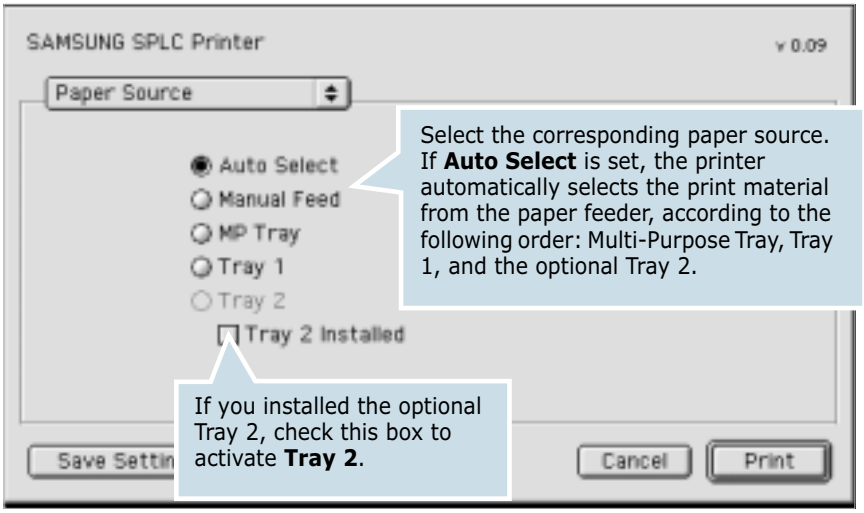

B Using Your Printer in Linux

You can use your printer in a Linux environment.

This chapter includes:

- **Installing the Printer Driver**
- **Using the Configuration Tool**
- **Changing LLPR Properties**

Installing the Printer Driver

System Requirements

Supported OS

- Redhat 6.2/7.0/7.1 and above
- Linux Mandrake 7.1/8.0 and above
- SuSE 6.4/7.0/7.1 and above
- Debian 2.2 and above
- Caldera OpenLinux 2.3/2.4 and above
- Turbo Linux 6.0 and above
- Slackware 7.0/7.1 and above

Recommended Requirements

- Pentium II or Power PC G3
- RAM 64 MB or higher
- HDD 20 MB or higher

Softwares

- Glibc 2.1 or higher
- GTK+ 1.2 or higher
- GhostScript

Installing the Printer Driver

1. Make sure that you connect the printer to your computer. Turn both the computer and the printer on.

2. When the Administrator Login window appears, type in "**root**" in the Login field and enter the system password.

NOTE: You must log in as a super user (root) to install the printer software. If you are not the super user, ask your system administrator.

3 Insert the printer software CD-ROM. The CD-ROM automatically runs.

NOTE: If the CD-ROM does not automatically run, click the icon at the bottom of the window. When the Terminal screen appears, type in:
[root@local /root]# **cd /mnt/cdrom** (the CD-ROM directory)
[root@local cdrom]# **./setup.sh**

4 Select the installation type, either **Recommended** or **Expert**, and then click **Continue**.

Recommended is fully automated and no interaction is required. **Expert** installation allows you to select the install path or printing system.

5 If you selected **Recommended**, go to Step 6.

For **Expert**, select an option and then click **Begin Install**.

B

6 The printer driver installation begins. When the installation is completed, click **Start**.

7 The Linux Printer Configuration window opens. Click the **Add Printer** icon on the tool bar at the top of the window.

NOTE: Depending on the printing system in use, the Administrator Login window may appear. Type in "**root**" in the Login field and enter the system password.

8 You see the printers currently added to your system. Select the printer you want to use. The function tabs available for the selected printer appear at the top of the Add a Printer window.

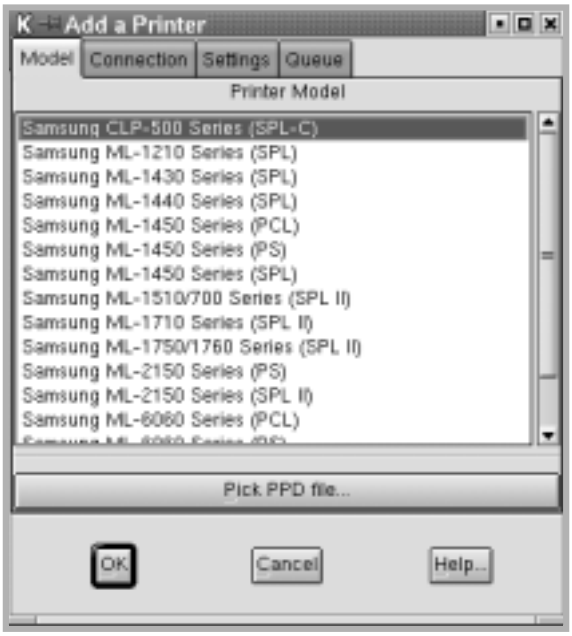

NOTE: If the printer supports PS printing, you should select the PS driver.

9 Click the **Connection** tab and ensure that the printer port is set properly. If not, change the device setting.

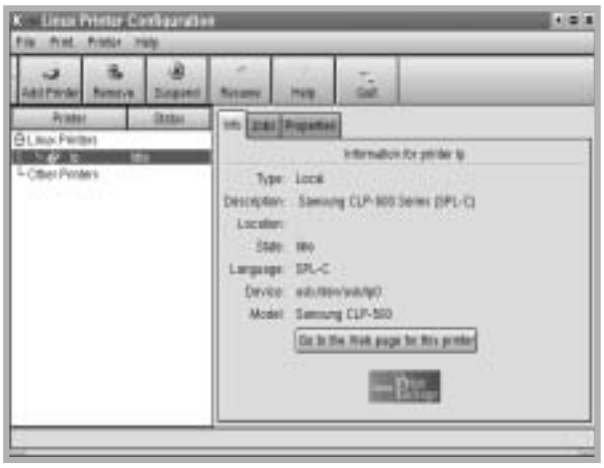

10 You can use the **Settings** tab and the **Queue** tab to view the printer's current settings. If necessary, you can change the settings.

NOTE: The options may differ depending on the printer in use. The Description and the Location field in the Queue screen may not appear depending on the printing system in use.

11 To exit, click **OK**.

12 When the window prompts that the new printer is successfully configured, click **OK**.

13 The Linux Printer Configuration window reappears. You can view the information about your printer from the **Info** tab. If necessary, you can change the printer's configuration. For details about changing the printer's configuration, see "Using the Configuration Tool" on page B.8.

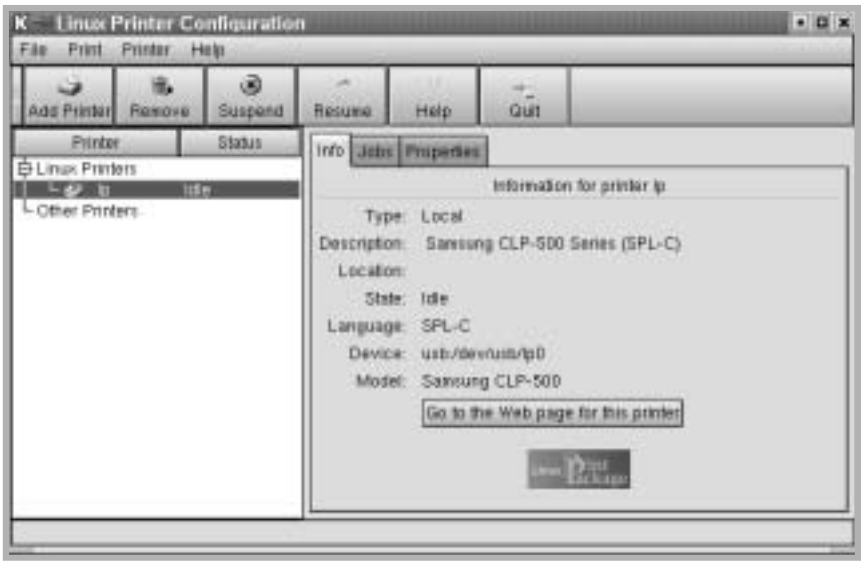

B

Changing the Printer Connection Method

If you change the printer connection method from USB to parallel or vice versa while in use, you must re-configure your Linux printer by adding the printer to your system. Take the following steps:

1. Make sure that you connect the printer to your computer. Turn both the computer and the printer on.

2. When the Administrator Login window appears, type in "**root**" in the Login field and enter the system password.

NOTE: You must log in as a super user (root) to install a new printer to the printing system. If you are not the super user, ask your system administrator.

3. From the Startup Menu icon at the bottom of the desktop, select **Linux Printer** and then **Configuration Tool**.

   You can also access the Linux Printer Configuration window by typing "**linux-config**" in the Terminal screen.

4. When the Linux Printer Configuration window appears, click the **Add Printer** icon on the tool bar at the top of the window.

5. Click the **Connection** tab at the top of the Add a Printer window.

   Ensure that the printer port is set properly. If not, change the device setting.

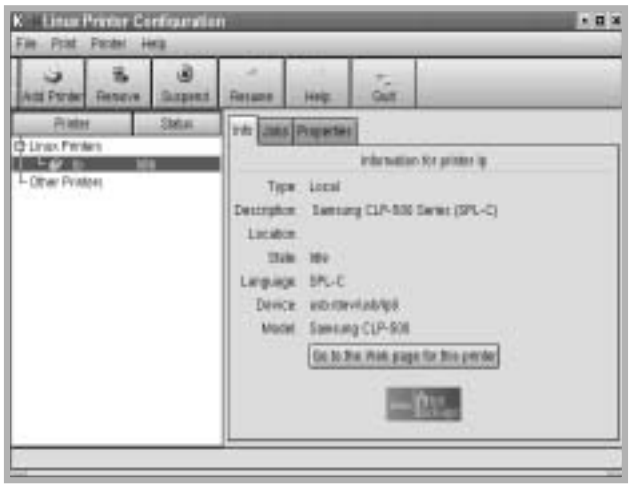

6. Click **OK**.

Uninstalling the Printer Driver

1 From the Startup Menu icon at the bottom of the desktop, select **Linux Printer** and then **Configuration Tool**.

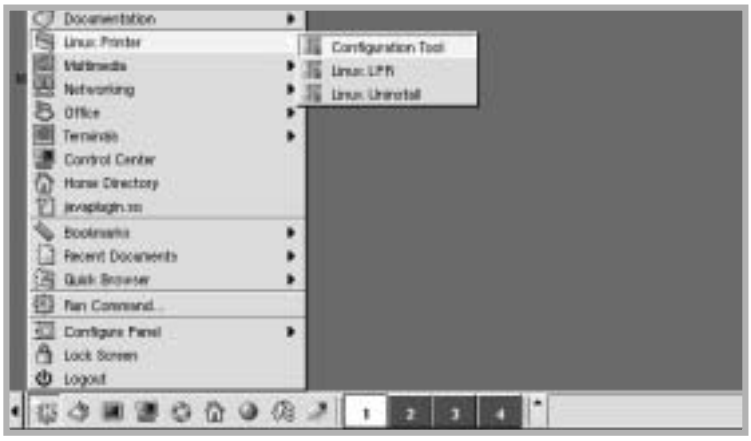

You can also access the Linux Printer Configuration window by typing "**linux-config**" in the Terminal screen.

2 In the Linux Printer Configuration window, select the **Uninstall** command from the **File** menu.

3 The Administrator Login window appears. Type in "**root**" in the Login field and enter the system password. Click **Proceed**.

NOTE: You must log in as a super user (root) to uninstall the printer software. If you are not the super user, ask your system administrator.

4 A message window appears asking you to confirm the uninstallation. Click **Yes**.

5 Select **Complete uninstall** and then click **Uninstall**.

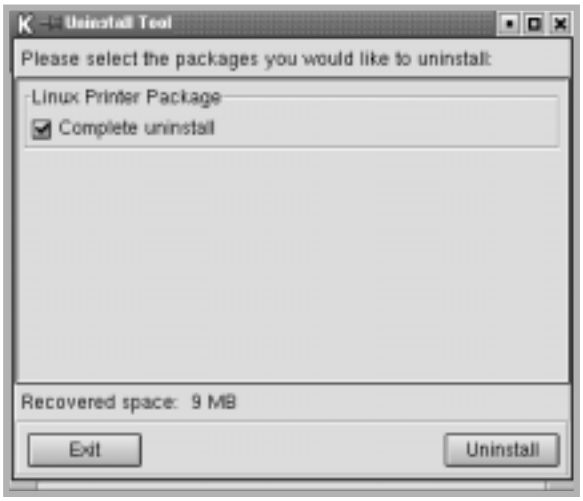

B

6 Click **OK** to begin uninstallation.

7 When the uninstallation is completed, click **Finished**.

Using the Configuration Tool

The configuration tool accesses administrative tasks, including adding and removing a new printer, and changing their global settings. Regular users can also run it to easily inspect job queues, examine the printer properties and change their local preferences.

To access the Configuration Tool:

1 From the Startup Menu icon at the bottom of the screen, select **Linux Printer** and then **Configuration Tool**. The Linux Printer Configuration window appears.

You can also open this window from the Terminal screen by typing in "**linux-config**."

2 The Linux Printer Configuration window shows a list of installed printers in the left pane. The right pane shows a number of tabs that display information regarding the currently selected printer.

Select your printer, if not currently selected.

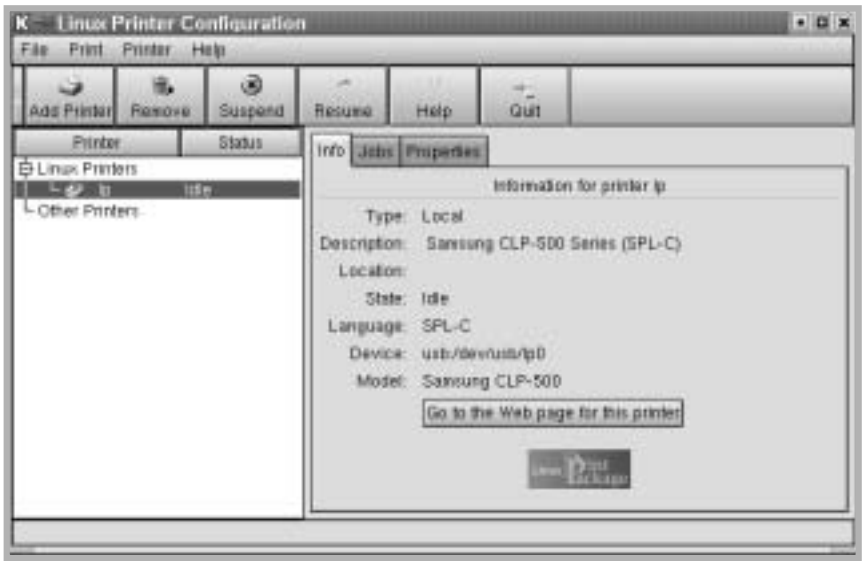

3 The **Info** tab shows general information about the printer.

If you are an Internet user, you can click **Go to the Web page for this printer** to access the web page.

Click the **Jobs** tab to inspect and manage the job queue for the selected printer. You can suspend, resume or delete a specific job(s) in the queue. If you drag a specific job(s), you can drop it into the print queue of another printer.

The **Properties** tab allows you to change the default printer settings.

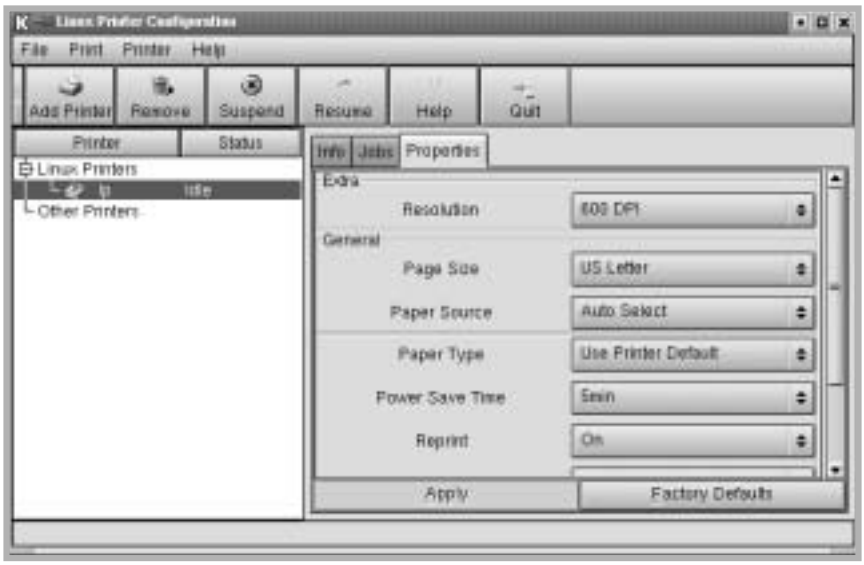

NOTE: Regular users are able to override the system-wide default settings defined by the administrator. When a regular user clicks **Apply**, these custom settings are saved in the user's profile and may be later used with LLPR. If the administrator is running the configuration tool, then the settings are saved as the new global defaults.

B

Changing LLPR Properties

You can fine tune the printer's properties by opening the LLPR Properties window.

To open the LLPR Properties window:

1. From the application you are using, select the **Print** command.

2. When the Linux LPR window opens, click **Properties**.

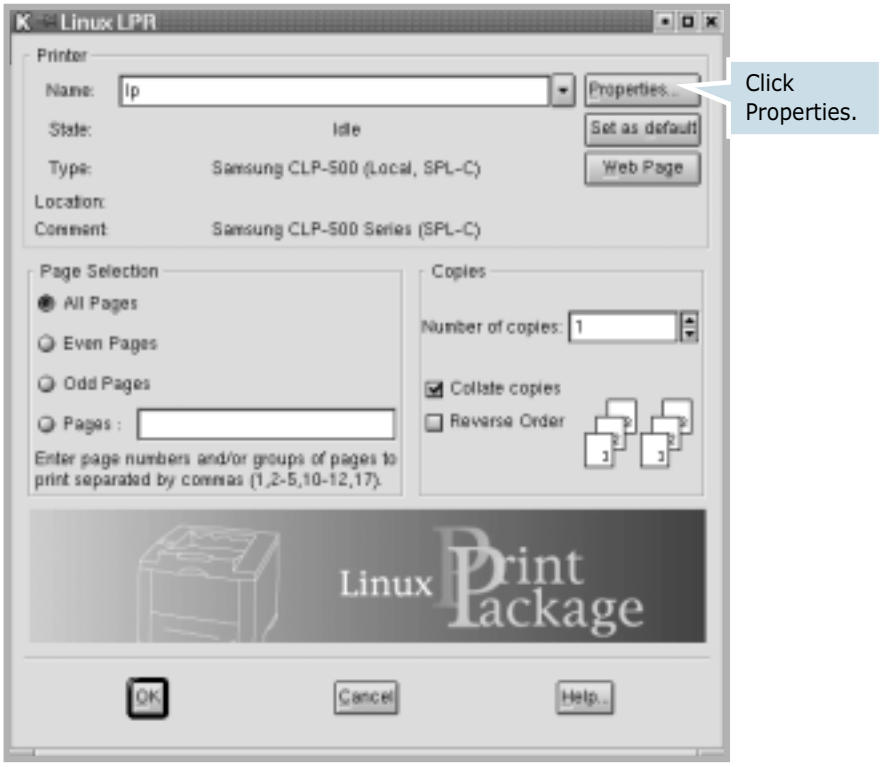

You can also open the LLPR window:

- Click the Startup Menu icon at the bottom of the screen and select **Linux Printer** and then **Linux LPR**.
- If the Linux Printer Configuration window is currently open, select **Test Print** from the **Print** menu.

3 The LLPR Properties window opens.

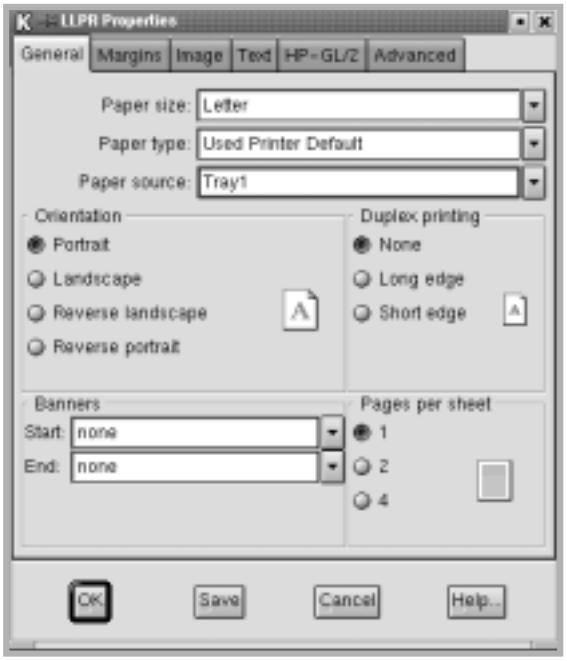

The following six tabs are at the top of the window:

- **General** - allows you to change the paper size, the paper type, the paper source, the orientation of the documents; enables the duplex feature, adds start and end banners, and changes the number of pages per sheet.
- **Margins** - allows you to specify the page margins. The graphics on the right shows the current settings. These margins do not apply when printing regular PostScript data.
- **Image** - allows you to set image options that are used when printing image files, i.e. when a non-PostScript document is passed to LLPR on the command line. Color settings will also take effect for postscript documents.
- **Text** - allows you to select the density of the text and turn the syntax coloring on or off.
- **HP-GL/2** - allows you to set default options to print documents in the HP-GL/2 format, which is used by some plotters.
- **Advanced** - allows you to override the default settings for the printer.

If you click the **Save** button at the bottom of the window, the options are kept between LLPR sessions.

Use the **Help** button to view details about the options in the window.

4 To apply the options, click **OK** in the **LLPR Properties** window. You are returned to the **Linux LPR** window. To start printing, click **OK**.

MEMO

C USING YOUR PRINTER ON A NETWORK

If you work in a networked environment, the printer can be shared by other users on the network.

This chapter includes:

- **About Sharing the Printer on a Network**
- **Setting Up a Locally Shared Printer**
- **Setting Up a Network-Connected Printer**

NOTE: If you are a CLP-500 user, you need to install an optional network interface card. For more information, see Appendix D, "Installing Printer Options".

About Sharing the Printer on a Network

If you work in a networked environment, you can connect your printer to the network.

Locally-Shared Printer

You can connect the printer directly to a selected computer, which is called the "host computer" on the network. The printer can then be shared by other users on the network through a Windows 9x/Me/XP/NT 4.0/2000 network printer connection.

Wired Network-connected Printer

A CLP-500N printer has the built-in network interface. See page D.6 for information about installing the card.

To use a CLP-500 printer as a network printer, you need to install an optional network interface card in your printer.

Wireless Network-connected Printer

To use your printer in a wireless network environment, you need to install an optional wired/wireless network interface card in your printer. See page D.6.

Printing Across a Network

Whether the printer is locally connected or network-connected, you need to install the CLP-500 series printer software on each computer that prints documents using the printer.

Setting Up a Locally Shared Printer

In Windows 98/Me

Setting Up the Host Computer

1. Start Windows.
2. From the **Start** menu, select **Control Panel** from **Settings** and double-click on the **Network** icon.
3. Check the **File and Print Sharing** box, and click **OK**. Close the window.
4. From the **Start** menu, select **Printers** from **Settings** and double-click your printer name.
5. Select **Properties** in the **Printer** menu.
6. Click the **Sharing** tab and check the **Shared As** box. Fill in the **Shared Name** field and click **OK**.

Setting Up the Client Computer

1. Right-click the Windows **Start** button and select **Explorer**.
2. Open your network folder in the left column.
3. Right-click the shared name and select **Capture Printer Port**.
4. Select the port you want, check the **Reconnect at log on box**, and click **OK**.
5. From the Start menu, select **Settings** and then **Printers**.
6. Double-click your printer icon.
7. From the **Printer** menu, select **Properties**.
8. From the **Details** tab, select the printer port and click **OK**.

In Windows NT 4.0/2000/XP

Setting Up the Host Computer

1. Start Windows.

2. For Windows NT 4.0/2000, select **Settings**, and **Printers** from the Start menu.

   For Windows XP, select **Printers and Faxes** from the Start menu.

3. Double-click your printer icon.

4. From the **Printer** menu, select **Sharing**.

5. For Windows NT 4.0, check the **Shared** box.

   For Windows 2000, check the **Shared As** box.

   For Windows XP, check the **Share this printer** box.

6. For Windows NT 4.0, fill in the **Shared Name** field and click **OK**.

   For Windows 2000/XP, fill in the **Shared Name** field and click **OK**.

Setting Up the Client Computer

1. Right-click the Windows **Start** button and select **Explorer**.
2. Open your network folder in the left column.
3. Click the shared name.
4. For Windows NT 4.0/2000, select **Settings** and **Printers** from the **Start** menu.

   For Windows XP, select **Printers and Faxes** from the **Start** menu.
5. Double-click your printer icon.
6. From the **Printer** menu, select **Properties**.
7. From the **Ports** tab, click **Add Port**.
8. Select **Local port** and click **New Port**.
9. Fill in the **Enter a port name** field, enter the shared name.
10. Click **OK** and click **Close**.
11. For Windows NT 4.0, click **OK**.

    For Windows 2000/XP, click **Apply** and click **OK**.

Setting Up a Network-Connected Printer

You have to set up the network protocols on the printer to use it as your network printer. Setting protocols can be accomplished by using the supplied network program. Please refer to SyncThru User's Guide.

You can configure the basic network parameters through the printer's control panel. Use the printer control panel to do the following:

- Enable or disable network protocols (IPX/SPX)
- Configure TCP/IP
- Configure IPX frame types

Configuring Network Parameters on the Control Panel

Supported Operating Systems

Item	Requirements
Network Interface	10/100 Base-TX (standard for CLP-500N) or 802.11b Wireless LAN
Network Operating System	• Novell NetWare 4.x, 5.x, 6.x • Windows 95/98/Me, NT 4.0/2000/XP • Unix AT&T, BSD4.3, HP-UX, SUN OS, SOLARIS, SCO • Linux RedHat 6.0 or higher
Network Protocols	• Netware IPX/SPX • TCP/IP, DLC/LLC on Windows • Port9100 on Windows NT, Unix, Linux
Dynamic Addressing Server	• DHCP, BOOTP

- IPX/SPX: Internet Packet eXchange/Sequenced Packet eXchange
- TCP/IP: Transmission Control Protocol/Internet Protocol
- DLC/LLC: Data Link Control/Logical Link Control
- DHCP: Dynamic Host Configuration Protocol
- BOOTP: Bootstrap Protocol

Printing a Network Configuration Page

The Network Configuration page shows how the network interface card on your printer is configured. The default settings which are suitable for most applications are enabled.

1. Press the **Menu** button ( ) until you see 'Network' on the bottom line of the display.
2. Press the **Enter** button ( ) to access the menu.
3. Press the scroll button (or) until 'Print Net CFG' displays on the bottom line.
4. Press the **Enter** button ( ).

   The Network Configuration page prints out.

Setting Network Protocols

When you first install the printer, all supported network protocols are enabled when you turn the printer on. If a network protocol is enabled, the printer may actively transmit on the network even when the protocol is not in use. This may increase network traffic slightly. To eliminate unnecessary traffic, you can disable unused protocols.

1. Press the **Menu** button ( ) until you see 'Network' on the bottom line of the display.
2. Press the **Enter** button ( ) to access the menu.
3. Press the scroll button (or) until 'Config Network' displays on the bottom line. Press the **Enter** button ( ).
4. Press the scroll button (or) to display 'Yes' and press the **Enter** button ( ). Then press the **Upper Level** button ( ).
5. Press the scroll button (or) until you see the desired protocol on the bottom line.

   You can choose 'Netware'.
6. Press the **Enter** button ( ).
7. Press the scroll button (or) to change the setting to 'On' (enable) or 'Off' (disable).
8. Press the **Enter** button ( ) to save the selection.

C

Configuring TCP/IP

Your printer can be set up on a variety of TCP/IP networks. There are several ways in which your printer can be assigned a TCP/IP address, depending on your network.

- Static Addressing: TCP/IP address is assigned manually by the system administrator.
- Dynamic Addressing BOOTP/DHCP(default): TCP/IP address is assigned automatically by the server.

Static Addressing

To enter the TCP/IP address from your printer's control panel, take the following steps:

1. Press the **Menu** button ( ) until you see 'Network' on the bottom line of the display. Press the **Enter** button ( ) to access the menu.
2. Press the **Enter** button ( ) when 'Config Network' displays on the bottom line.
3. Press the scroll button (or) to display 'Yes' and press the **Enter** button ( ).
4. Press the **Upper Level** button ( ), then use the scroll button ( ).
5. Press the **Enter** button ( ) when 'Config TCP' displays.
6. Press the scroll button (or) to display 'Yes' and press the **Enter** button ( ).
7. Press the **Upper Level** button ( ), then use the scroll button ( ).
8. Press the **Enter** button ( ) when 'IP Get Method' displays.
9. Press the scroll button (or) to display 'Static' and press the **Enter** button ( ).
10. Press the **Upper Level** button ( ), then use the scroll button ( ).
11. Press the **Enter** button ( ) to access the IP Address menu.

An IP address consists of 4 bytes.

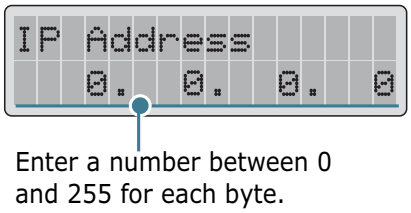

12 Press the scroll button (◁ or ▷) to enter a number between 0 and 255 and press the **Enter** button (✱).

13 Repeat Step 12 to complete the address from the 1st byte to the 4th byte.

14 To select other parameters, such as the Subnet Mask or Gateway, press the **Upper Level** button (↺), then use the scroll button (◁ or ▷). Press the **Enter** button (✱).

15 Repeat steps 12 through 13 to configure the other TCP/IP parameters.

Dynamic Addressing (BOOTP/DHCP)

To assign the TCP/IP address automatically by the server, take the following steps:

1 Press the **Menu** button (▤) until you see 'Network' on the bottom line of the display. Press the **Enter** button (✱) to access the menu.

2 Press the **Enter** button (✱) when 'Config Network' displays on the bottom line.

3 Press the scroll button (◁ or ▷) to display 'Yes' and press the **Enter** button (✱).

4 Press the **Upper Level** button (↺), then use the scroll button (▷).

5 Press the **Enter** button (✱) when 'Config TCP' displays.

6 Press the scroll button (◁ or ▷) to display 'Yes' and press the **Enter** button (✱).

7 Press the **Upper Level** button (↺), then use the scroll button (▷).

8 Press the scroll button (◁ or ▷) to display 'DHCP' and press the **Enter** button (✳).

9 To assign the address from the BOOTP server, press the **Enter** button (✳) when "BOOTP" displays.

Configuring IPX Frame Types

On IPX/SPX protocol networks (for example, Novell NetWare), the format of the network communication frames must be specified for the printer. In most cases, you can keep the default setting 'AUTO'. However, you can manually set the frame type format, if required.

- **AUTO** (default): Automatically senses and limits the frame type to the first one detected.
- **EN_8023**: Limits the frame type to IPX over IEEE 802.3 frames. All others will be discarded.
- **EN_II**: Limits the frame type to IPX over Ethernet Frames. All others will be discarded.
- **EN_8022**: Limits the frame type to IPX over IEEE 802.2 with IEEE 802.3 frames. All others will be discarded.
- **EN_SNAP**: Limits the frame type to IPX over SNAP with IEEE 802.3 frames. All others will be discarded.

Note that the IPX/SPX protocol must be enabled in the **Netware** menu before you can configure frame types. See "Setting Network Protocols" on page C.7.

Take the following steps to change the frame type format:

1. Press the **Menu** button ( ) until you see 'Network' on the bottom line of the display. Press the **Enter** button ( ) to access the menu.

2. Press the **Enter** button ( ) when 'Config Network' displays on the bottom line.

3. Press the scroll button (or) to display 'Yes' on the bottom line. Press the **Enter** button ( ).

4. Press the **Upper Level** button ( ).

5. Press the scroll button (or) until 'Netware' displays on the bottom line. Press the **Enter** button ( ).

6. Press the **Enter** button ( ) when 'On' displays.

7. Press the **Upper Level** button ( ), then use the scroll button ( ).

8. Press the **Enter** button ( ) when 'Config Netware' displays.

9. Press the scroll button (or) to display 'Yes' on the bottom line. Press the **Enter** button ( ), and then press the **Upper Level** button ( ).

10. Press the **Upper Level** button ( ), then use the scroll button ( ).

11. Press the **Enter** button ( ) when 'IPX Frame Type' displays.

12. Press the scroll button (or) to select 'Off' and then press the **Enter** button ( ).

13. Press the scroll button (or) until you see the desired frame type and press the **Enter** button ( ). Then press the **Upper Level** button ( ).

14. Press the scroll button (or) to change the setting and then press the **Enter** button ( ).

15. Repeat steps 13 and 14 to configure another frame type, if necessary.

Restoring the Network Configuration

You can return the network configuration to its default settings.

1. Press the **Menu** button ( ) until you see 'Network' on the bottom line of the display.
2. Press the **Enter** button ( ) to access the menu.
3. Press scroll button (or) until 'Default Set' displays on the bottom line.
4. Press the **Enter** button ( ) to confirm the selection.

D

Installing Printer Options

Your printer is a full-featured laser printer that has been optimized to meet most of your printing needs. Recognizing that each user may have different requirements, however, Samsung makes several options available to enhance your printer's capabilities.

This chapter includes:

- **Installing Printer Memory**
- **Installing a Network Interface Card**
- **Installing an Optional Tray**

Installing Printer Memory

Your printer has a dual in-line memory module (DIMM) slot. Use this DIMM slot to install more memory for the printer.

NOTE: Your printer has 32 MB of memory which can be expanded to 160 MB. You can purchase a 100 Pin-SDRAM Module, 3.3volt of 64 or 128MB.

CAUTION: Static electricity can damage DIMMs. When handling a DIMM, either wear an antistatic wrist strap, or frequently touch the surface of the DIMM antistatic package and then touch bare metal on the printer.

1. Turn the printer off and unplug all cables from the printer.

2. To remove the control board cover, press down on the tabs at the top and take it off.

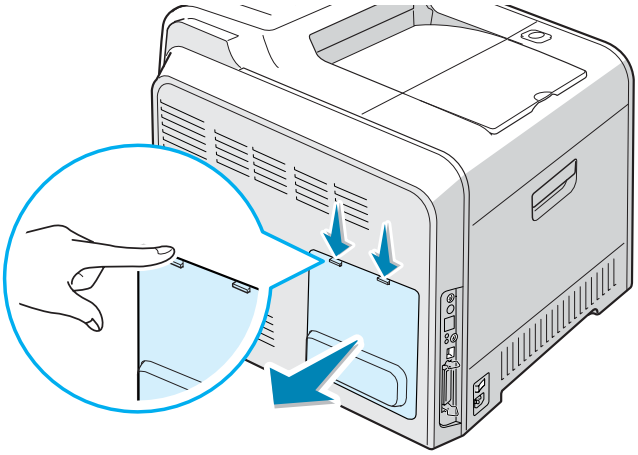

3. Remove the two screws holding the metal plate in place, and then remove the metal cover, as shown below.

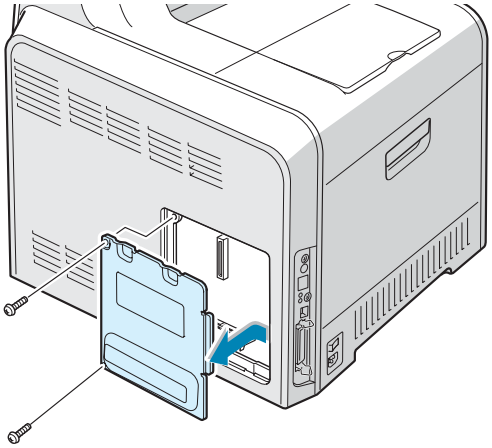

4 Open the lever on each side of the DIMM slot all the way.

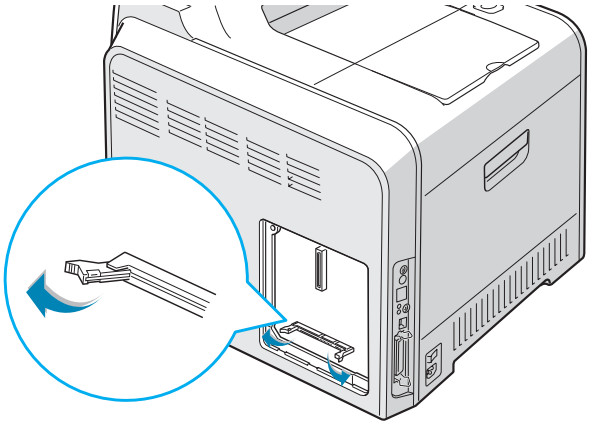

5 Remove the memory DIMM from the antistatic package. Locate the alignment notches on the bottom edge of the DIMM.

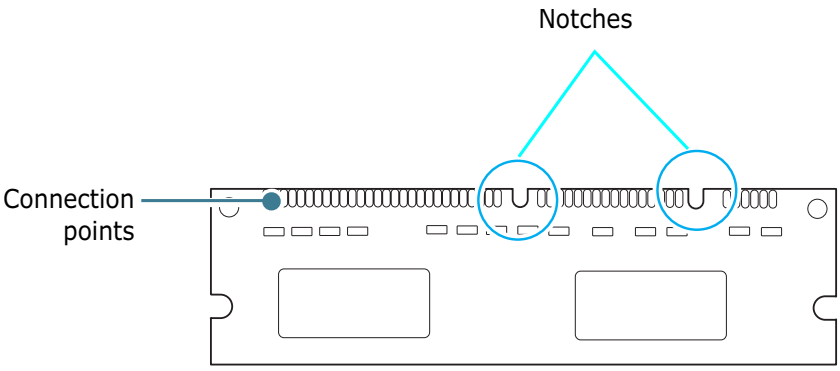

NOTE: Avoid touching the connection points along the edge of the memory.

6 Holding the DIMM by the edges, align the notches on the DIMM with the notches at the top of the DIMM slot.

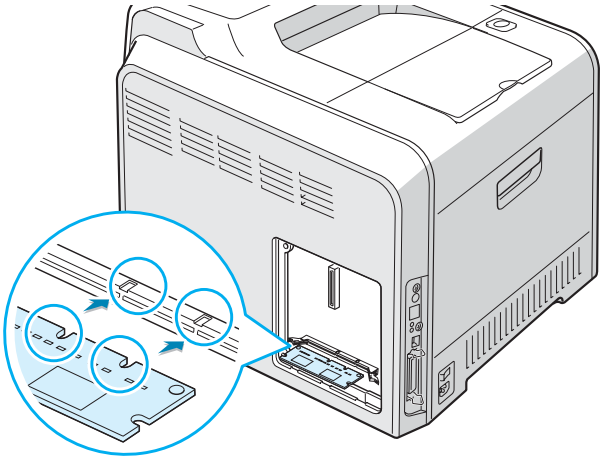

7 Insert the ends of the memory DIMM into the slots on the levers.

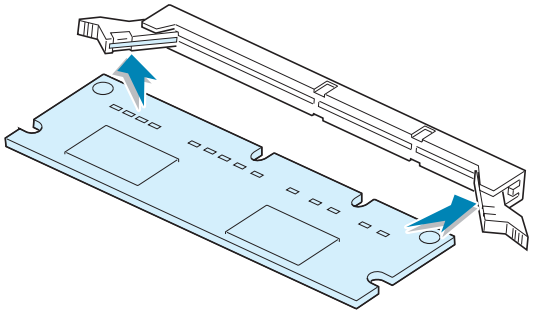

8 Push it firmly to make sure you fully insert the memory DIMM into the slot. The levers on each side are automatically latched.

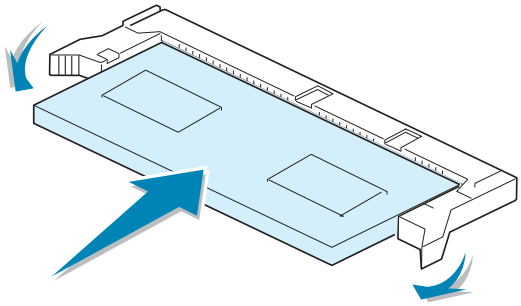

NOTE: If you have difficulty inserting the memory DIMM or closing the levers, make sure the notches on the bottom of the DIMM are aligned with the notches in the DIMM slot.

9 Replace the metal cover, as shown below, and tighten the two screws you removed in step 3.

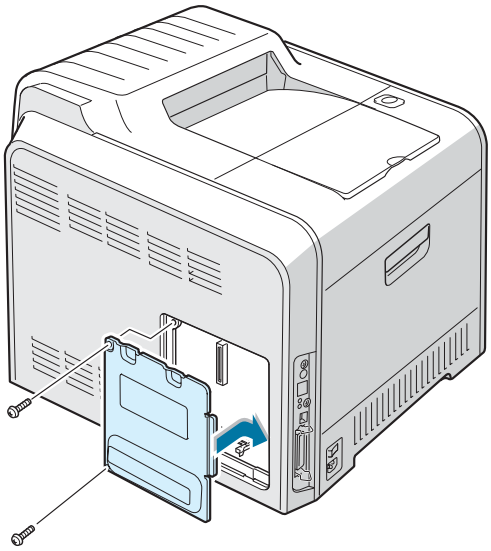

10 Replace the control board cover.

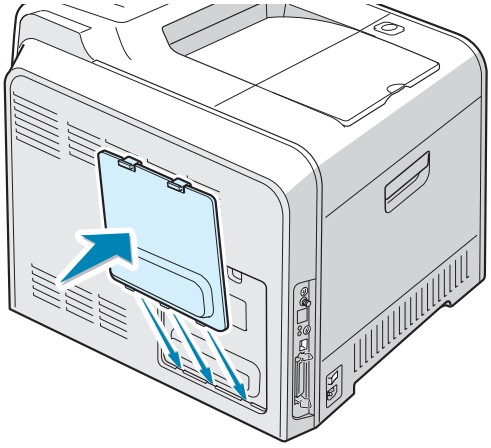

11 Reconnect the power cord and printer cable, and turn the printer on.

Removing the Memory

1 Follow steps 1 through 3 on page D.2 to access the control board.

2 Push the levers at both ends of the DIMM slot away from the DIMM.

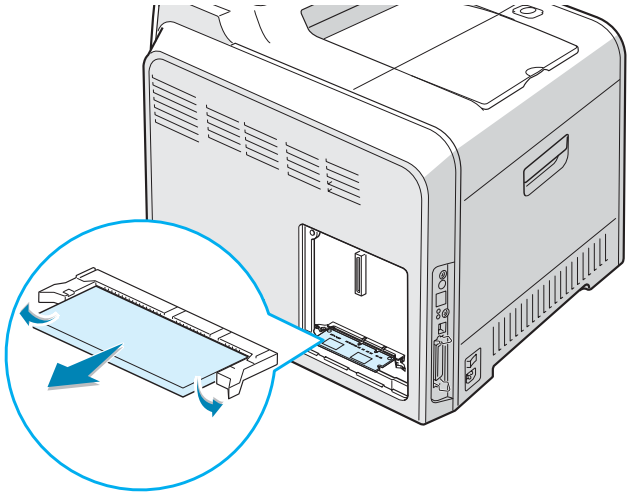

3 Place the DIMM in its original packaging or wrap it with sheet of metal as thin as paper such as aluminium foil and store it in a box.

4 Follow from step 9 on page D.4.

Installing a Network Interface Card

NOTE: When you purchase the wired/wireless network interface card, the antenna connected to the card is not separated from the card depending on your country.

To use your printer on a network, you must be equipped in your printer.

CLP-500N has a built-in network interface card. If you are a CLP-500 user, you need to install an optional network interface card.

If you want to use the printer in both a wired and a wireless network environments, you need to install an optional wired/wireless network interface card.

1. Turn the printer power off and unplug all cables from the printer.
2. To remove the control board cover, press down on the tabs at the top and take it off.

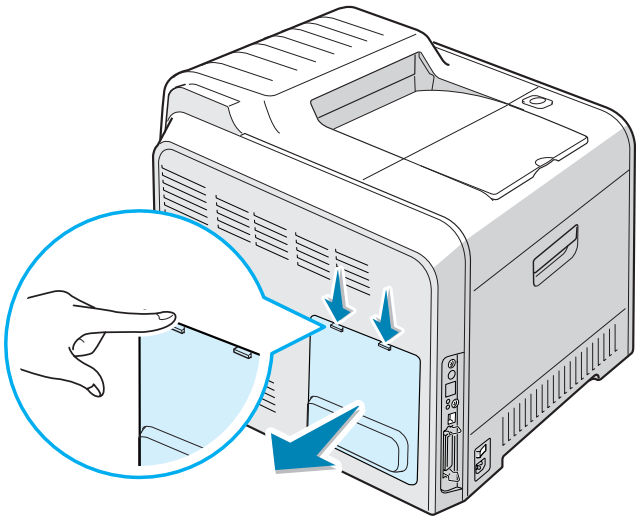

3 Remove the two screws holding the metal plate in place, and then remove the metal cover, as shown below.

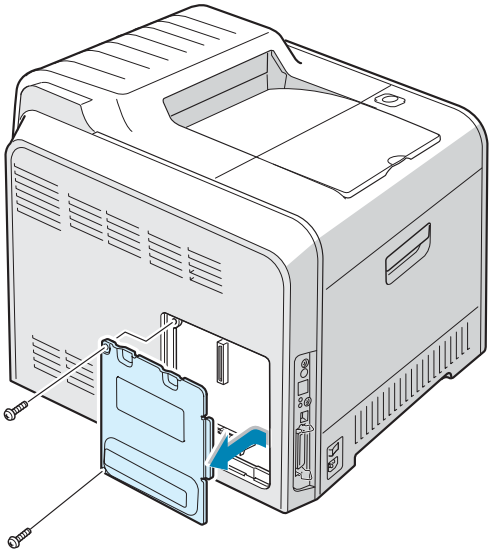

4 Push the hole lid using a tool with sharp end.

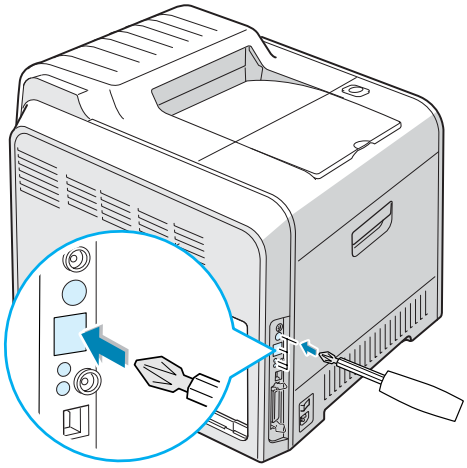

If you replace the network interface card with a new one, remove the two screws and the old card.

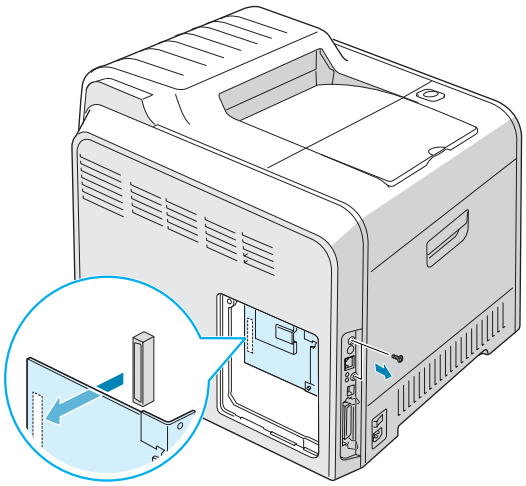

5 Align the connector on the network interface card with the connector on the control board. Make sure that the jacks on the card go through the holes. Push the card firmly into the connector until it is completely inserted into place.

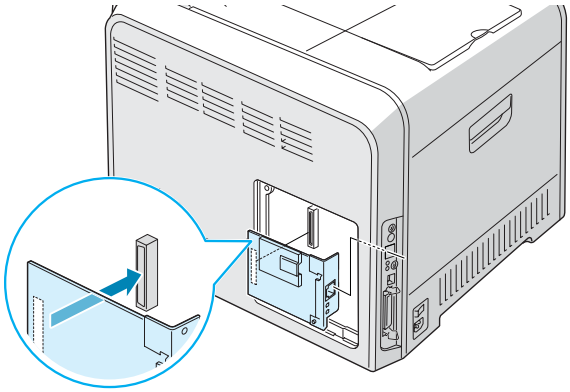

6 Tighten the two screws.

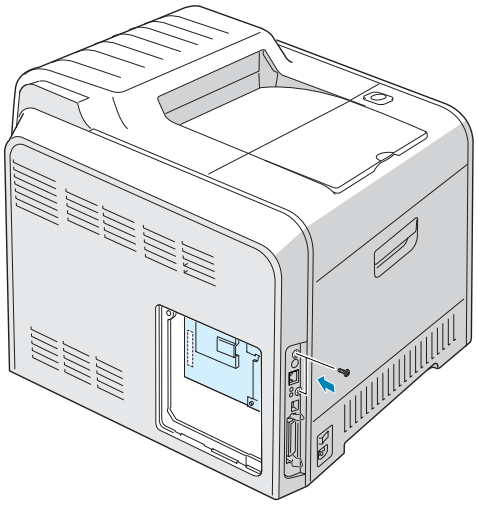

7 Replace the metal cover, as shown below, and tighten the two screws you removed in step 3.

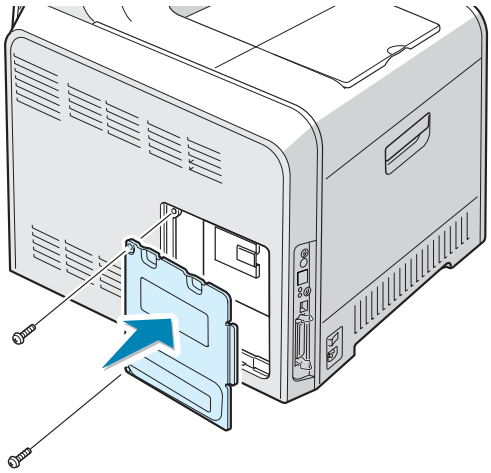

8 Replace the control board cover.

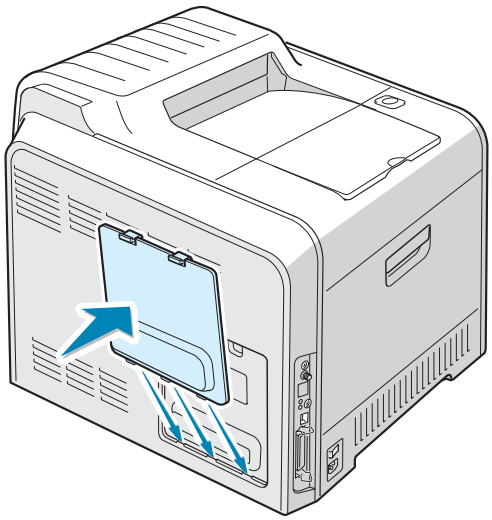

9 Plug one end of the Ethernet cable into the Ethernet network port on the Printer and the other end of the cable into a network LAN connection.

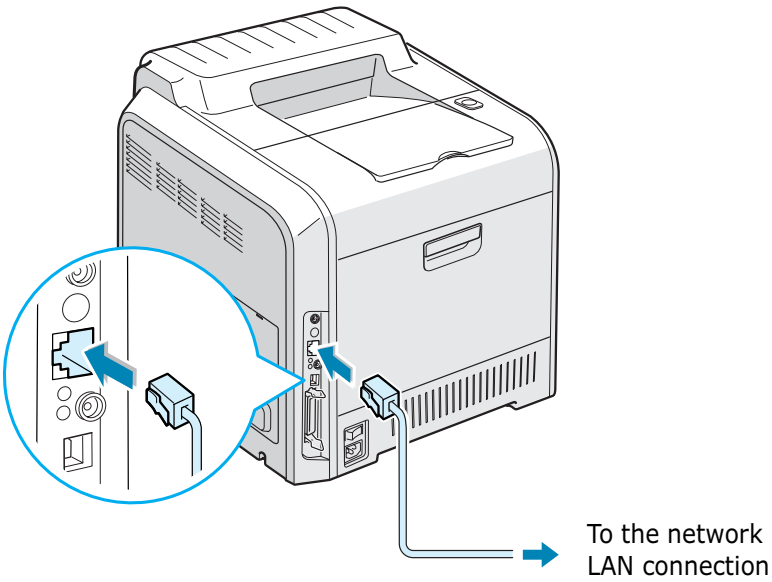

10 Connect the network cable, reconnect the power cord and then turn the printer on.

NOTE: For information about configuring and using the printer in a network environment, refer to the User's Guide provided with the network interface card. You can also configure the network parameters using the control panel; see page 5.11.

D

Installing an Optional Tray

You can increase the paper handling capacity of your printer by installing an optional Tray2. This tray holds 500 sheets of paper.

1 Turn the printer off and unplug all cables from the printer.

2 Remove the packing tape and the packing material inside of the tray.

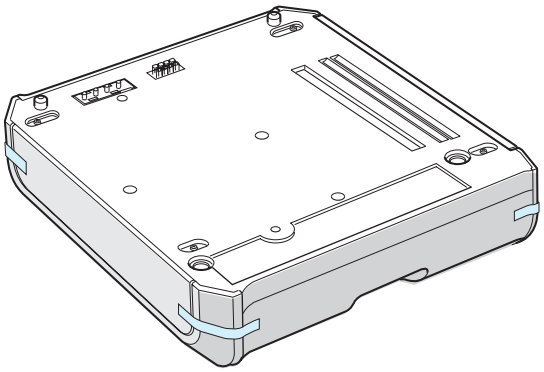

3 Find the location of the connector and the optional tray positioners.

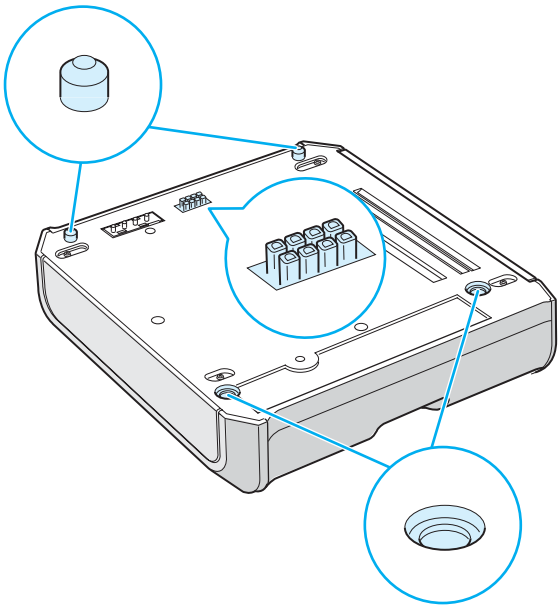

4 Place the printer over the tray, aligning the feet on the printer with the positioners in the optional tray.

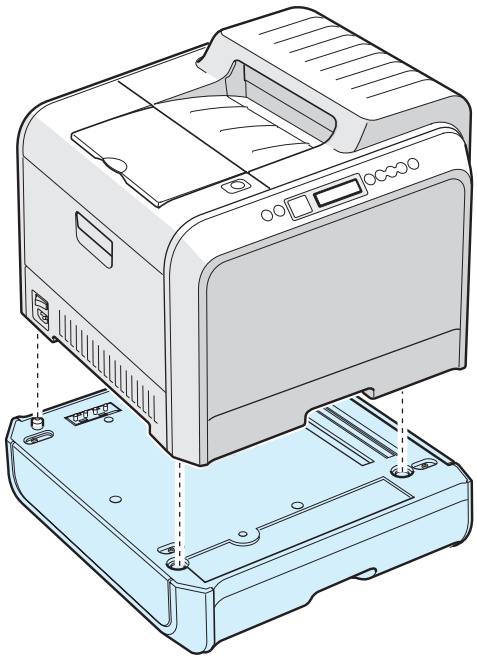

5 Load paper in the optional tray. For information about loading paper in this tray, see "Using the Optional Tray 2" on page 2.8.

6 Reconnect the power cord and cables and then turn the printer on.

When you print a document on the paper loaded in Tray 2, you must configure the properties of the printer driver.

To access the properties of the printer driver:

1 Click the Windows **Start** menu.

2 For Windows 95/98/Me/NT 4.0/2000, select **Settings** and then **Printers**.
For Windows XP, select **Printers and Faxes**.

3 Select the **Samsung CLP-500 Series** printer.

4 Click the right mouse button on the printer icon and:

In Windows 95/98/Me, select **Properties**.

In Windows NT 4.0/2000/XP, select **Properties**.

D

5 Click the **Printer** tab, and select **Tray 2** from the **Optional Tray** drop-down list.

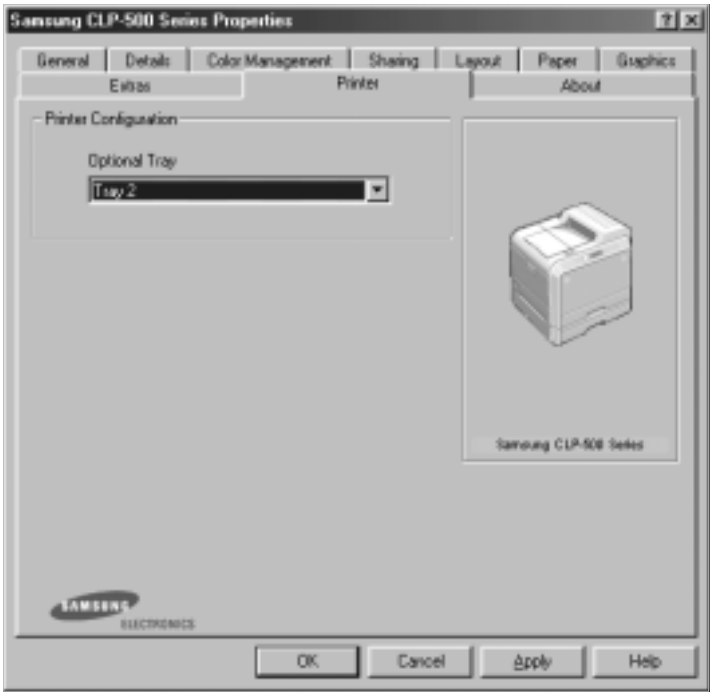

6 Click **OK** and print the document.

E SPECIFICATIONS

This chapter includes:

- **Printer Specifications**
- **Paper Specifications**

Printer Specifications

Item	Specifications and Description
Print Speed	Black:20 PPM (A4), 21 PPM (Letter);Color: 5 PPM (A4/Letter) Duplex: 10 IPM (Black); 5 IPM (Color)
Resolution	True 600x600 dpi (1200 dpi class)
Warm-up Time	15 seconds (Black); 24 seconds (4-Color)
First Printing on Time	120 seconds below
Power Rating	AC 110 ~ 127V (USA, Canada) / 220 ~ 240V (Others), 50 / 60Hz
Power consumption	400 W average during operation / Less than 30 W in sleep mode
Acoustic Noise	Printing: 50dB
Toner Supply	Four toner cartridges (Black, Yellow, Magenta, Cyan)
Toner cartridge Life	7,000 Sheets (for starter, 2,000 sheets)@ IDC 5% coverage (Black Toner) 5,000 Sheets (for starter, 1,500 sheets) @ IDC 5% coverage (Color (C/M/Y))
Duty Cycle	Monthly: 35,000 pages maximum (Black)
Weight	35kg (including consumables)
Package Weight	Paper: 1.83Kg, Plastic: 0.33Kg
External Dimensions (W x D x H)	510 (W) x 470 (D) x 405 (H) mm
Operating Environment	Temperature: 15 ~ 32.5°C / 50 ~ 90°F Humidity: 20 ~ 80% RH
Emulation	SPL-Color
Machine Life	300,000 images
Random Access Memory (RAM)	Standard 32 MB Expandable to 160 MB: 100 pin, SDRAM, 3.3V; 64, 128 MB available Use only the Samsung-approved DIMM.
Fonts	Windows font
Interface Switching	Automatic (Parallel, USB, Network)
Interface	• IEEE 1284 Bidirectional Parallel - Modes supported: Compatible, Nibble, Byte, ECP • USB Interface Standard - USB 1.1/2.0 compliant - 12/480 Mbps 1 port • Network Interface - 10/100 Base TX (CLP-500: option, CLP-500N: standard) - 802.11b Wireless LAN (optional interface)

Paper Specifications

Overview

Your printer accepts a variety of print materials, such as cut-sheet paper (including up to 100% recycled fiber content paper), envelopes, labels, transparencies and custom-size paper. Properties, such as weight, composition, grain and moisture content, are important factors affecting the printer's performance and the output quality. Paper that does not meet the guidelines outlined in this User's Guide can cause the following problems:

- Poor print quality
- Increased paper jams
- Premature wear on the printer.

NOTES:

- Some paper may meet all of the guidelines in this guide and still not produce satisfactory results. This may be the result of improper handling, unacceptable temperature and humidity levels, or other variables over which Samsung has no control.
- Before purchasing large quantities of paper, ensure that the paper meets the requirements specified in this User's Guide.

CAUTION: Using paper that does not meet these specifications may cause problems, requiring repairs. These repairs are not covered by the Samsung warranty or service agreements.

Supported Sizes of Paper

Tray1 / Tray2	Dimensions*	Weight	Capacity**
Letter	216 X 279mm (8.5 X 11in.)	• 60 to 90g/m² bond (16 to 24lb) for the single-sided printing • 75 to 90 g/m² bond (20 to 24lb) for the duplex printing	• 250 sheets of 75g/m² bond paper for the Tray 1 • 500 sheets of 75g/m² bond paper for the Tray 2
A4	210 X 297mm (8.3 X 11.7in.)		

Multi-Purpose Tray	Dimensions*	Weight	Capacity**
Minimum Size (custom)	90 X 140mm (3.5 X 5.5in.)	60 to 163g/m² bond (16 to 43lb)	100 sheets of 75g/m² bond paper
Maximum Size (custom)	216 X 356mm (8.5 X 14in.)		
Transparency	Same minimum and maximum paper sizes as listed above.	Thickness: 0.10 X 0.14 mm (0.0039 X 0.0055in.)	30 typical
Labels***		Thickness: 0.10 X 0.14 mm (0.0039 X 0.0055in.)	10 typical
Envelopes		up to 90g/m² (16 to 24lb)	up to 10

**The printer supports a wide range of media sizes. See "Printing on Card Stock or Custom-sized Materials" on page 2.20.*
***Capacity may vary depending on media weight and thickness, and environmental conditions.*
****Smoothness: 100 to 250 (Sheffield)*

NOTE: You may experience jams when using print materials with a length of less than 140mm (5.5in.). For optimum performance, ensure that you are storing and handling the paper correctly. Please refer to "Printer and Paper Storage Environment" on page E.7.

Guidelines for Using Paper

For the best result, use conventional 75g/m^2 (20lb) paper. Ensure that the paper is of good quality, and free of cuts, nicks, tears, spots, loose particles, dust, wrinkles, voids, and curled or bent edges.

If you are unsure of what type of paper you are loading, such as bond or recycled paper, check the label on the package.

The following problems may cause print quality deviations, jamming or even damage to the printer.

Symptom	Problem with Paper	Solution
Poor print quality or toner adhesion, problems with feeding	Too moist, too rough, too smooth or embossed; faulty paper lot	Try another kind of paper, between 100 ~ 250 Sheffield, 4 ~ 5% moisture content.
Dropout, jamming, curl	Stored improperly	Store paper flat in its moisture-proof wrapping.
Increased gray background shading/printer wear	Too heavy	Use lighter paper, open the rear output tray.
Excessive curl problems with feeding	Too moist, wrong grain direction or short-grain construction	Use long-grain paper.
Jamming, damage to printer	Cutouts or perforations	Do not use paper with cutouts or perforations.
Problems with feeding	Ragged edges	Use good quality paper.

NOTES:

- Do not use letterhead paper printed with low-temperature inks, such as those used in some types of thermography.
- Do not use raised or embossed letterhead.
- The printer uses heat and pressure to fuse toner to the paper. Insure that any colored paper or preprinted forms use inks that are compatible with this fusing temperature (180°C or 356°F for 0.1 second).

Paper Specifications

Category	Specifications
Acid Content	5.5 ~ 8.0pH
Caliper	0.094 ~ 0.18mm (3.0 ~ 7.0mils)
Curl in Ream	Flat within 5mm (0.02in.)
Cut Edge Conditions	Cut with sharp blades with no visible fray.
Fusing Compatibility	Must not scorch, melt, offset, or release hazardous emissions when heated to 180°C (356°F) for 0.1 second.
Grain	Long Grain
Moisture Content	4% ~ 6% by weight
Smoothness	100 ~ 250 Sheffield

Paper Output Capacity

Output Tray	Capacity
Face-down	250 sheets of 75g/m^2 bond paper

Paper Input Capacity

Input Tray	Capacity
Cassette	250 sheets of 75g/m^2 bond paper
MP tray	100 sheets of 75g/m^2 bond paper
Optional tray	500 sheets of 75g/m^2 bond paper

Printer and Paper Storage Environment

Paper storage environmental conditions directly affect the feed operation.

Ideally, the printer and paper storage environment should be at or near room temperature, and not too dry or humid. Remember that paper is hygroscopic; it absorbs and loses moisture rapidly.

Heat works with humidity to damage paper. Heat causes the moisture in paper to evaporate, while cold causes it to condense on the sheets. Heating systems and air conditioners remove most of the humidity from a room. As paper is opened and used, it loses moisture, causing streaks and smudging. Humid weather or water coolers can cause the humidity to increase in a room. As paper is opened and used it absorbs any excess moisture, causing light print and dropouts. Also, as paper loses and gains moisture it can become distorted. This can cause paper jams.

Care should be taken not to purchase more paper than can be used in a short time (about 3 months). Paper stored for long periods may experience heat and moisture extremes, which can cause damage. Planning is important to prevent damage to large supplies of paper.

Unopened paper in sealed reams can remain stable for several months before use. Opened packages of paper have more potential for environment damage, especially if they are not wrapped with a moisture-proof barrier.

The paper storage environment should be properly maintained to ensure optimum printer performance. The required condition is 20° to 24°C (68° to 75°F), with a relative humidity of 45% to 55%. The following guidelines should be considered when evaluating the paper's storage environment:

- Paper should be stored at or near room temperature.
- The air should not be too dry or too humid.
- The best way to store an opened ream of paper is to rewrap it tightly in its moisture-proof wrapping. If the printer environment is subject to extremes, unwrap only the amount of paper to be used during the day's operation to prevent unwanted moisture changes.

Envelopes

Envelope construction is critical. Envelope fold lines can vary considerably, not only between manufacturers, but also within a box from the same manufacturer. Successful printing on envelopes depends upon the quality of the envelopes. When selecting envelopes, consider the following components:

- Weight: The weight of the envelope paper should not exceed 90g/m^2 (24lb) or jamming may occur.
- Construction: Prior to printing, envelopes should lie flat with less than 6mm (0.25in.) curl, and should not contain air.
- Condition: Envelopes should not be wrinkled, nicked, or otherwise damaged.
- Temperature: You should use envelopes that are compatible with the heat and pressure of the printer.
- Size: You should only use envelopes within the following size ranges.

	Minimum	Maximum
Multi-purpose Tray	90 X 140mm (3.5 X 5.5in.)	216 X 356mm (8.5 X 14in.)

NOTES:

- Use only the Multi-purpose Tray to print envelopes.
- You may experience some paper jams when using any media with a length less than 140mm(5.5in.). This may be caused by paper that has been affected by environmental conditions. For optimum performance, make sure you are storing and handling the paper correctly. Please refer to "Printer and Paper Storage Environment" on page E.7.

Envelopes with Double Side Seams

Double side-seams construction has vertical seams at both ends of the envelope rather than diagonal seams. This style may be more likely to wrinkle. Be sure the seam extends all the way to the corner of the envelope as illustrated below.

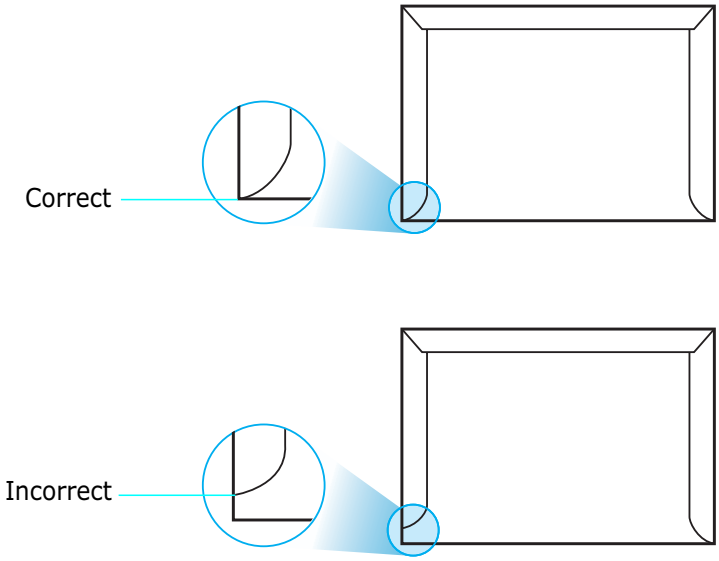

Envelopes with Adhesive Strips or Flaps

Envelopes with a peel-off adhesive strip or with more than one flap that folds over to seal must use adhesives compatible with the heat and pressure in the printer. The extra flaps and strips might cause wrinkling, creasing, or even jams and may even damage the fuser.

Envelope Margins

The following gives typical address margins for a commercial #10 or DL envelope.

Type of Address	Minimum	Maximum
Return address	15mm (0.6in.)	51mm (2in.)
Delivery address	51mm (2in.)	89mm (3.5in.)

NOTES:

- For best print quality, position margins no closer than 15mm (0.6in.) from the edges of the envelope.
- Avoid printing over the area where the envelope's seams meet.

Envelope Storage

Proper storage of envelopes helps contribute to print quality. Envelopes should be stored flat. If air is trapped in an envelope, creating an air bubble, then the envelope may wrinkle during printing. See “Printing on Envelopes” on page 2.14.

Labels

CAUTIONS:

- To avoid damaging the printer, use only labels recommended for laser printers.
- To prevent serious jams, always use the Multi-purpose Tray to print labels and always use the rear output tray.
- Never print on the same sheet of labels more than once and never print on a partial sheet of labels.

When selecting labels, consider the quality of each component:

- Adhesives: The adhesive material should be stable at 180°C (356°F), the printer’s fusing temperature.
- Arrangement: Only use labels with no exposed backing between them. Labels can peel off sheets with spaces between the labels, causing serious jams.
- Curl: Prior to printing, labels must lie flat with no more than 13mm (5in.) of curl in any direction.
- Condition: Do not use labels with wrinkles, bubbles, or other indications of separation.

See “Printing on Labels” on page 2.16.

Transparencies

Transparencies used in the printer must be able to withstand 180°C (356°F), the printer’s fusing temperature.

CAUTION: To avoid damaging the printer, use only transparencies recommended for use in laser printers.

See “Printing on Transparencies” on page 2.17.

INDEX

C

cancel, print jobs 3.4
card stock, print 2.20
clean
    inside the printer 6.30
    LSU 6.27
    outside of the printer 6.27
color mode 3.9, 3.10
components 1.4
configuration page, print 6.2
connect
    Ethernet D.9
control panel 5.2
    buttons 5.3
    display 5.2
    menus 5.5
custom-sized materials, prnt 2.20

D

display language, change 1.6
double-sided printing 4.2
drum cartridge, replace 6.13

E

envelopes, print 2.14
error messages 7.24
Ethernet cable, print D.9

F

Favorite setting, use 3.13
features
    printer 1.2

G

graphic properties, set 3.9

H

help, use 3.14

I

image transfer unit, replace 6.21
Install
    Memory D.2
    Network Interface Card D.6
    optional Tray2 D.10
    printer driver for Macintosh A.3
install
    printer options D.1
    SPL driver for Linux B.2
interface card, install D.6

L

labels, print 2.16
Linux
    common problems 7.30
    configuration tool B.8
    driver, install B.2
    LLPR properties B.10
load, paper
    in the Multi-Purpose Tray 2.9
    in the optional Tray2 2.8
    in the Tray1 2.4
    using the manual feed 2.12

M

Macintosh
    common problems 7.29
    desktop printer, create A.4
    document, print A.5
    drive, install A.3
    system requirements A.2
manual feed mode, use 2.12
memory DIMM, install D.2
memory DIMM, remove D.5
Multi-Purpose Tray, use 2.9

N

network interface card, install D.6
network printing
    card, install D.6
    locally shared printer, set C.3
    network-connected printer, set C.6
    parameters, configure C.6
n-up printing 4.6

O

option, install
    memory DIMM D.2
    network interface card D.6
    paper tray 2 D.10
optional tray, install D.10
orientation, select 3.6
overlay, use 4.13

P

paper
    choose 2.2
    guideline 2.3
    load 2.4
    sizes and capacities 2.2
    specifications E.3
paper jam
    in the duplex area 7.13
    in the Multi-Purpose Tray 7.8
    in the optional Tray 2 7.16
    in the paper exit area 7.10
    in the paper feed area 7.6
    inside the printer 7.9
    tips for avoiding 7.19
paper properties, set 3.7
paper size, change in the tray 2.7
paper size, set 3.7
paper size,set 3.7
paper source, set 3.8
paper type, set 3.8
poster printing 4.7
preprinted paper, print 2.19
print order, set 3.12
print quality problems 7.20
print quality problems, solve 7.20
print resolution, set 3.9
printer software
    install
        in Linux B.2
        in Macintosh A.3
    uninstall
        in Linux B.7
printing
    booklets 4.9
    configuration page 6.2
    double-sided 4.2
    fitting to a selected paper 4.5
    from Macintosh A.5
    from Windows 3.3
    multiple pages on one sheet 4.6
    posters 4.7
    reduced/enlarged document 4.4
    using overlays 4.13
    watermarks 4.10
printing problems 7.3
problem, solving
    checklist 7.2
    error messages 7.24
    general 7.3
    Linux 7.30
    Macintosh 7.29
    paper jams 7.6
    print quality 7.20
    Windows 7.28

Q

quality problems, solve 7.20

R

replace
    drum cartridge 6.13
    image transfer unit 6.21
    toner cartridge 6.7
    waste toner container 6.10

S

software
    Macintosh A.2
specification
    paper E.3
    printer E.2
system requirements
    for Linux B.2
    for Macintosh A.2

T

toner cartridge
    maintain 6.4
    redistribute 6.5, 6.7
    replace 6.7
    toner remain, check 6.4
transfer, replace 6.21
transparencies, print 2.17
Tray1, use 2.4

U

uninstall
    Linux B.7

W

waste toner container, replace 6.10
watermarks, use 4.10

Home

Visit us at:
www.samsungprinter.com

Rev.0.06