SAMSUNG

COLOR LASER PRINTER

Setup Guide

CLP-550
CLP-550N

For UK customers:

To reorder your consumables
Call 0800 3164060

For Technical Assistance
Call 0870 2420303

SAMSUNG

COLOR LASER PRINTER

Setup Guide

CLP-550
CLP-550N

CONTENTS

Step 1. **Unpacking 3**

Step 2. **Understanding Your Printer 5**

Step 3. **Installing the Imaging Unit, Transfer Belt and Toner Cartridges 7**

Step 4. **Loading Paper 16**

Step 5. **Connecting a Printer Cable 19**

Using a Parallel Cable 19
Using a USB Cable 20
For Networking Printing 21

Step 6. **Turning the Printer On 22**

Step 7. **Printing a Demo Page 23**

Step 8. **Changing the Display Language 23**

Step 9. **Installing the Printer Software 24**

Installing Printer Software in Windows 24
Reinstalling Printer software 26
Removing Printer software 26
Changing the Display Language 26

Step 10. **Viewing the User's Guide 27**

In Windows 27
In Macintosh 27
In Linux 28

Step 1. Unpacking

1 Remove the printer and all of the accessories from the packing carton. Make sure that the printer has been packed with the following items:

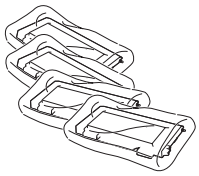

Toner Cartridges

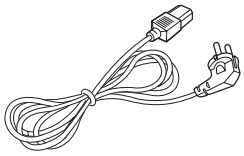

Power Cord

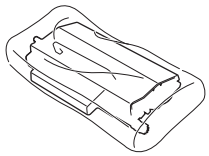

Transfer Belt

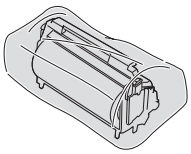

Imaging Unit

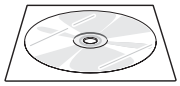

CD-ROM

Setup Guide

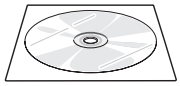

SyncThru CD-ROM
(CLP-550N only)

SyncThru Quick Guide
(CLP-550N only)

NOTES:

- If any items are missing or damaged, notify your dealer immediately.
- **Components may differ from one country to another.**
- The CD-ROM contains the printer driver, the User's Guide, and the Adobe Acrobat Reader program.
- The power cord may be different depending on your country.

CAUTION: This printer weighs 35kg including developer cartridge and cassette. Use safe lifting and handling techniques. If you need to move the printer it must be moved by two people. Use the lifting handles located as shown in the diagram (see page 5). Back injury could be caused if a single person attempts to lift the printer.

2 Carefully remove all of the packing tapes from the printer.

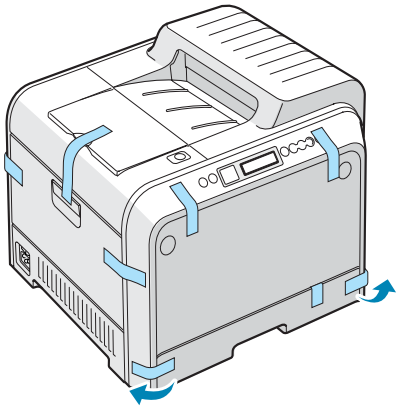

3 Pull the paper tray out of the printer and remove the packing tapes from the tray.

4 Select a location for the printer:

- Leave enough room to open the printer trays, covers, and allow for proper ventilation.
- Provide the proper environment:
  - A firm, level surface
  - Away from direct airflow of air conditioners, heaters, or ventilators
  - Free of temperature, sunlight, or humidity extremes or fluctuations
  - Clean, dry, and free of dust

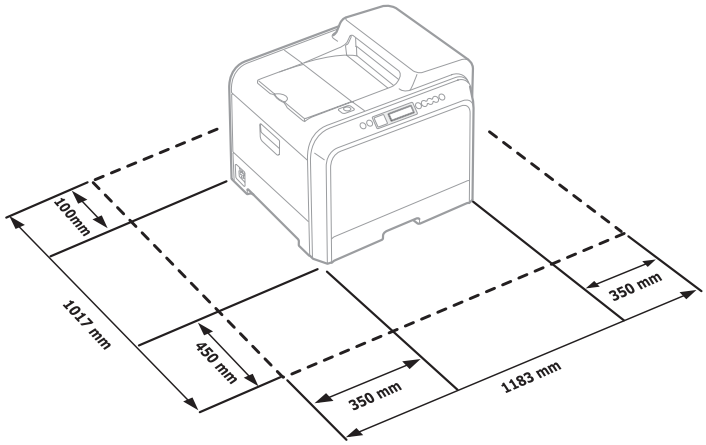

CAUTION: You must place your printer in the level surface. If you do not, the print quality problems can occur.

Step 2. Understanding Your Printer

These are the main components of your printer:

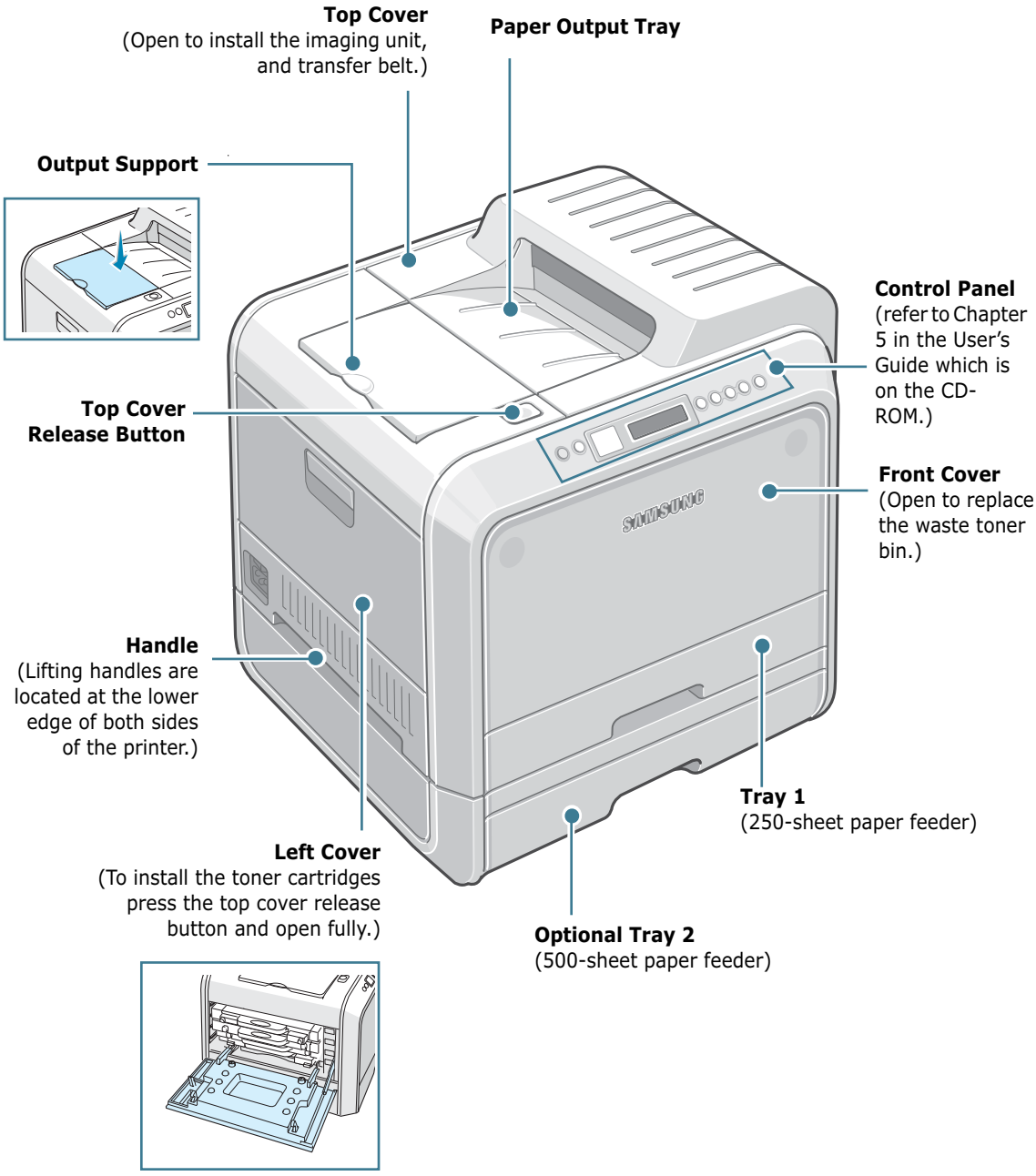

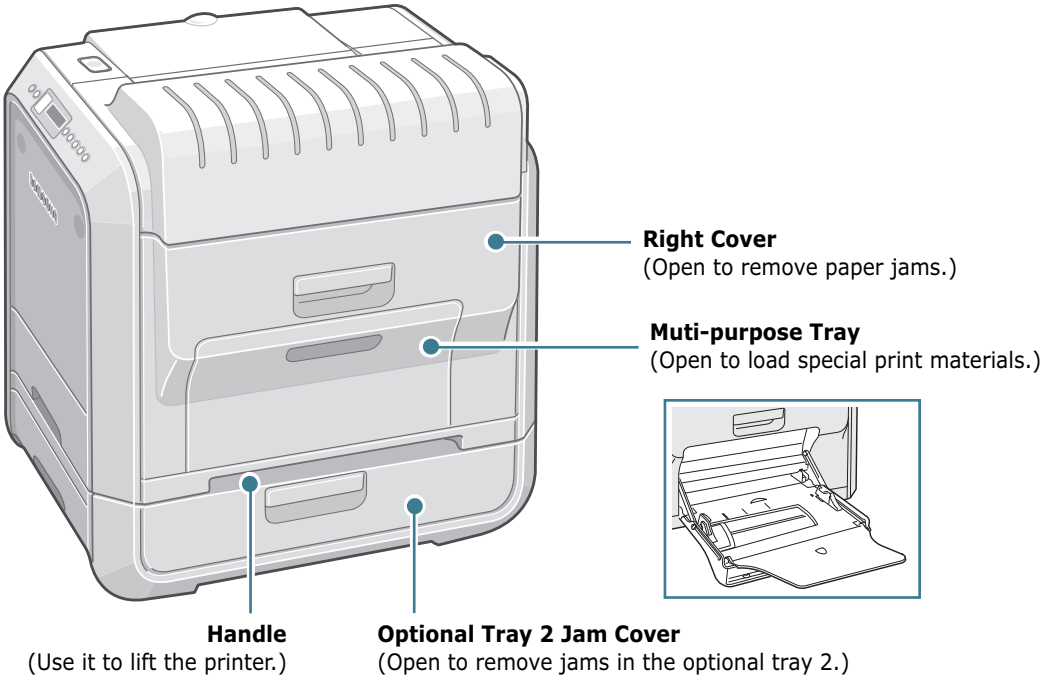

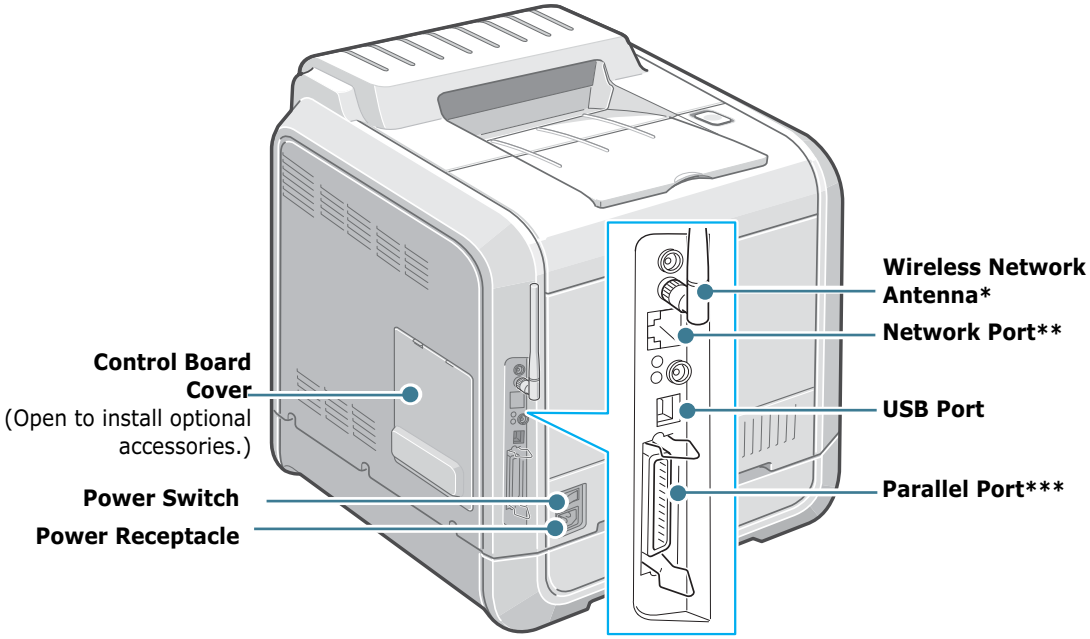

** This wireless network port is not supplied with the printer. It is an option that must be purchased and installed separately.*

*** The network port is fitted as standard on the CLP-550N. CLP-550 users can purchase and install separately an optional Network Card. For details, see the User's Guide of the printer in the CD-ROM.*

**** The parallel port may not be available depending on your country.*

Step 3. Installing the Imaging Unit, Transfer Belt and Toner Cartridges

1 Using the handle, completely open the left cover until it is at right angles to the main frame.

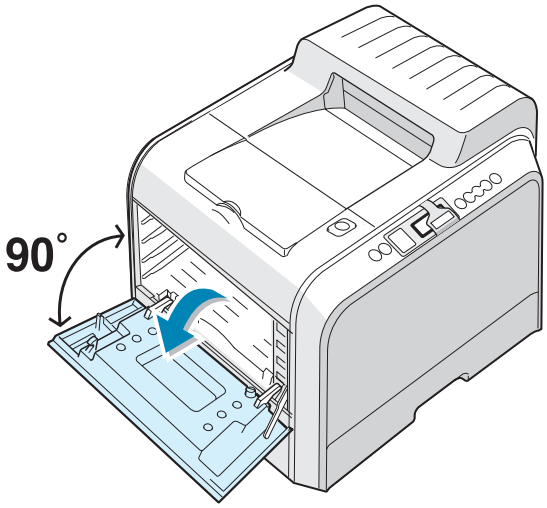

CAUTION: If the left cover is not completely open, the top cover release button does not press.

2 Press the top cover release button to unlatch the top cover and open it all the way.

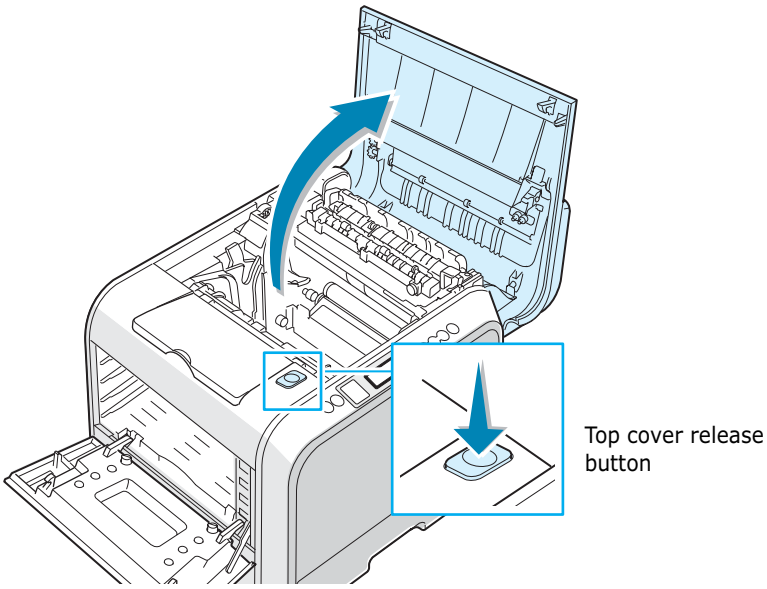

3 Take the imaging unit out of the package using the handle.

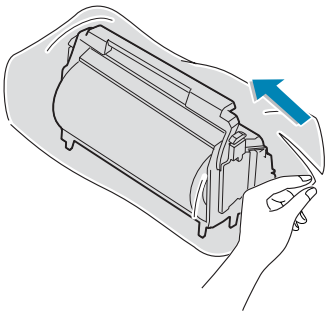

4 Remove the paper covering the imaging unit by removing the tape under the handle of the imaging unit.

CAUTIONS:

- Do not use sharp objects, such as a knife or scissors, to open the imaging unit package and tape on the protective paper liner. You could damage the surface of the imaging unit.
- To prevent damage, do not expose the imaging unit to light for more than a few minutes. Cover it with black paper, if necessary.
- Do not touch the surface of the green roller on the imaging unit or print quality problems can occur.

5 Locate the imaging unit slots inside the printer, one on each side.

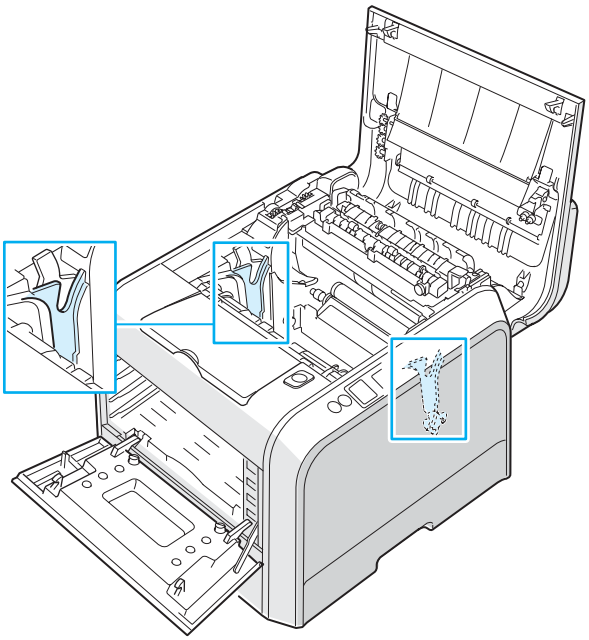

6 Hold the handle on the imaging unit with the green roller facing you. Align the imaging unit with the slots in your printer so that the colors on both sides of the imaging unit slide into the corresponding colors of the slots.

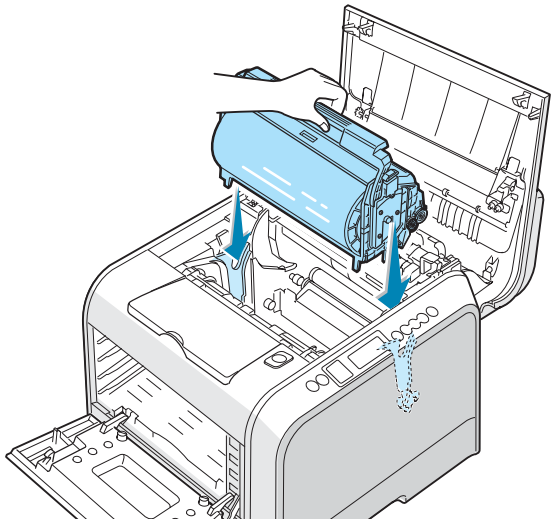

CAUTION: Insert the imaging unit carefully so as not to scratch and damage the surface of the green roller.

7 Slide the imaging unit down into the printer until it cannot be pushed in any further and fold the handle down.

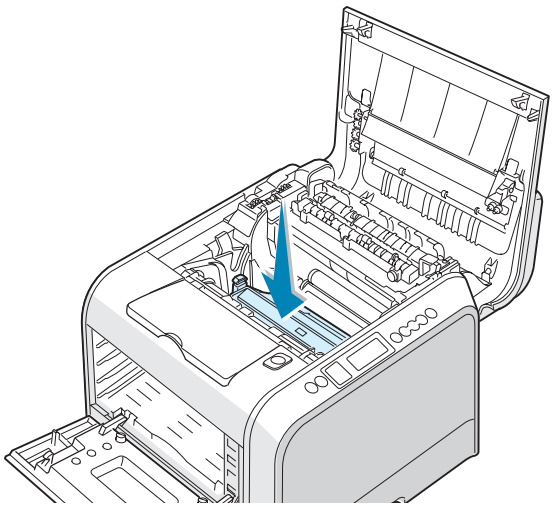

CAUTION: To prevent damage, do not expose the imaging unit to light for more than a few minutes. Close the top and left cover should the setup need to be halted for any reason.

8 Take the transfer belt out of the package.

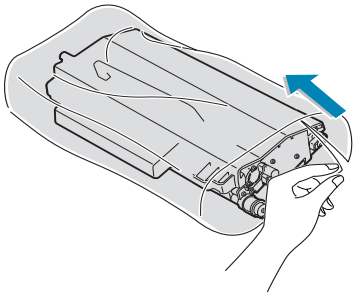

9 Remove the paper covering the transfer belt by removing the tape.

CAUTION: Don't use sharp objects, such as a knife or scissors, to open the transfer belt package. You could damage the surface of the transfer belt.

10 Pinch the transfer belt tention levers on both sides of the transfer belt. Then, pull them out, as shown below.

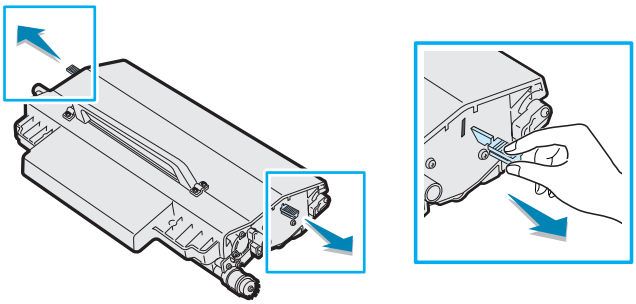

11 Locate the transfer belt slots inside the printer, one on each side.

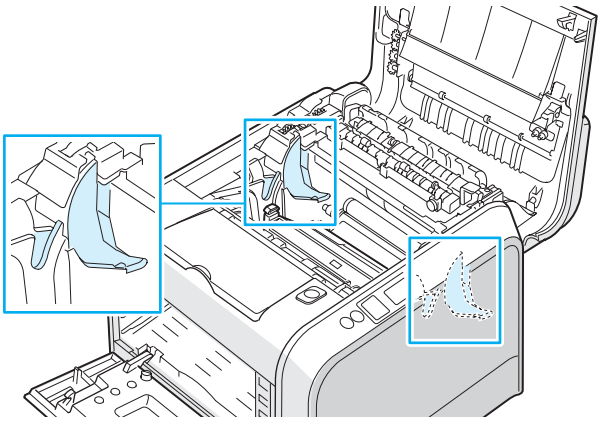

12 Hold the handle on the transfer belt and align it with the slots in your printer.

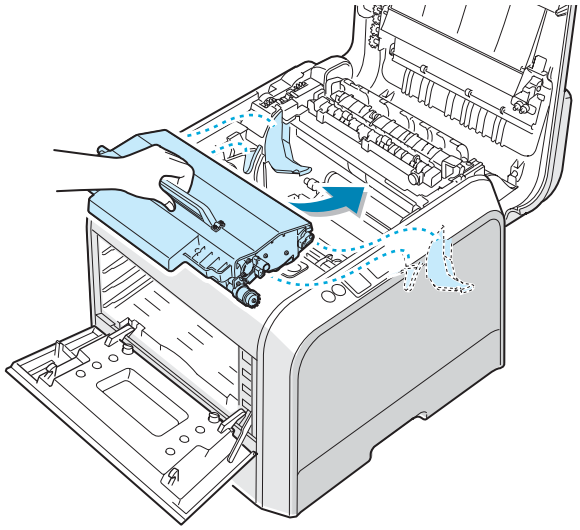

NOTE: Keep the transfer belt level, do not turn the transfer belt over otherwise looses toner may be spilled.

13 Slide the transfer belt down into the printer. Press it firmly to make sure that it latches into place.

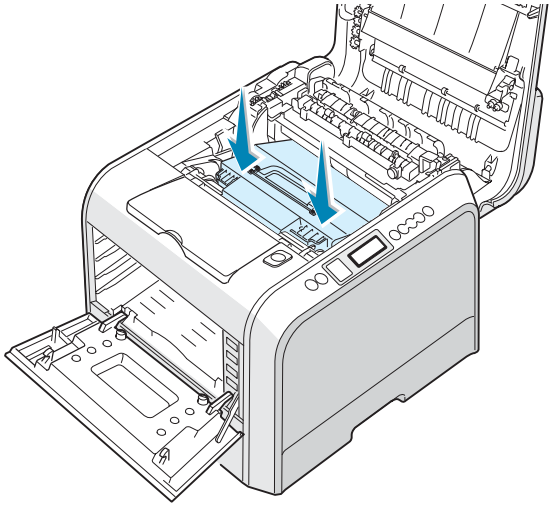

14 Firmly push the lock levers on each side towards the top cover, as shown below, to lock the transfer belt into place.

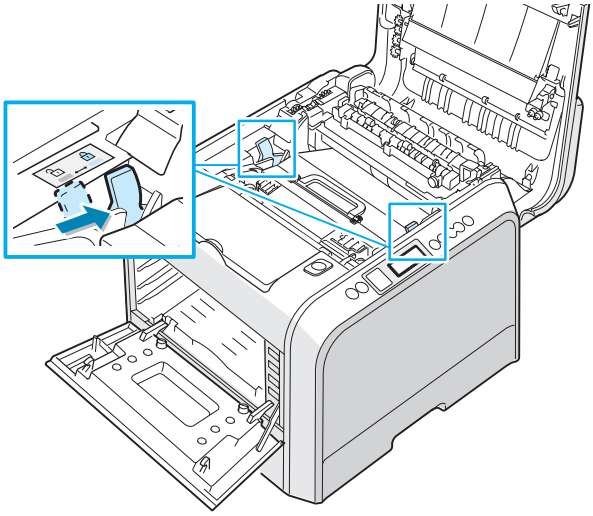

CAUTION: If you open the left cover for a few minutes, the imaging unit can be exposed to light. This causes damage to the imaging unit.

15 After making sure that the left cover is open, close the top cover. Make sure that it is securely latched.

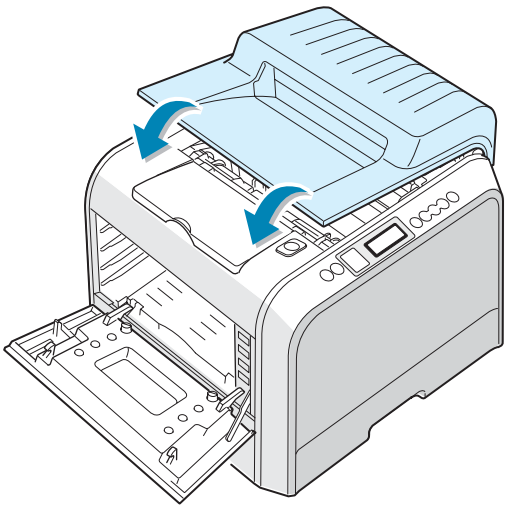

CAUTION: Do not try to close the left cover with the top cover open. This may cause damage to the printer.

16 Take the toner cartridges out of their packages.

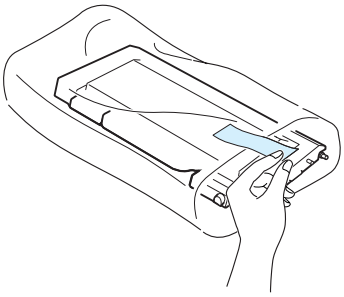

CAUTION: Do not use sharp objects, such as a knife or scissors, to open the toner cartridges packages. You could damage the surface of the toner cartridges.

17 Holding both sides of the cartridges, gently roll them from side to side to distribute the toner.

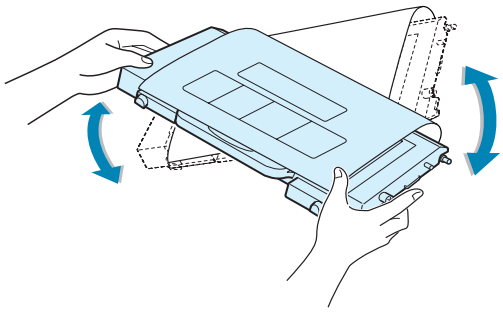

18 Place the toner cartridges on a flat surface as shown and remove the paper covering the toner cartridge by removing the tape.

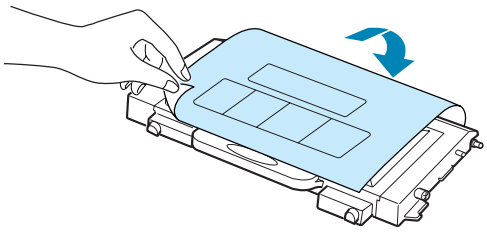

NOTE: If toner gets on your clothing, wipe it off with a dry cloth and wash it in cold water. Hot water sets toner into fabric.

19 On the right hand side of the toner cartridge slot is a label that identifies which color cartridge to fit into each slot.

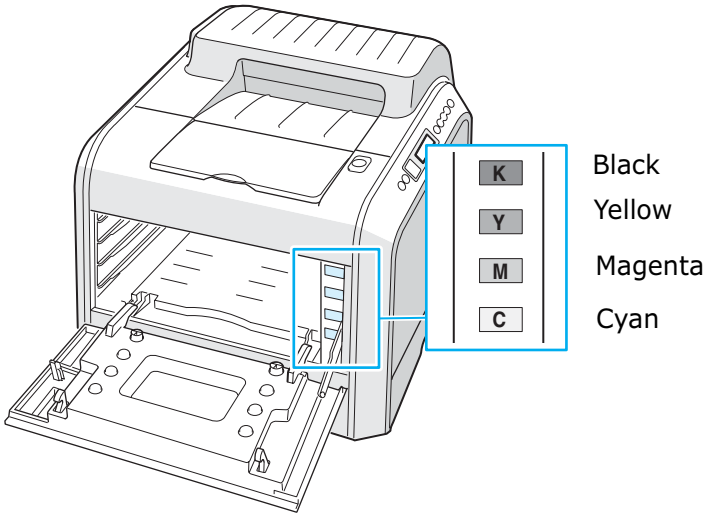

20 Holding each toner cartridge, insert them into their corresponding positions shown in order of Cyan, Magenta, Yellow and then Black. Using both hands, grip the cartridge to insert into the slot. Then hold the handle to slide the cartridge in.

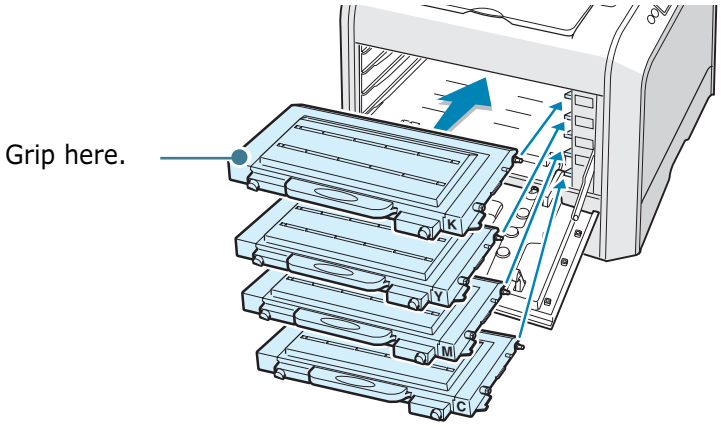

- When the toner cartridges are correctly installed the yellow and black cartridges are not fully inserted. These will be pushed into place when you close the left cover.

21 Close the left cover. Make sure that it is securely latched.

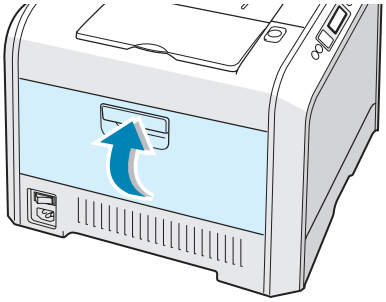

If you have installed the toner cartridges wrongly, the left cover will not close properly. Check again to make sure the cartridge colors correspond to those marked on the right hand side. Never use force to close the cover.

NOTE: When printing text at 5% coverage, you can expect a toner cartridge life of about 7,000 pages for black and 5,000 pages for color. However, the toner cartridge that is shipped with the printer prints 2,000 pages for black and white, 1,500 pages for color.

English

Step 4. Loading Paper

The tray (Tray 1) can hold a maximum of 250 sheets of plain paper. You can use A4 and letter-sized paper.

To load paper:

1 Pull the tray out of the printer.

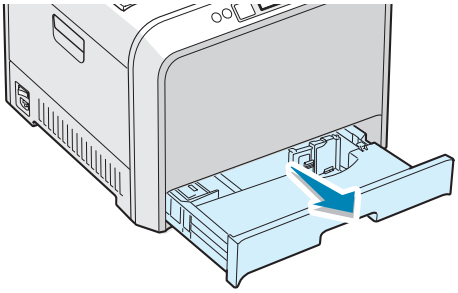

2 Push down on the metal plate until it locks into position.

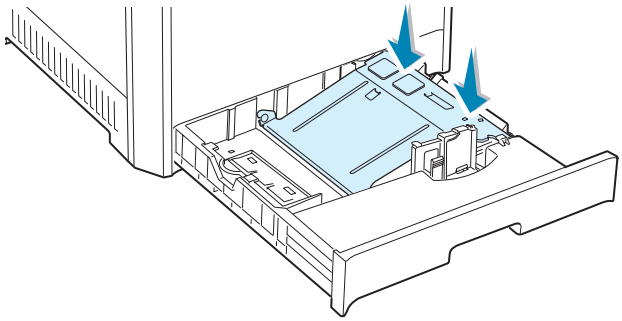

3 Flex the paper sheets back and forth to separate the pages and then fan them while holding one edge. Tap the edges of the stack on a flat surface to even it up.

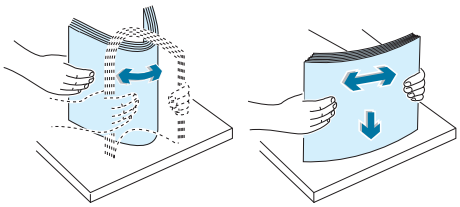

4 Load paper **with the print side facing up**.

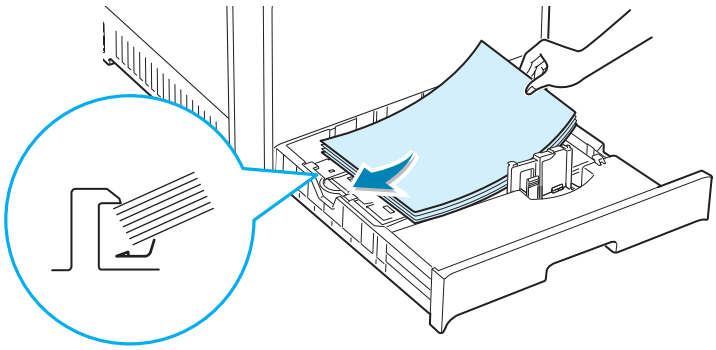

Make sure that all four corners are flat in the tray and under the corner brackets as shown below.

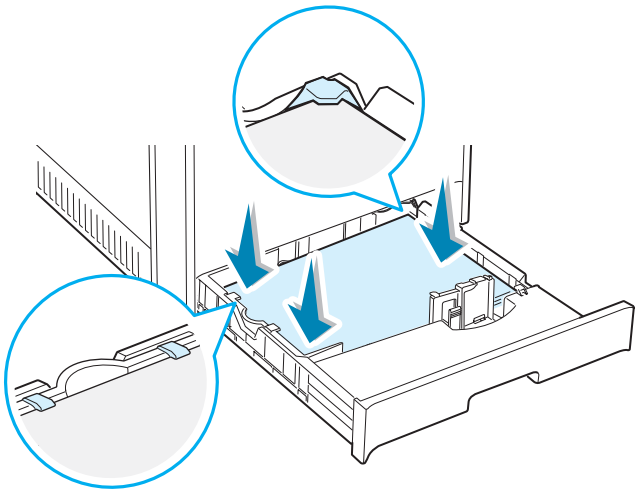

5 Do not exceed the maximum stack height. Overfilling the tray may cause a paper jam.

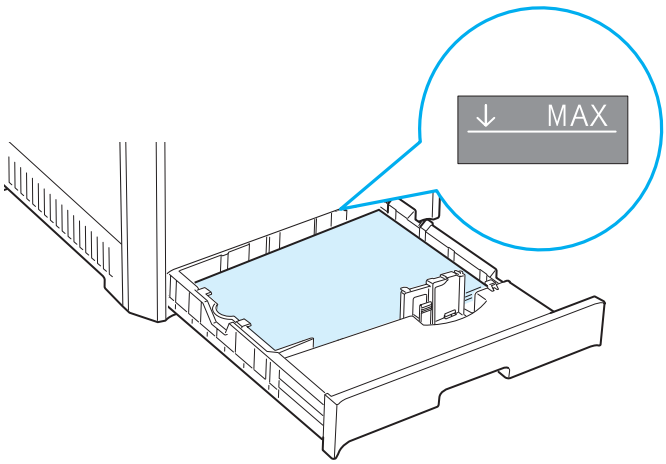

6 Pinch the paper guide as shown and move it toward the paper until it lightly touches the side of the stack. Do not press the guide too tightly against the edge of the paper; the guide may bend the paper.

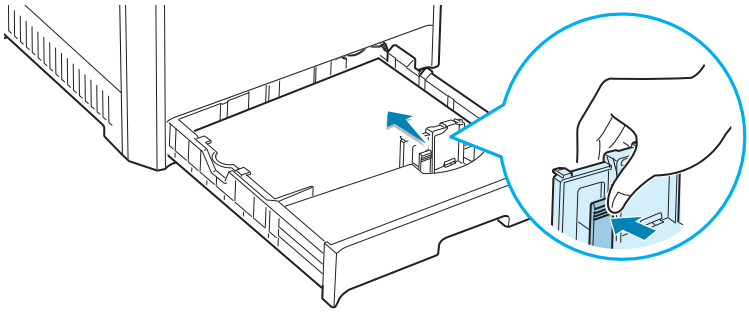

NOTE: If you want to change the paper size in the tray, refer to the User's Guide of your printer supplied in the CD-ROM.

7 Slide the tray back into the printer.

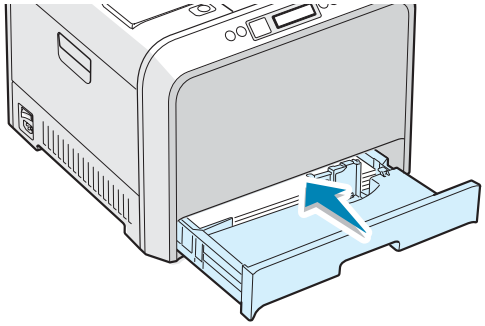

NOTES:

- Do not push the width guide far enough to cause the material to warp.
- If you do not adjust the width guide, it may cause paper jam.

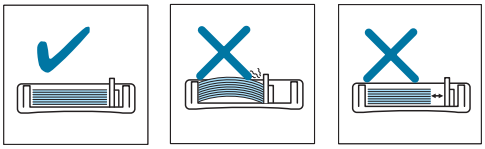

Step 5. Connecting a Printer Cable

You need to connect your printer to the computer with either a parallel interface cable or a Universal Serial Bus (USB) cable.

If you are a Macintosh user, you can use only a USB cable.

NOTE: The CLP-550N does not support printing from a Macintosh using a network connection.

Using a Parallel Cable

NOTES:

- The parallel port may not be available depending on your country.
- To connect the printer to the parallel port of the computer requires a certified parallel cable. You need to buy a IEEE1284 compliant cable that is within 3m in length.

1. Make sure that both the printer and the computer are turned off.

2. Plug the parallel printer cable into the connector on the back of the printer.

   Push the metal clips down to fit inside the notches on the cable plug.

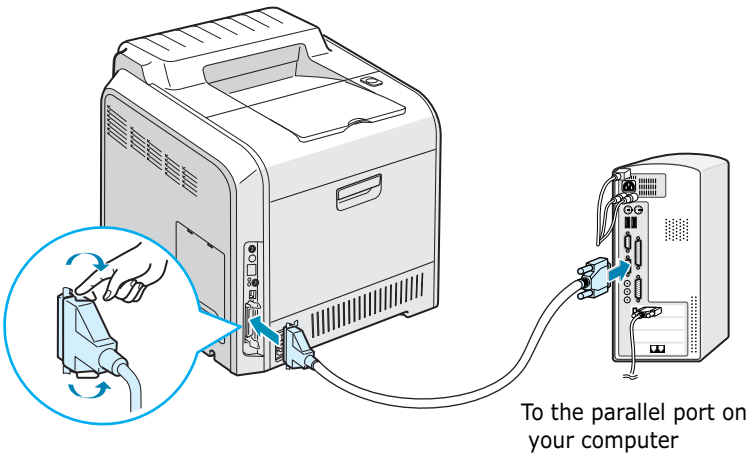

3. Connect the other end of the cable to the parallel interface port on your computer, and tighten the screws.

   See the User's Guide of your computer, if you need help.

Using a USB Cable

NOTE: Connecting the printer to the USB port of the computer requires a certified USB cable. You will need to buy a USB 2.0 compliant cable that is within 3m in length.

1 Make sure that both the printer and the computer are turned off.

2 Plug the USB printer cable into the connector on the back of the printer.

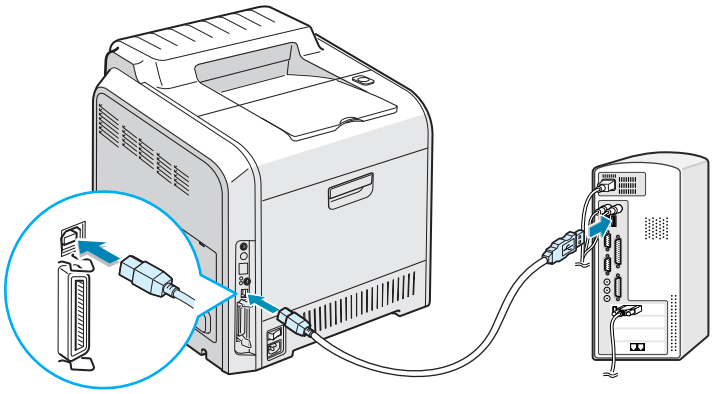

3 Connect the other end of the cable to the USB port on your computer.

See the User's Guide of your computer, if you need help.

NOTE: To print using the USB interface, you must run Windows 98/Me/2000/XP, or Macintosh with OS 8.6 and the G3 processor or higher.

For Networking Printing

You can attach your CLP-550 or CLP-550N printer to a network using an Ethernet cable (UTP cable with RJ.45 connector).

CLP-550N has a built-in network interface card. If you are a CLP-550 user, you need to install an optional network interface card.

If you want to use the printer in both a wired and a wireless network environments, you need to install an optional wired/ wireless network interface card. For details about installing the card, see the User's Guide of your printer in the CD-ROM.

Using an Ethernet cable

1 Make sure that both the printer and the computer are turned off.

2 Plug one end of the Ethernet cable into the Ethernet network port on the Printer.

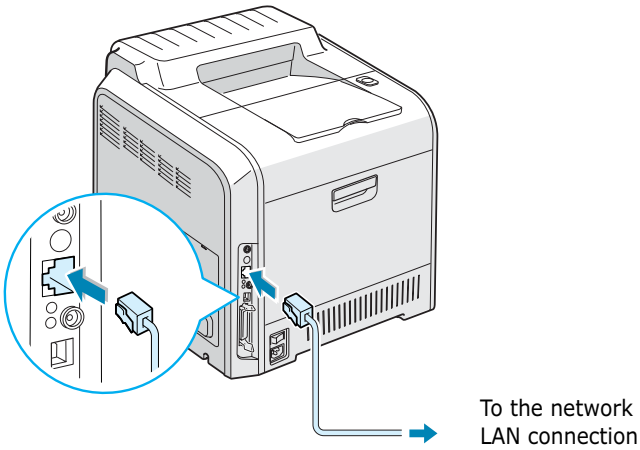

3 Plug the other end of the cable into a network LAN connection.

For details about installing the network card, see the User's Guide of your printer in the CD-ROM.

Using a network antenna

1 If you install the wired/wireless network card, you can use your printer in wireless environment.

For details about installing the wired/wireless network card, see the User's Guide of your printer in the CD-ROM.

NOTE: After connecting the printer you need to configure the network parameters on the control panel. See the User's Guide of your printer. You can use the software supplied with the card. Refer to the software User's Guide.

Step 6. Turning the Printer On

1 Plug the power cord into the power receptacle on the back of the printer.

2 Plug the other end into a properly grounded AC outlet and turn on the power.

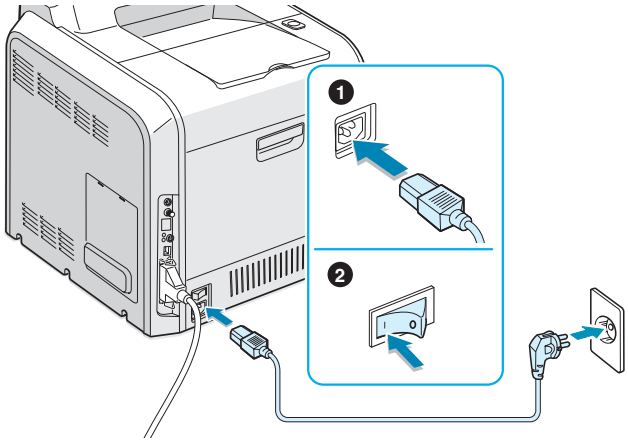

CAUTIONS:

- Some parts inside of the printer may be hot when power is on or after printing. Be careful not to burn yourself when working inside the printer.
- Do not disassemble the printer when it is powered on. Doing so may give you an electric shock.

Step 7. Printing a Demo Page

Print a demo page to make sure that the printer is operating correctly.

1 In ready mode, press and hold the **Upper Level** button ( ) on the control panel for 2 seconds to print a demo page.

A demo page showing the printer's features and capabilities prints out.

Step 8. Changing the Display Language

To change the language that is displayed on the control panel, take the following steps:

1 In ready mode press the **Menu** button ( ) on the control panel until you see 'Setup' on the bottom line of the display.

2 Press the **Enter** button ( ) to access the menu.

3 Press the scroll button (or) until you see 'LCD Language' on the bottom line.

4 Press the **Enter** button ( ) to confirm the menu item.

5 Press the scroll button (or) to display the language you want to use.

6 Press the **Enter** button ( ) to save the selection.

7 Press the **On Line/Continue** button ( ) to return to ready mode.

Step 9. Installing the Printer Software

The supplied CD-ROM contains Windows printing software, Macintosh printing software, Linux printing software, on-line User's Guide and Acrobat Reader to view the User's Guide.

If you are printing from Windows:

You can install the following printer software using the CD-ROM.

- **Printer Driver** for windows. Use this driver to take full advantage of your printer's features. See page 25.
- **USB driver** only for Windows 98/Me/2000/XP. For details about installing the USB driver, see page 25.

If you are printing from Macintosh:

For information about installing the print software and printing from a Macintosh, refer to Appendix A in the User's Guide. To view the User's Guide, see page 27.

If you are printing in Linux:

For information about installing the Linux driver, refer to Appendix B in the User's Guide. To view the User's Guide, see page 28.

Installing Printer Software in Windows

Verify the following before you install the printer software:

Item	Requirements	
Operating system	Windows 95/98/Me/NT 4.0/2000/XP	
RAM	95/98/Me	32 MB
	NT 4.0/2000	64 MB
	XP	128 MB
Free disk space	95/98/Me/NT 4.0/ 2000/XP	200 MB
Internet Explorer	5.0 or higher	

NOTE: For Windows NT 4.0/2000/XP, the system administrator should install the software.

All applications should be closed on your PC before beginning installation.

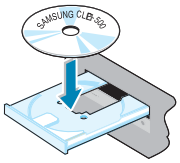

1 Place the CD-ROM in the CD-ROM drive. Installation will start automatically.

If the CD-ROM drive does not automatically run:

Select **Run** from the **Start** menu, and type **x:\cdsetup.exe** in the Open box (where **x** is the drive letter for the CD-ROM drive), then click **OK**.

NOTE: If the **New Hardware Found** window appears during the installation procedure, click ☒ in the upper right corner of the box, or click **Cancel**.

2 When the language selection window appears, select the appropriate language.

If you can't find the desired language from the screen, scroll through the screen using the scroll button on the bottom right of the screen.

3 Click **Install the Samsung Software on your PC.**

4 The installation window opens. Click **Next**.

5 Follow the instructions on the window to complete the installation.

NOTE: If you connect the printer with the USB cable at first and then you want to use the parallel interface, remove the USB cable and connect the parallel cable. Then reinstall the printer driver.

Reinstalling Printer software

Reinstallation is required if your installation fails.

1. From the **Start** menu, select **Programs**.
2. Select **Samsung CLP-550 Series**, and then **Samsung CLP-550 Series Driver Maintenance**.
3. The Samsung CLP-550 Series Driver Maintenance window appears. Click **Repair** and then click **Next**.
4. When reinstallation is done, click **Finish**.

Removing Printer software

1. From the **Start** menu, select **Programs**.
2. Select **Samsung CLP-550 Series**, and then **Samsung CLP-550550 Series Driver Maintenance**.
3. The Samsung CLP-550 Series Driver Maintenance window appears. Check **Remove** and then click **Next**.
4. When you are asked to confirm your selection, click **OK**.

   The Samsung CLP-550 Series printer driver and all of its components are removed from your computer.
5. When removing is completed, click **Finish**.

Changing the Display Language

After installation of the software, you can change the display language.

1. From the **Start** menu, select **Programs**.
2. Select **Samsung CLP-550 Series**, and **Language Selection**.
3. Select the desired language from the language selection window, and click **OK**.

Step 10. Viewing the User's Guide

The Samsung CLP-550 Series User's Guide, which is in the software CD-ROM, is in Adobe Acrobat PDF format. The manual will give you flexibility and convenience when you have to access information.

You can view the manuals on-screen in different formats (viewing a single page, continuous single page or continuous facing page, zooming in up to 1600% or out up to 12.5%, scrolling two-up page or article flow). You can also print the manual, if necessary.

In Windows

1. Place the CD-ROM in the CD-ROM drive.
2. When the language selection window appears, select the appropriate language.
3. Click **View User's Guide**.

   The Adobe Acrobat program opens and you can view the User's Guide.

NOTE: To open the User's Guide, you should install the Adobe Acrobat Reader program on your computer. If you do not have the program, click **Install the Bonus Software on your PC** to install the program.

In Macintosh

1. Place the CD-ROM in the CD-ROM drive.
2. Double-click **SAMSUNG_CLP** on your Macintosh desktop.
3. Double-click **User's Guide** folder.
4. Double-click **User's Guide.pdf(language)**. The Adobe Acrobat programme opens and you can view the User's Guide.

In Linux

1 When the Administrator Login window appears, type in "**root**" in the login field and enter the system password.

2 Insert the printer software CD-ROM.

3 Click the icon at the bottom of the screen. When the terminal screen appears, type in:
[root@local /root]# **cd /mnt/cdrom**(the CD-ROM directory) ↵
[root@local cdrom]# **gv manual/EnGuide.pdf** ↵

NOTE: If your ghostscript version is old, you may not be able to see the pdf file. Then, install Acrobat Reader on your system or try to read the User's Guide on a Windows system.

1. Click the icon at the bottom of the screen. When the terminal screen appears, type in:
   [root@local /root]**# cd /mnt/cdrom**(the CD-ROM directory) ↵
   [root@local cdrom]**# manual/acrobat4/INSTALL** ↵
2. After reading the license agreement, type **accept** ↵.
3. When you are asked of the installation directory, just type the enter key.
4. You need to make a symbolic link to execute Acrobat Reader without full path:
   [root@local cdrom] **# ln -s/ usr/local/acrobat4/bin/ acroread /usr/bin/acroread** ↵
5. Now, you can read the pdf files with Acrobat Reader.
   [root@local cdrom]# **acroread /mnt/cdrom/manual/ EnGuide.pdf** ↵

Home

Visit us at:
www.samsungprinter.com

Rev.0.01

SAMSUNG

COLOR LASER PRINTER

User's Guide

CLP-550
CLP-550N

For UK customers:

To reorder your consumables
Call 0800 3164060

For Technical Assistance
Call 0870 2420303

This manual is provided for information purposes only. All information included herein is subject to change without notice. Samsung Electronics is not responsible for any changes, direct or indirect, arising from or related to use of this manual.

© 2003 Samsung Electronics Co., Ltd. All rights reserved.

- CLP-550, CLP-550N and Samsung logo are trademarks of Samsung Electronics Co., Ltd.
- Centronics is a trademark of Centronics Data Computer Corporation.
- IBM and IBM PC are trademarks of International Business Machines Corporation.
- Apple, AppleTalk, TrueType, Laser Writer and Macintosh are trademarks of Apple Computer, Inc.
- Microsoft, Windows, Windows 9x, Window Me, Windows 2000, Windows NT 4.0 and Windows XP are registered trademarks of Microsoft Corporation.
- All other brand or product names are trademarks of their respective companies or organizations.

CONTENTS

Chapter 1 : Introduction

Special Features 1.2

Printer Components 1.4
Front View 1.4
Right View 1.5
Rear View 1.6

Chapter 2 : Using the Control Panel

Understanding the Control Panel 2.2
Display 2.2
Buttons 2.3

Using Control Panel Menus 2.5
Accessing Control Panel Menus 2.5
Overview of Control Panel Menus 2.6
Information Menu 2.6
Layout Menu 2.7
Printer Menu 2.8
Color Menu 2.9
Setup Menu 2.9
Network Menu 2.12

Chapter 3 : Using Print Materials

Choosing Paper and Other Materials 3.2
Sizes and Capacities 3.2
Guidelines for Paper and Special Materials 3.3

Loading Paper 3.4
Using Tray 1 ..... 3.4
Changing the Paper Size in the Tray 3.7
Using the Optional Tray 2 ..... 3.8
Using the Multi-purpose Tray 3.9
Using the Manual Feed 3.12

Printing on Special Print Materials 3.14
Printing on Envelopes 3.14
Printing on Labels 3.16
Printing on Transparencies 3.17
Printing on Preprinted Paper 3.20
Printing on Card Stock or Custom-sized Materials ... 3.21

Chapter 4 : Printing Tasks

Printer Driver Features 4.2

Printing a Document 4.3
Canceling a Print Job 4.4

Printer Settings 4.5
Layout tab 4.6
Paper tab 4.7
Graphics tab 4.9
Extras tab 4.12
About tab 4.13
Using a Favorite Setting 4.13
Using Help 4.14

Chapter 5 : Advanced Printing

Printing on Both Sides of the Paper 5.2

Scaling Your Document 5.4

Fitting Your Document to a Selected Paper Size 5.5

Printing Multiple Pages on One Sheet of the Paper ... 5.6

Printing Posters 5.7

Printing Booklets 5.9

Using Watermarks 5.10
Using an Existing Watermark 5.10
Creating a Watermark 5.11
Editing a Watermark 5.12
Deleting a Watermark 5.12

Using Overlays 5.13
What is an Overlay? 5.13
Creating a New Page Overlay 5.13
Using a Page Overlay 5.15
Deleting a Page Overlay 5.16

Chapter 6 : Maintaining Your Printer

Printing a Configuration Page 6.2

Replacing the Supplies 6.3

Managing the Toner Cartridges 6.4
Toner Cartridge Storage 6.4
Toner Cartridge Life Expectancy 6.4
Checking the Remaining Toner 6.4
Redistributing the Toner 6.5

Replacing the Toner Cartridges 6.8

Replacing the Waste Toner Container 6.11

Replacing the Imaging Unit 6.14

Replacing the Transfer Belt 6.22

Cleaning the Printer 6.29
Cleaning the Outside of the Printer 6.29
Cleaning the LSU Inside the Printer 6.30
Cleaning the Inside of the Printer 6.31

Replacement Part 6.38

Chapter 7 : Solving Problems

Troubleshooting Checklist 7.2

Solving General Printing Problems 7.3

Clearing Paper Jams 7.7
In the Paper Feed Area 7.8
In the Multi-purpose Tray 7.10
Inside the Printer 7.10
In the Paper Exit Area 7.11
In the Duplex Area 7.14
In the Optional Tray2 ..... 7.18
Tips for Avoiding Paper Jams 7.21

Solving Print Quality Problems 7.22

Understanding Display Messages 7.26

Common Windows Problems 7.30

Common Macintosh Problems 7.31
Problems in the Chooser 7.31
Printing Errors 7.31

Common Linux Problems 7.32

Appendix A : Using Your Printer with a Macintosh

Installing Software for Macintosh A.2
System Requirements A.2
Installing Software A.3
Choosing Your Printer A.5

Printing a Document A.6

Using Advanced Printing Features A.8
Mac OS 8.6 ~ 9.x A.8
Mac OS 10.x A.11

Appendix B : Using Your Printer in Linux

Installing the Printer Driver B.2
System Requirements B.2
Installing the Printer Driver B.2
Changing the Printer Connection Method B.6
Uninstalling the Printer Driver B.7

Using the Configuration Tool B.8

Changing LLPR Properties B.10

Appendix C : Using Your Printer on a Network

About Sharing the Printer on a Network C.2

Setting Up a Locally Shared Printer C.3
In Windows 95/98/Me C.3
In Windows NT 4.0/2000/XP C.4

Setting Up a Network-Connected Printer C.6
Configuring Network Parameters on the Control Panel C.6

Appendix D : Installing Printer Options

Installing Printer Memory D.2
Removing the Memory D.6

Installing a Network Interface Card D.7

Installing an Optional Tray D.12

Appendix E : Specifications

Printer Specifications E.2

Paper Specifications E.3

Overview E.3
Supported Sizes of Paper E.4
Guidelines for Using Paper E.5
Paper Specifications E.6
Paper Output Capacity E.6
Paper Input Capacity E.6
Printer and Paper Storage Environment E.7
Envelopes E.8
Labels E.10
Transparencies E.10

Environmental and Safety Consideration

Laser Safety Statement

The printer is certified in the U.S. to conform to the requirements of DHHS 21 CFR, chapter 1 Subchapter J for Class I(1) laser products, and elsewhere, is certified as a Class I laser product conforming to the requirements of IEC 825.

Class I laser products are not considered to be hazardous. The laser system and printer are designed so there is never any human access to laser radiation above a Class I level during normal operation, user maintenance, or prescribed service condition.

WARNING
Never operate or service the printer with the protective cover removed from Laser/ Scanner assembly. The reflected beam, although invisible, can damage your eyes. When using this product, these basic safety precautions should always be followed to reduce risk of fire, electric shock, and injury to persons:

CAUTION - INVISIBLE LASER RADIATION WHEN THIS COVER OPEN. DO NOT OPEN THIS COVER.

VORSICHT - UNSICHTBARE LASERSTRAHLUNG, WENN ABDECKUNG GEÖFFNET. NICHT DEM STRAHL AUSSETZEN.

ATTENTION - RAYONNEMENT LASER INVISIBLE EN CAS D'OUVERTURE. EXPOSITION DANGEREUSE AU FAISCEAU.

ATTENZIONE - RADIAZIONE LASER INVISIBILE IN CASO DI APERTURA. EVITARE L'ESPOSIZIONE AL FASCIO.

PRECAUCIÓN - RADIACIÓN LASER INVISIBLE CUANDO SE ABRE. EVITAR EXPONERSE AL RAYO.

PERIGO - RADIAÇÃO LASER INVISÍVEL AO ABRIR. EVITE EXPOSIÇÃO DIRECTA AO FEIXE.

GEVAAR - ONZICHTBARE LASERSTRALEN BIJ GEOPENDE KLEP. DEZE KLEP NIET OPENEN.

ADVARSEL. - USYNLIG LASERSTRÅLNING VED ÅBNING, NÅR SIKKERHEDSBRYDERE ER UDE AF FUNKTION. UNDGÅ UDSAETTELSE FOR STRÅLNING.

ADVARSEL. - USYNLIG LASERSTRÅLNING NÅR DEKSEL ÅPNES. STIRR IKKE INN I STRÅLEN. UNNGÅ EKSPONERING FOR STRÅLEN.

VARNING - OSYNLIG LASERSTRÅLNING NÄR DENNA DEL ÄR ÖPPEN OCH SPÄRREN ÄR URKOPPLAD. BETRAKTA EJ STRÅLEN. STRÅLEN ÄR FARLIG.

VARO! - AVATTAESSA JA SUOJALUKITUS OHITETTAESSA OLET ALTTIINA NÄKYMÄTTÖMÄLLE LASER-SÄTEILYLLE ÄLÄ KATSO SÄTEESEEN.

注 意 - 严禁揭开此盖, 以免激光泄露灼伤

주 의 - 이 덮개를 열면 레이저광에 노출될 수 있으므로 주의하십시오.

Ozone Safety

During normal operation, this machine produces ozone. The ozone produced does not present a hazard to the operator. However, it is advisable that the machine be operated in a well ventilated area.

If you need additional information about ozone, please contact your nearest Samsung dealer.

Power Saver

This printer contains advanced energy conservation technology that reduces power consumption when it is not in active use.

When the printer does not receive data for an extended period of time, power consumption is automatically lowered.

The energy star emblem does not represent EPA endorsement of any product or service.

Recycling

Please recycle or dispose of packaging materials for this product in an environmentally responsible manner.

Radio Frequency Emissions

FCC regulations

This device has been tested and found to comply with the limits for a Class B digital device, pursuant to Part 15 of the FCC rules. These limits are designed to provide reasonable protection against harmful interference in a residential installation. This equipment generates, uses and can radiate radio frequency energy and, if not installed and used in accordance with the instructions, may cause harmful interference to radio communications. However, there is no guarantee that interference will not occur in a particular installation. If this equipment does cause harmful interference to radio or television reception, which can be determined by turning the equipment off and on, the user is encouraged to try to correct the interference by one or more of the following measures:

1. Reorient or relocate the receiving antenna.
2. Increase the separation between the equipment and receiver.
3. Connect the equipment into an outlet on a circuit different from that to which the receiver is connected.
4. Consult the dealer or an experienced radio/TV technician for help.

CAUTION: Changes or modifications not expressly approved by the manufacturer responsible for compliance could void the user's authority to operate the equipment.

Canadian Radio Interference Regulations

This digital apparatus does not exceed the Class B limits for radio noise emissions from digital apparatus as set out in the interference-causing equipment standard entitled "Digital Apparatus", ICES-003 of the Industry and Science Canada.

Cet appareil numérique respecte les limites de bruits radioélectriques applicables aux appareils numériques de Classe B prescrites dans la norme sur le matériel brouilleur: "Appareils Numériques", ICES-003 édictée par l'Industrie et Sciences Canada.

United States of America

Federal Communications Commission (FCC)

Intentional emitter per FCC Part 15

Low power, Radio LAN type devices (radio frequency (RF) wireless communication devices), operating in the 2.4 GHz Band, may be present (embedded) in your printer system. This section is only applicable if these devices are present. Refer to the system label to verify the presence of wireless devices.

Wireless devices that may be in your system are only qualified for use in the United States of America if an FCC ID number is on the system label.

The FCC has set a general guideline of 20 cm (8 inches) separation between the device and the body, for use of a wireless device near the body (this does not include extremities). This device should be used more than 20 cm (8 inches) from the body when wireless devices are on. The power output of the wireless device (or devices), which may be embedded in your printer, is well below the RF exposure limits as set by the FCC.

This transmitter must not be collocated or operation in conjunction with any other antenna or transmitter.

Operation of this device is subject to the following two conditions:(1) This device may not cause harmful interference, and(2) this device must accept any interference received, including interference that may cause undesired operation of the device.

Wireless devices are not user serviceable. Do not modify them in any way. Modification to a wireless device will void the authorization to use it. Contact manufacturer for service.

FCC Statement for Wireless LAN use:
"While installing and operating this transmitter and antenna combination the radio frequency exposure limit of 1mW/cm2 may be exceeded at distances close to the antenna installed. Therefore, the user must maintain a minimum distance of 20cm from the antenna at all times. This device can not be colocated with another transmitter and transmitting antenna."

Declaration of Conformity (European Countries)

Approvals and Certifications

The CE marking applied to this product symbolises Samsung Electronics Co., Ltd. Declaration of Conformity with the following applicable 93/68/EEC Directives of the European Union as of the dates indicated:

January 1, 1995: Council Directive 73/23/EEC Approximation of the laws of the member states related to low voltage equipment.

January 1, 1996: Council Directive 89/336/EEC (92/31/EEC), approximation of the laws of the Member States related to electromagnetic compatibility.

March 9, 1999: Council Directive 1999/5/EC on radio equipment and telecommunications terminal equipment and the mutual recognition of their conformity.

A full declaration, defining the relevant Directives and referenced standards can be obtained from your Samsung Electronics Co., Ltd. representative.

EC Certification

Certification to 1999/5/EC Radio Equipment & Telecommunications Terminal Equipment Directive (FAX)

This Samsung product has been self-certified by Samsung for pan-European single terminal connection to the analogue public switched telephone network (PSTN) in accordance with Directive 1999/5/EC. The product has been designed to work with the national PSTNs and compatible PBXs of the European countries:

In the event of problems, you should contact the Euro QA Lab of Samsung Electronics Co., Ltd. in the first instance.

The product has been tested against TBR21 and/or TBR 38. To assist in the use and application of terminal equipment which complies with this standard, the European Telecommunication Standards Institute (ETSI) has issued an advisory document (EG 201 121) which contains notes and additional requirements to ensure network compatibility of TBR21 terminals. The product has been designed against, and is fully compliant with, all of the relevant advisory notes contained in this document.

European Radio Approval Information (for products fitted with EU-approved radio devices)

This Product is a printer; low power, Radio LAN type devices (radio frequency (RF) wireless communication devices), operating in the 2.4 GHz band, may be present (embedded) in your printer system which is intended for home or office use. This section is only applicable if these devices are present. Refer to the system label to verify the presence of wireless devices.

Wireless devices that may be in your system are only qualified for use in the European Union or associated areas if a CE mark with CE a Notified Body Registration Number and the Alert Symbol is on the system label.

The power output of the wireless device or devices that may be embedded in you printer is well below the RF exposure limits as set by the European Commission through the R&TTE directive.

European States qualified under wireless approvals:

EU	Austria, Belgium, Denmark, Finland, France (with frequency restrictions), Germany, Greece, Ireland, Italy, Luxembourg, The Netherlands, Portugal, Spain, Sweden and the United
Accept EU	Iceland, Liechtenstein, Norway and Switzerland

European States with restrictions on use:

EU	In France, the frequency range is restricted to 2446.5-2483.5 MHz for devices above 10 mW transmitting power such as wireless
Accept EU	No limitations at this time.

Regulatory Compliance Statements

Wireless Guidance

Low power, Radio LAN type devices (radio frequency (RF) wireless communication devices), operating in the 2.4 GHz Band, may be present (embedded) in your printer system. The following section is a general overview of considerations while operating a wireless device.

Additional limitations, cautions, and concerns for specific countries are listed in the specific country sections (or country group sections). The wireless devices in your system are only qualified for use in the countries identified by the Radio Approval Marks on the system rating label. If the country you will be using the wireless device in, is not listed, please contact your local Radio Approval agency for requirements. Wireless devices are closely regulated and use may not be allowed.

The power output of the wireless device or devices that may be embedded in your printer is well below the RF exposure limits as known at this time. Because the wireless devices (which may be embedded into your printer) emit less energy than is allowed in radio frequency safety standards and recommendations, manufacturer believes these devices are safe for use. Regardless of the power levels, care should be taken to minimize human contact during normal operation.

As a general guideline, a separation of 20 cm (8 inches) between the wireless device and the body, for use of a wireless device near the body (this does not include

extremities) is typical. This device should be used more than 20 cm (8 inches) from the body when wireless devices are on and transmitting.

This transmitter must not be collocated or operation in conjunction with any other antenna or transmitter.

Some circumstances require restrictions on wireless devices. Examples of common restrictions are listed below:

Radio frequency wireless communication can interfere with equipment on commercial aircraft. Current aviation regulations require wireless devices to be turned off while traveling in an airplane. 802.11B (also known as wireless Ethernet) and Bluetooth communication devices are examples of devices that provide wireless communication.

In environments where the risk of interference to other devices or services is harmful or perceived as harmful, the option to use a wireless device may be restricted or eliminated. Airports, Hospitals, and Oxygen or flammable gas laden atmospheres are limited examples where use of wireless devices may be restricted or eliminated. When in environments where you are uncertain of the sanction to use wireless devices, ask the applicable authority for authorization prior to use or turning on the wireless device.

Every country has different restrictions on the use of wireless devices. Since your system is equipped with a wireless device, when traveling between countries with your system, check with the local Radio Approval authorities prior to any move or trip for any restrictions on the use of a wireless device in the destination country.

If your system came equipped with an internal embedded wireless device, do not operate the wireless device unless all covers and shields are in place and the system is fully assembled.

Wireless devices are not user serviceable. Do not modify them in any way. Modification to a wireless device will void the authorization to use it. Please contact manufacturer for service.

Only use drivers approved for the country in which the device will be used. See the manufacturer System Restoration Kit, or contact manufacturer Technical Support for additional information.

EU Declaration of Conformity (LVD,EMC)

For the following product :

Color Laser Beam Printer

(Product name)

CLP-500, CLP-500N

(Model Number)

Manufactured at :

Samsung Electronics Co.,Ltd. #259, Gongdan-Dong, Gumi-City, Gyungbuk, KOREA. 730-030

(factory name, address)

We hereby declare, that all major safety requirements, concerning to CE Marking Directive[93/68/EEC] and Low Voltage Directive [73/23/EEC], ElectroMagnetic Compatibility [89/336/EEC], amendments [92/31/EEC] are fulfilled, as laid out in the guideline set down by the member states of the EEC Commission.

This declaration is valid for all samples that are part of this declaration, which are manufactured according to the production charts appendix.

The standards relevant for the evaluation of safety & EMC requirements are as follows :

1. ***Certificate of conformity / Test report issued by :***
2. ***Technical documentation kept at :***
   which will be made available upon request.

LVD : EN 60950:1992+A1+A2+A3+A4+A11, EN 60825-1:1994+A1

EMC : EN55022:1998incA1:2000, EN61000-3-2:2000,EN61000:3-3:1995incA1:2001
EN55024:1998incA1:2001, AS/NZS3548:1995,EN61000:4-2:1995, EN61000:4-1996,
EN61000:4-4:1995, EN61000:4-5:1995 EN61000:4-6:1996, EN61000:4-11:1994

LVD : TUV Rheinland

EMC : SAMSUNG Electronics EURO Q.A. Lab. in the U.K.

Samsung Electronics Co.,Ltd.

(Manufacturer)

Samsung Electronics Co.,Ltd.
#259,Gongdan-Dong,Gumi-City
Gyungbuk, Korea 730-030

2003-10-8

Whan-Soon Yim / Senior Manager

(place and date of issue) (name and signature of authorized person)

(Representative in the EU)

Samsung Electronics Euro QA Lab.
Blackbushe Business Park, Saxony Way
Yateley, Hampshire, GU46 6GG, UK

2003-10-8

In-Seop Lee / Manager

(place and date of issue) (name and signature of authorized person)

MEMO

1 INTRODUCTION

Congratulations on the purchase of your printer!

This chapter includes:

- **Special Features**
- **Printer Components**

Special Features

Your new printer is equipped with special features that improve the print quality. You can:

Print in color with excellent quality and speed

- You can print in a full range of colors using cyan, magenta, yellow, and black.
- You can print at **1200 dpi** (Class). See page 4.9.
- In black & white mode your printer prints A4-sized paper at 20 ppm and letter-sized paper at 21 ppm (pages per minute). For color printing, A4/letter-sized paper prints at 5 ppm.
- In duplex printing, your printer prints A4/Letter sized paper at 9.6 IPM (images per minute) for black & white and 5 IPM for color.

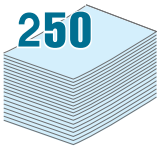

Handle paper flexibly

- **Multi-purpose Tray** supports letterhead, envelopes, labels, transparencies, custom-sized materials, postcards, and heavy paper. A 100-sheet **Multi-purpose Tray** supports plain paper.
- The **Standard 250-sheet input tray** (Tray1) and **optional 500-sheet input tray** (Tray2) supports A4/letter-sized paper.

Create professional documents

- Print **Watermarks**. You can customize your documents with a word, such as "Confidential." See page 5.10.
- Print **Booklets**. This feature enables you to easily print the pages to create books. Once printed, all you have to do is to fold and staple the pages. See page 5.9.
- Print **Posters**. The text and pictures of each page of your document are magnified and printed across sheet of paper and taped together to form a poster. See page 5.7.

Save time and money

- You can print on both sides of the paper to save paper (**double-sided printing**). See page 5.2.
- You can print multiple pages on one single sheet of paper to save paper.
- You can use preprinted forms and letterhead on plain paper. See “Using Overlays” on page 5.13.
- This printer automatically **conserves electricity** by substantially reducing power consumption when not printing.
- This printer meets **Energy Star** guidelines for energy efficiency.

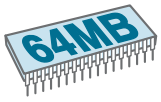

Expand the printer capacity

- This printer has 64 MB of memory which can be expanded to **192 MB**.
- You can install an optional 500-sheet tray in your printer. This tray reduces how often you have to add paper to the printer.
- A **Network interface** enables network printing. You can add the optional network interface card to CLP-550.

  CLP-550N comes with a built-in network interface, 10/100 Base TX. You can also use an optional wireless network interface.

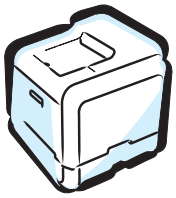

Print in various environments

- You can print in **Windows 95/98/Me/NT 4.0/2000/XP**.
- Your printer is compatible with a **Macintosh** and **Linux**.
- Your printer comes with both the **USB** and **Parallel** interface. The Parallel interface is available depending on your country.

  You can also use a **Network interface**. CLP-550N comes with a built-in network interface, 10/100 Base TX. You can also use an optional wireless network interface, but, you need to add the optional network interface card to CLP-550.

Printer Components

Front View

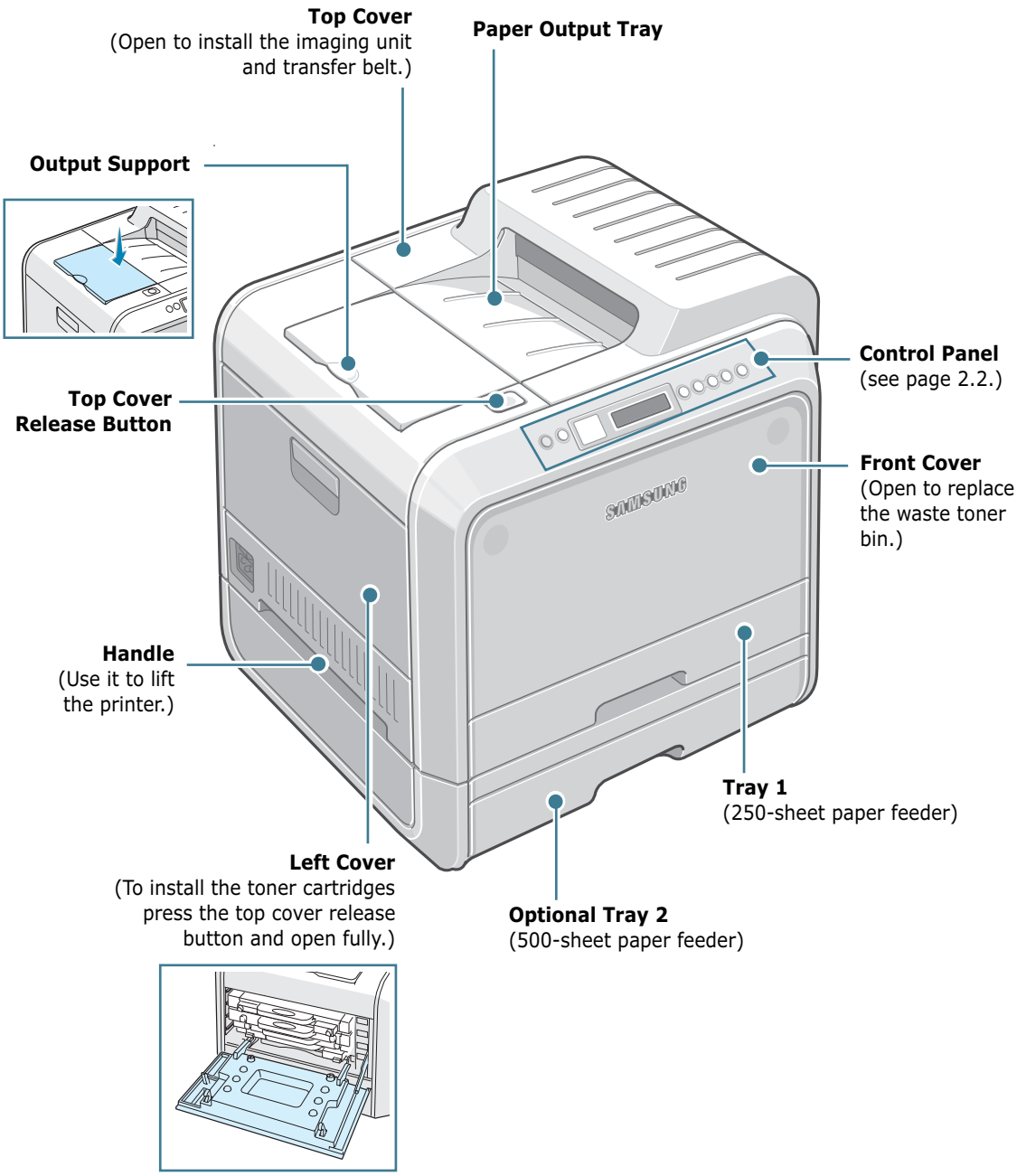

NOTE: If you continuously print many pages, the surface of the output tray may become hot. Ensure that you, and especially children, do not touch the surface.

Right View

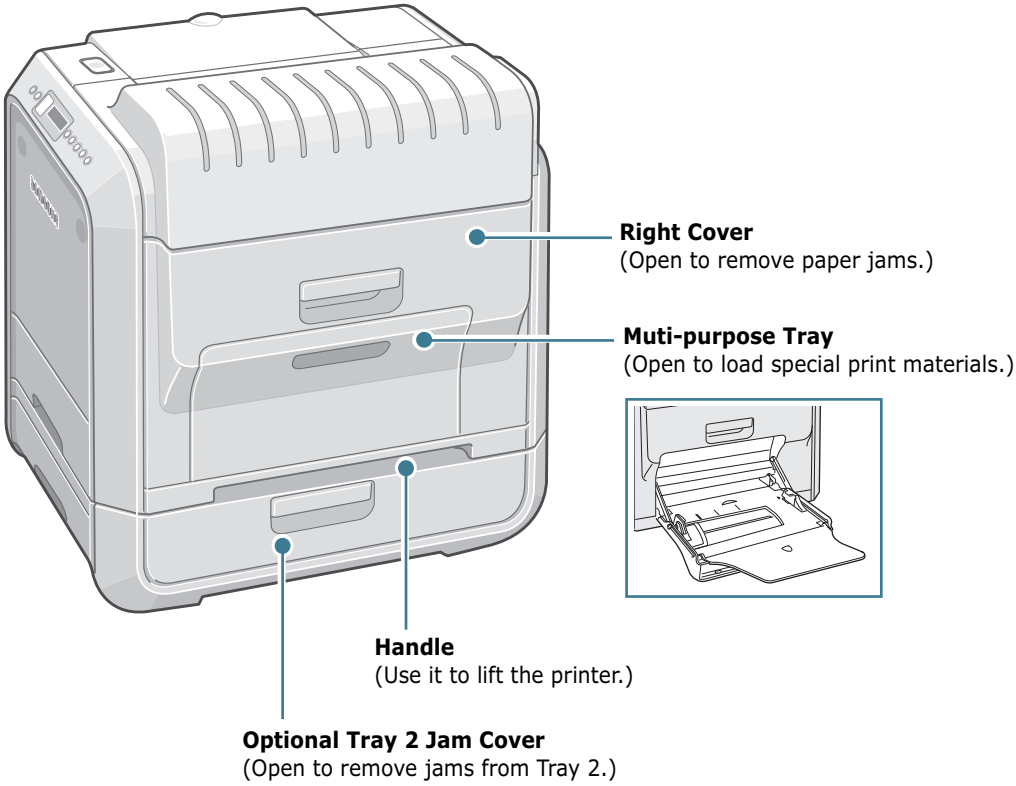
Right Cover
(Open to remove paper jams.)
Muti-purpose Tray
(Open to load special print materials.)
Handle
(Use it to lift the printer.)
Optional Tray 2 Jam Cover
(Open to remove jams from Tray 2.)

Rear View

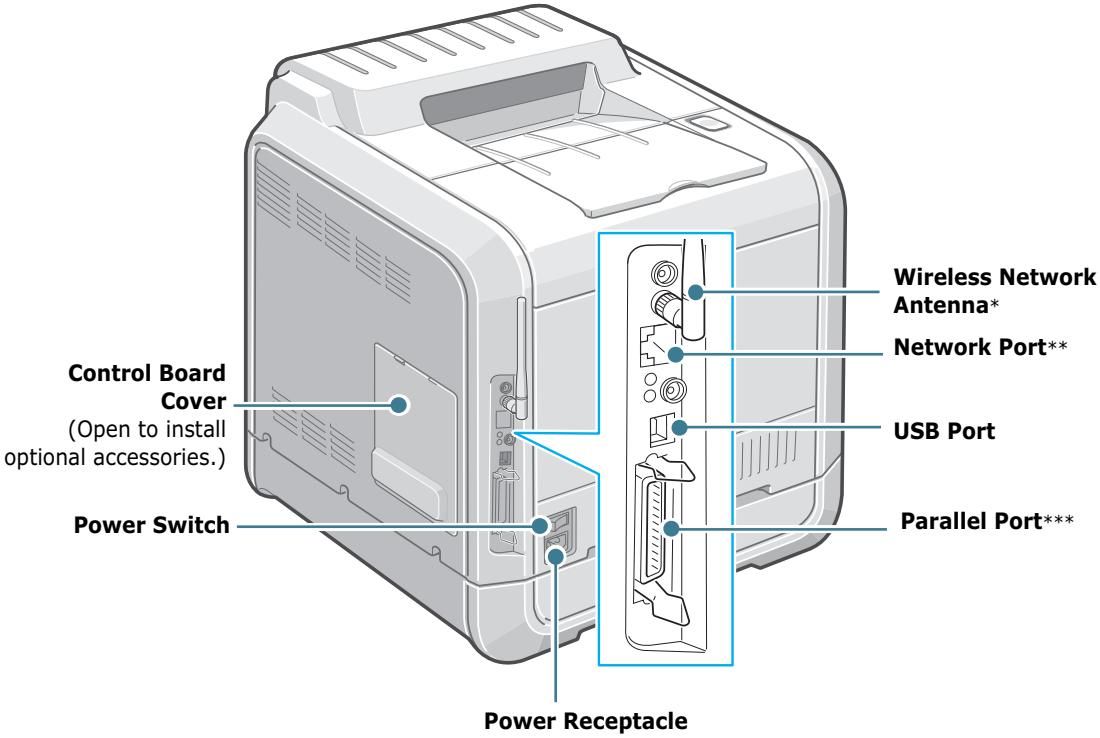

** This wireless network port is not supplied with the printer. It is an option that must be purchased and installed separately.*

*** The network port is fitted as standard on the CLP-550N. CLP-550 users can purchase and install separately an optional Network Card. For details, see page D.7.*

**** The parallel port may not be available depending on your country.*

2 USING THE CONTROL PANEL

This chapter describes how to use the printer's control panel.

This chapter includes:

- **Understanding the Control Panel**
- **Using Control Panel Menus**

Understanding the Control Panel

The control panel on the top right side of your printer has a display and seven buttons.

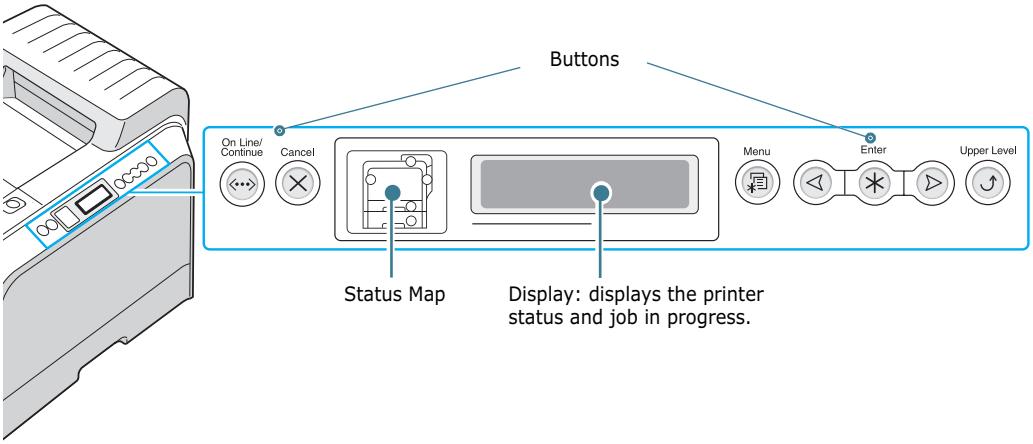

Display

Message	Description
Ready	• The printer is on-line and ready to print. • If you press **On Line/Continue**, the printer switches to off-line.
Offline	• The printer is off-line and cannot print. • If you press **On Line/Continue**, the printer switches to on-line.
Processing...	• The printer is printing. • If you want to cancel printing, press **Cancel**.
Sleeping...	• The printer is in Power Save mode, using less power. When a print job is received from the computer or if any button is pressed, the printer switches to on-line. • To deactivate the Power Save mode or change the power-saving time, see page 2.9.

See "Understanding Display Messages" on page 7.26 for a complete listing of all the printer messages.

Buttons

Button	Description		
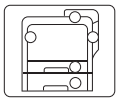 (status map)	When an error occurs, a lamp turns on at the corresponding location on the Status map. An error message appears on the display so that you can locate the error. For details on the meaning of the error messages, see page 7.26.		
On Line/ Continue	• Press to switch between on-line and off-line. • In menu mode, press to return to ready mode. The color of the **On Line/Continue** button indicates the status of the printer.		
	Green	On	The printer is on-line and can receive data from the computer.
		Blinking	• When the backlight blinks slowly, the printer is receiving data from the computer. • When the backlight blinks quickly, the printer is receiving and printing data.
	Orange	On	The printer stops printing due to a major error. Check the display message. See page 7.26 for details on the meaning of the error message.
		Blinking	A minor error has occurred and the printer is waiting for the error to be cleared. Check the display message. When the problem is cleared, the printer resumes printing. If you want to ignore this warning, press this button.
	Off	• The printer is off-line and cannot print. • The printer is in Power Save mode. When data is received, it switches to on-line.	
Menu	• Press to enter menu mode. • In menu mode, press to scroll through the menus.		

2

Button	Description
Enter	In menu mode, press to select the displayed submenu item or confirm the changed setting. The selected item is marked with an *.
	In menu mode, press to scroll through submenu items or setting options. Pressing ► moves you to the next option and pressing ◄ sends you back to the previous option.
Cancel	• Press to cancel the current print job. • In menu mode, press to return to ready mode.
Upper Level	In menu mode, press to go back to the upper menu level.

Using Control Panel Menus

A number of menus are available to make it easy for you to change the printer settings. The diagram on page 2.6 shows the menus and all of the items available in each menu. The items in each menu and the options you can select are described in more detail in the tables beginning on page 2.6.

Accessing Control Panel Menus

You can configure your printer from the printer's control panel. You can also use the control panel menus while the printer is in use.

1. In ready mode press the **Menu** button ( ) until you see the menu you want on the bottom line of the display.
2. Press the **Enter** button ( ) to access the menu.
3. Press the scroll button (or) until the menu item you want displays on the bottom line.
4. Press the **Enter** button ( ) to confirm the selected item.
5. If the menu item has submenus, repeat steps 3 and 4.
6. Press the scroll button (or) until the setting option you want displays on the bottom line or enter the required value.
7. Press the **Enter** button ( ) to save your input or selection.

   An asterisk (*) appears next to the selection on the display, indicating that it is now the default.
8. To exit the menu, press the **Upper Level** button ( ) repeatedly, or the **Cancel** button( ).

   After 60 seconds of inactivity (no key has been pressed), the printer automatically returns to ready mode.

NOTE: Print settings made from the printer driver override the settings on the control panel.

Overview of Control Panel Menus

The control panel menus are used to configure the printer. The control panel provides access to the following menus:

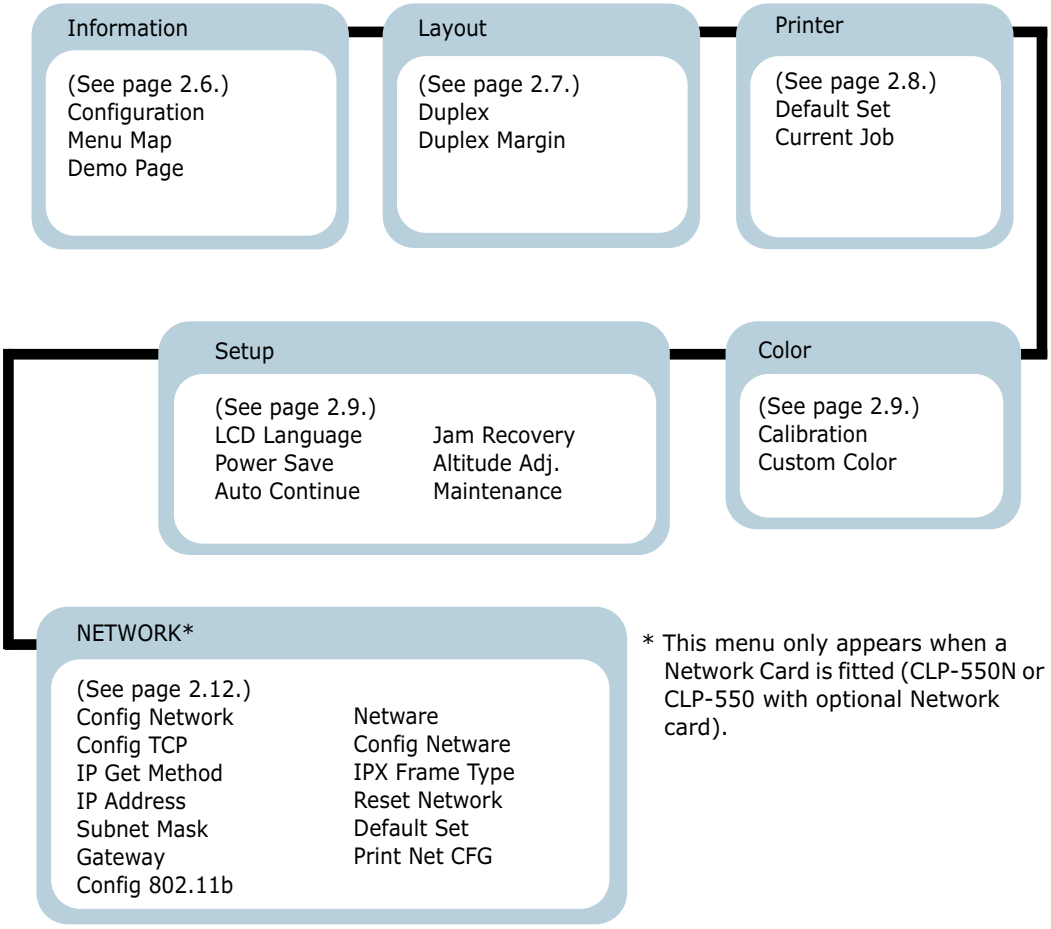

* This menu only appears when a Network Card is fitted (CLP-550N or CLP-550 with optional Network card).

Information Menu

This menu contains information pages that you can print to give details about the printer and its configuration.

Item	Explanation
Configuration	The configuration page shows the printer's current configuration. See page 6.2.
Menu Map	The menu map shows the layout and current settings of the control panel menu items.

Item	Explanation
Demo Page	The demo page allows you to check to see if your printer is printing properly.

Layout Menu

Use the **Layout** menu to define all settings relating to output.

(*: the default setting)

Item	Explanation
Duplex	Options: Off*, Long Edge, Short Edge To print on both sides of paper, choose the edge as follows. • **Long Edge**: Flips on the long edge. Prints pages to read like a book. • **Short Edge**: Flips on the short edge. Prints pages to read by flipping over like a note pad. 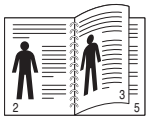 Long Edge in the Portrait orientation 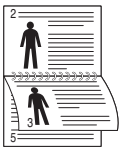 Long Edge in the Landscape orientation Short Edge in the Portrait orientation 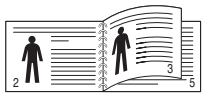 Short Edge in the Landscape orientation Select **Off** to print on one side of the paper.

2

Item	Explanation
Duplex Margin	In this menu, you can set the margins for double-sided printing. You can increase or decrease the value in 0.1mm increments. • **Top Margin**: Set the top margin, from 0.0mm to 9.9mm. • **Left Margin**: Set the left margin, from 0.0mm to 9.9mm. • **Short Binding**: Set the bottom margin of the back of the page for short binding, from 0.0mm to 10mm. Binding position: In the portrait orientation, appears in the upper line of the page. In the landscape orientation, appears on the right side of the page. • **Long Binding**: Set the right margin of the back of the page for long binding, from 0.0mm to 22mm. Binding position: In the portrait orientation, appears on the left side of the page. In the landscape orientation, appears in the upper line of the page.

Printer Menu

This menu allows you to reset the printer settings or cancel the current job.

Item	Explanation
Default Set	This menu item allows you to restore the printer's factory default settings.
Current Job	You can cancel the current print job and remove it from the printer buffer.

Color Menu

This menu allows you to adjust the color setting.

Item	Explanation
Calibration	Options: Off, Auto*, Run Now This menu item allows you to calibrate the printer for the best possible color printer quality. • **Off**: The printer is calibrated by the default setting. • **Auto**: It automatically calibrates the printer to produce the best possible print quality for color documents. • **Run Now**: It manually calibrates the printer.
Custom Color	This item allows you to adjust a specific color contrast individually. • **CMYK:** It allows you to adjust the contrast of the toner in each toner cartridge. **Default**: It optimizes the colors automatically. **Manual Adjust**: It allows you to manually adjust the selected color contrast for each cartridge. **Note**: You should use the **Default** setting for a best color quality.

Setup Menu

Use the **Setup** menu to configure a variety of printer features.

(*: the default setting)

Item	Explanation
LCD Language	Options: English*, German, French, Italian, Spanish, Russian The LCD Language setting determines the language of the text that appears on the control panel display and information printing.

Item	Explanation
Power Save	Options: 5 Minutes, 10 Minutes, 15 Minutes, 30 Minutes*, 45 Minutes, 60 Minutes, 120 Minutes When the printer does not receive data for an extended period of time, power consumption is automatically lowered. Set how long the printer waits before going to power save.
Auto Continue	Options: Off, On* This item determines whether or not the printer continues printing when it detects paper mismatched to your paper setting. • **Off**: If a paper mismatch occurs, the message remains on the display and the printer remains off-line until you insert the correct paper. • **On**: If the paper is mismatched, an error message displays. The printer goes off-line for 30 seconds then automatically clears the message and continues printing.
Jam Recovery	Options: Off*, On This item determines how the printer behaves when a paper jam occurs. • **Off**: The printer does not reprint pages. Printing performance might be increased with this setting. • **On**: The printer automatically reprints pages after you clear the paper jam.
Altitude Adj.	Options: Low*, High You can optimize the print quality according to your altitude.

Item	Explanation
Maintenance	This item allows you to maintain the toner cartridge and other consumables. • **Check Toner**: allows you to check how much toner is left in the each cartridge. See page 6.4. • **Check Others** **Imaging Unit**: allows you to check the total number of images printed. **Transfer Belt**: allows you to check the total number of images printed. **Fuser**, **Transfer Roll.**, **Pickup MP**, **Pickup Tray1**, **Pickup Tray2**: These items are only for the service technians. • **Alarm Shortage**: This item determines how the printer behaves when the consumables are low. **Off**: The printer does not display the warning message. **On**: The printer displays the warning message.

Network Menu

This menu lets you configure the network interface card installed in your printer according to how the network is set up. You can upgrade the firmware of the network interface card, and print the configuration.

NOTE: This menu only appears when a Network Card is fitted (CLP-550N or CLP-550 with optional Network card).

(*: the default setting)

Item	Explanation
Config Network	Options: Yes, No* Sets whether or not you want to configure the network. If you select **Yes**, you can configure the TCP/IP and Netware menus. If you select **Yes**, the following options are available: **Config TCP**, **Netware** and **Config Netware**.
Config TCP	Options: Yes, No* Select whether you want to set the IP address or not. If you select **Yes**, you can configure IP address item. If you select **Yes**, the following options are available: **IP Get Method**, **IP Address**, **Subnet Mask** and **Gateway**.
IP Get Method	Options: Static*, BOOTP, DHCP You can set this item only when you set the **Config TCP** to **Yes**. • **Static**: You can enter IP address, subnetmask, and gateway manually. • **BOOTP**: The BOOTP server allots the IP address to you automatically. • **DHCP**: The DHCP server allots the IP address to you automatically.

Item	Explanation
IP Address	You can select this item only when you set **IP Get Method** to **Static**. This item lets you enter the IP address manually. Press the scroll button to set the value of the 1st byte between 1 and 255, and then press the **Enter** button. Set the value for the 2nd to the 4th byte the same way.
Subnet Mask	You can set this item only when you set **IP Get Method** to **Static**. This item lets you enter the subnet mask manually. Press the scroll button to set the value of the 1st byte between 1 and 255, and then press the **Enter** button. Set the value for the 2nd to the 4th byte the same way.
Gateway	You can set this item only when you set **IP Get Method** to **Static**. This item lets you enter the gateway manually. Press the scroll button to set the value of the 1st byte between 1 and 255, and then press the **Enter** button. Set the value for the 2nd to the 4th byte the same way.
Config 802.11b	Values: Yes, No* Configure the Wireless Network environments. If you select **Yes**, the following options are available : **SSID**, **Operation Mode**, **Channel**, **Authentication**, **Encryption**, **Using Key**, **KeyType** and **Key**. See "Configuring the Wireless Network" on page C.12 **Note:** This menu only appears when a Wireless Network interface Card is fitted.

2

Item	Explanation
Netware	Options: On*, Off You can select whether or not you want to use the Netware protocol. If you select **On**, you can access the **Config Netware** menu item. In the **Config Netware** menu, you can specify the frame type parameter used on your network.
Config Netware	Options: Yes, No* You can set this item only when you set **Netware** to **On**. This item lets you select whether or not you set the frame type parameter. Select **Yes** to select the frame type. If you select **Yes**, the **IPX Frame Type** option appears on the display.
IPX Frame Type	Values: Auto*, EN_8022, EN_8023, EN_II, EN_SNAP You can select this item only when you set **Config Netware** to **Yes**. This item lets you select IPX Frame Type. • **Auto**:You can set the frame type automatically. • **EN_8022**: Select this value to use the IEEE 802.2 frame type. • **EN_8023**:Select this value to use the IEEE 802.3 frame type. • **EN_II** :Select this value to use the ETHERNET II frame type. • **EN_SNAP**:Select this value to use the SNAP frame type.
Reset Network	This item reboots the network interface card.
Default Set	This item performs a simple reset and restores the factory default for the network configuration.
Print Net CFG	This item prints a page showing the network parameters you set.

3 USING PRINT MATERIALS

This chapter will help you understand the types of paper you can use with your printer and how to properly load paper in the different paper trays for the best print quality.

This chapter includes:

- **Choosing Paper and Other Materials**
- **Loading Paper**
- **Printing on Special Print Materials**

Choosing Paper and Other Materials

You can print on a variety of print materials, such as plain paper, envelopes, labels, transparencies and so on. See "Printing on Special Print Materials" on page 3.14. To get the best possible print quality, use only high-quality copier-grade paper.

When you choose print materials, consider the following:

- **Desired outcome**: The paper you choose should be appropriate for the project.
- **Size**: You can use any size paper that fits easily within the paper adjusters of the paper tray.
- **Weight** : Your printer supports paper weighs as follows:

  -16~24lbs (60~90g/m^2) bond for Tray 1 or optional Tray 2

  -16~43lbs (60~163g/m^2) bond for the Multi-purpose Tray

  -20~24lbs (75~90g/m^2) bond for duplex printing
- **Brightness**: Some papers are whiter than others and produce sharper, more vibrant images.
- **Surface smoothness**: The smoothness of the paper affects how crisp the printing looks on the paper.

CAUTION: Using a material that does not conform to the specifications listed on page E.6 can cause problems that may require service. This service is not covered by the warranty or service agreements.

Sizes and Capacities

Size	Input Source/Capacity*			
	Tray 1	Tray 2 (option)	Multi-purpose Tray	Manual Feed
Plain Paper	250	500	100	1
Envelopes	—	—	10	1
Labels**	—	—	10	1
Transparencies**	—	—	30	1
Card stock**	—	—	10	1

*Depending on paper thickness, the maximum capacity may be reduced.
** If you are experiencing excessive jamming, feed one sheet at a time through the Multi-purpose Tray.

Guidelines for Paper and Special Materials

When selecting or loading paper, envelopes, or other special materials, keep these guidelines in mind:

- Attempting to print on damp, curled, wrinkled, or torn paper can cause paper jams and poor print quality.
- Use cut-sheet paper only. You cannot use multi-part paper.
- Use only high-quality, copier grade paper for the best print quality.
- Do not use paper with irregularities, such as tabs or staples.
- Do not attempt to load any tray while printing and never overfill the tray. This could cause a paper jam.
- Avoid paper with embossed lettering, perforations, or a texture that is too smooth or too rough.
- Colored paper should be of the same high quality as white photocopy paper. The pigments must withstand the printer's fusing temperature of 180°C (356°F) for 0.1 seconds without deteriorating. Do not use paper with a colored coating that was added after the paper was produced.
- Preprinted forms must be printed with nonflammable, heat-resistant ink that does not melt, vaporize, or release hazardous emissions when subject to the printer's fusing temperature.
- Store paper in its ream wrapper until you are ready to use it. Place cartons on pallets or shelves, not on the floor.
- Do not place heavy objects on top of the paper, whether it is packaged or unpackaged.
- Keep paper away from moisture, direct sunlight or other conditions that can cause it to wrinkle or curl.

NOTE: Do not use carbonless paper and tracing paper. They are unstable at the fusing temperature and can give of fumes, or cause damage to the printer.

Loading Paper

Proper paper loading helps prevent paper jams and ensure trouble-free printing. Do not remove the paper tray while a job is printing. Doing so may cause a paper jam. See "Sizes and Capacities" on page 3.2 for acceptable paper capacities for each tray.

Using Tray 1

The tray, Tray 1, can hold a maximum of 250 sheets of plain A4 and letter-sized paper.

You can purchase an optional tray, Tray 2, and attach it below Tray 1, to load an additional 500 sheets of paper.

1 Pull the tray out of the printer.

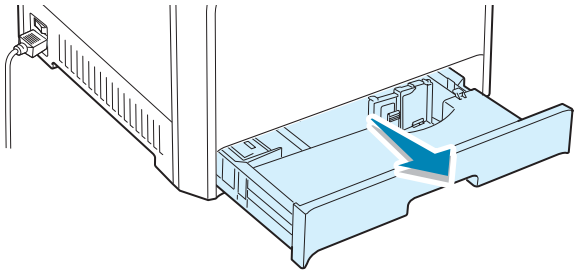

2 Push down on the metal plate until it locks into position.

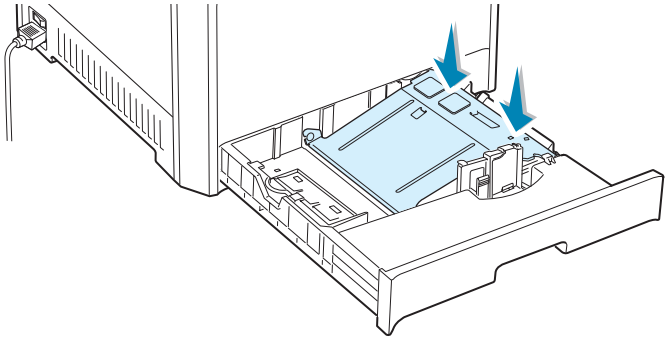

3 Flex the paper sheets back and forth to separate the pages, and then fan them while holding one edge. Tap the edge of the stack on a flat surface to even it up.

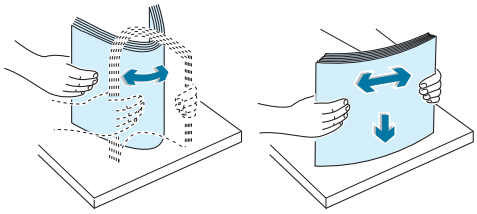

4 Load paper **with the print side facing up**.

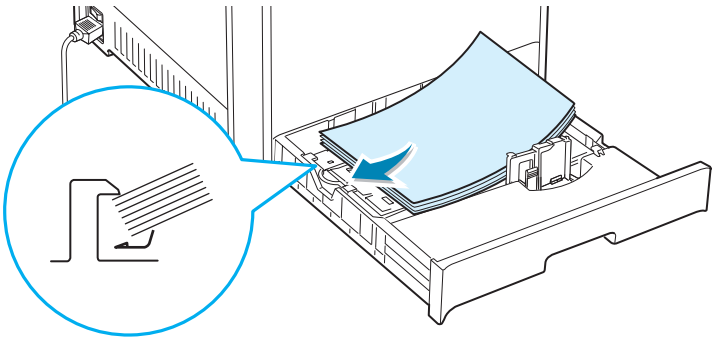

Make sure that all four corners are flat in the tray and under the corner brackets as shown below.

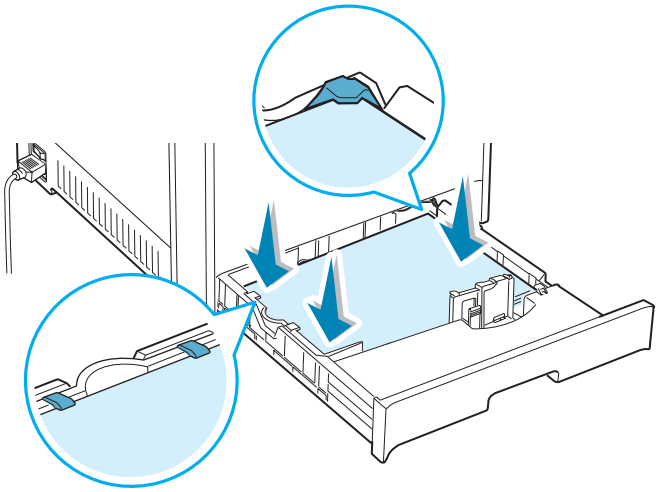

5 Do not exceed the maximum stack height. Overfilling the tray may cause a paper jam.

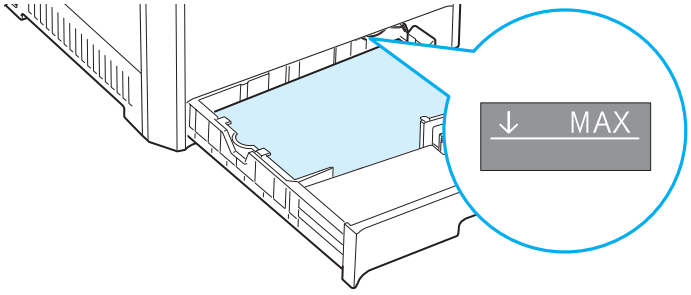

6 While pinching the paper guide as shown, move it toward the paper until it lightly touches the side of the stack. Do not press the guide too tightly against the edge of the paper; the guide may bend the paper.

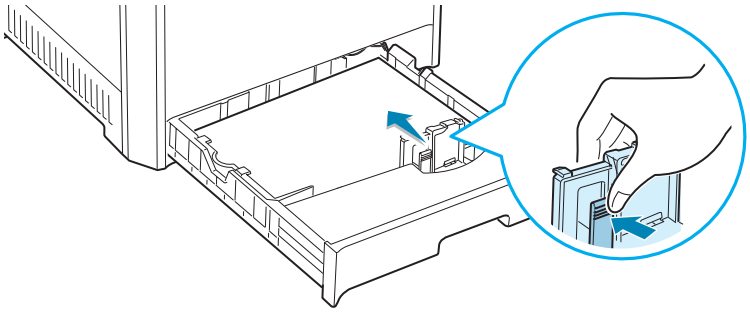

NOTE: If you want to change the paper size in the tray, refer to page 3.7.

7 Slide the tray back into the printer.

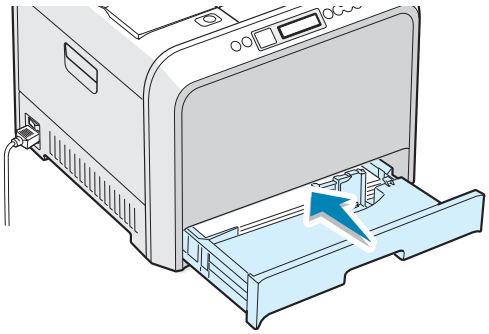

8 When you print a document, select the paper type, size and source in your software application. For details, see page 4.7.

Changing the Paper Size in the Tray

The tray is preset to Letter or A4 size, depending on your country. To change the size to A4 or Letter, you must adjust the paper length guide properly.

1 Lift the paper length guide and place it in the correct position for the paper size you are loading.

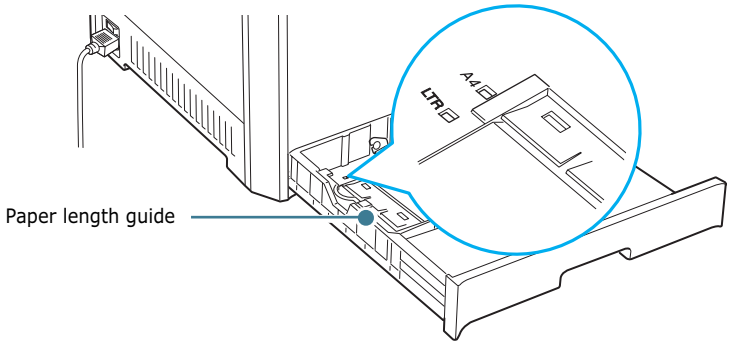

To remove the paper length guide, turn it slightly to your right to release the locks on the bottom of the guide, then pull it up.

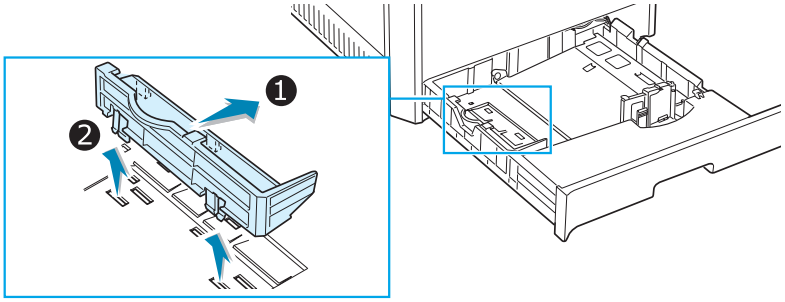

To place the paper length guide in the paper position you want, insert the locks on the bottom of the guide into the desired paper slot and push it all the way in.

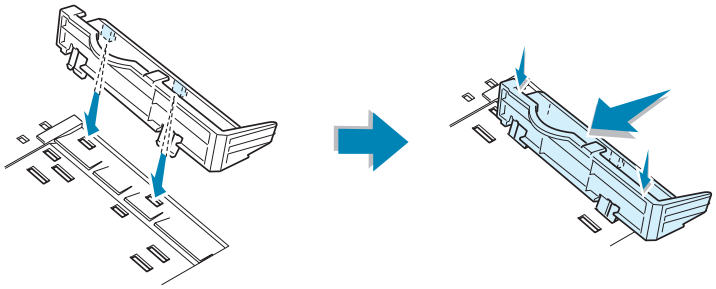

2 Load paper with the **print side facing up**. For more information see steps 4 and 5 on page 3.5~3.6.

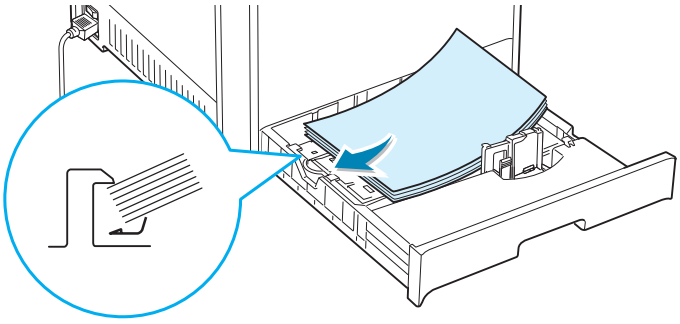

3 While pinching the paper guide as shown, move it toward the paper until it lightly touches the side of the stack. Do not push the guide to tightly against the edge of the paper as it may cause the paper to bend.

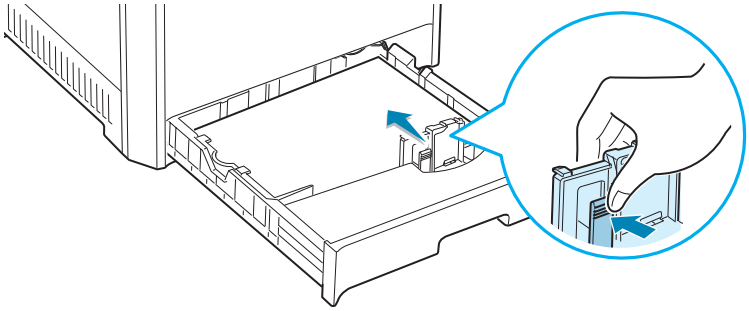

Using the Optional Tray 2

The optional tray, Tray 2, can hold a maximum of 500 sheets of plain paper.

To load paper in Tray 2, follow the instructions for loading paper on page 3.4.

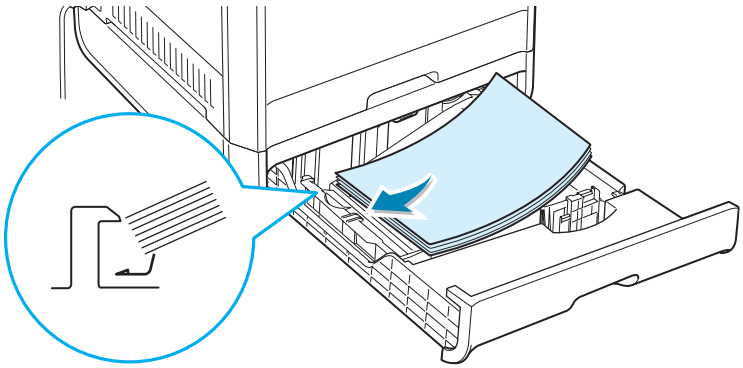

Using the Multi-purpose Tray

The Multi-purpose Tray is located on the right side of your printer. It can be closed when you are not using it, making the printer more compact.

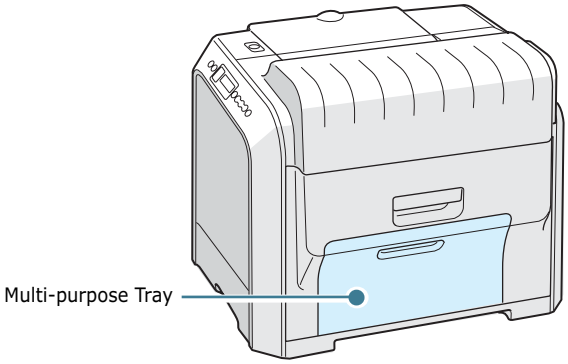

The Multi-purpose Tray can hold several sizes and types of material, such as transparencies, cards and envelopes. You may also want to use the Multi-purpose Tray for single page print jobs on letterhead, colored paper for use as separator sheets, or other special materials that you do not normally keep in the paper tray. You can load approximately 100 sheets of plain paper, 10 envelopes, 30 transparencies, 10 sheets of card stock or 10 labels at a time.

- Load only one size of print material at a time in the Multi-purpose Tray.
- To prevent paper jams, do not add paper when there is still paper in the Multi-purpose Tray. This also applies to other types of print materials.
- Print materials should be loaded face down with the top edge going into the Multi-purpose Tray first and be placed in the center of the tray.

To load print material in the Multi-purpose Tray:

1 Lower the Multi-purpose Tray and unfold the paper support extension as shown.

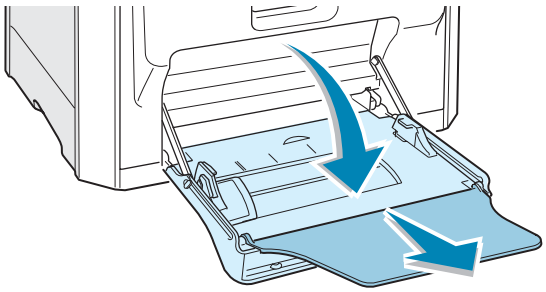

2 If you are using paper, flex or fan the edge of the paper stack to separate the pages before loading.

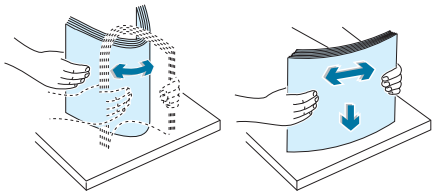

For transparencies, hold them by the edges and avoid touching the print side. Oils from your fingers can cause print quality problems.

3 Load the print material **with the print side facing down** and against the right edge of the tray.

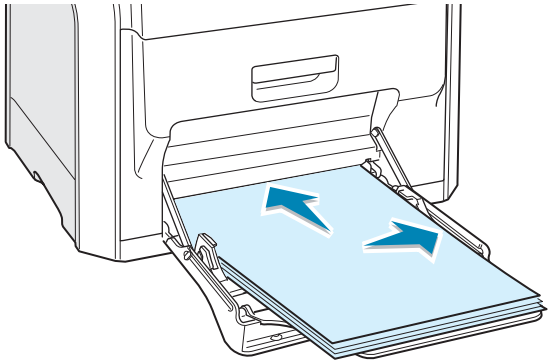

4 Pinch the paper width guide and slide it to the right to touch lightly against the edge of the material without bending it.

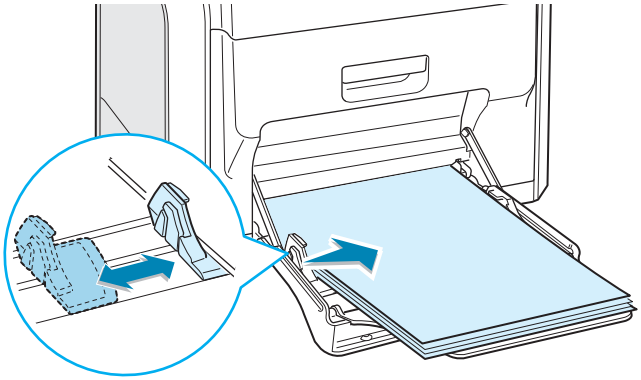

If you want to print on previously printed paper from the Multi-purpose Tray, the printed side should be facing up with the uncurled edge towards the printer. If you experience problems with the paper feeding, turn the paper around.

NOTE: Make sure that you have not loaded too much print material.
The print material buckles if you load a stack that is too deep or if you push it in too far.

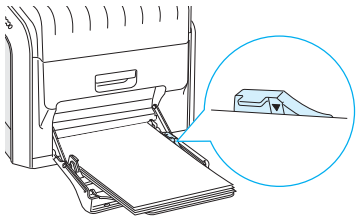

5 When you print a document, set the paper source to **MP Tray** and select the correct paper type in the software application. For details, see page 4.7.

NOTE: After printing fold away the paper support extension and close the Multi-purpose Tray.

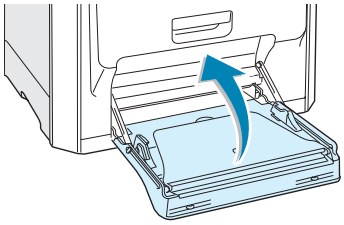

Using the Manual Feed

If you select **Manual** in the **Source** option when changing print settings, you can manually load a sheet of print material in Multi-purpose Tray. Manually loading paper can be helpful when you want to check the print quality after each page is printed.

This loading procedure is almost the same as the procedure for loading in the Multi-purpose Tray, except you load paper sheet-by-sheet in the Tray, send print data to print the first page, and press the **On Line/Continue** button ( ) on the control panel to print each following page.

1 Load a sheet of print material **with the print side down** and against the right edge of the Multi-purpose Tray.

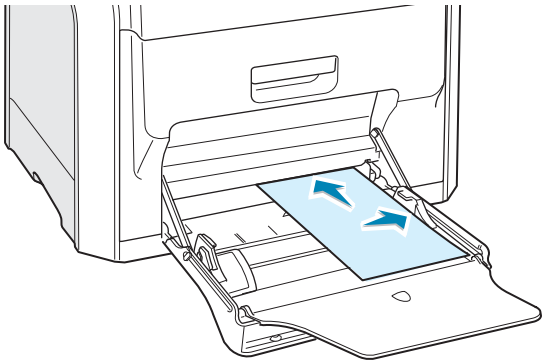

2 Pinch the paper width guide and slide it to the right to touch lightly against the edge of the paper without bending it.

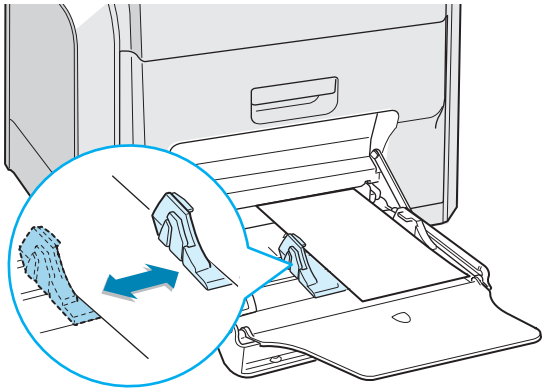

3 When you print a document, you must select **Manual** for **Source** in the software application, and then select the correct paper size and type. For details, see page 4.7.

4 Print the document.

The display shows a message prompting you to load paper.

5 Press the **On Line/Continue** button ( ).

The printer picks up the print material and prints. After one page is printed, the message appears again.

6 Insert the next sheet into the Multi-purpose Tray and press the **On Line/Continue** button ( ).

Repeat this step for every page to be printed.

Printing on Special Print Materials

Printing on Envelopes

- Load envelopes into the Multi-purpose Tray only.
- Only use envelopes recommended for laser printers. Before loading envelopes in the Multi-purpose Tray, make sure that they are undamaged and are not stuck together.
- Do not feed stamped envelopes.
- Never use envelopes with clasps, snaps, windows, coated linings, or self-stick adhesives.

To print on envelopes:

1 Open the Multi-purpose Tray and unfold the paper support.

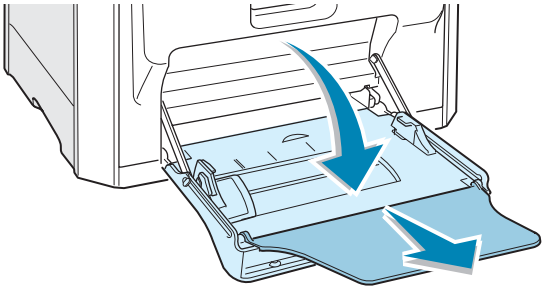

2 Flex or fan the edge of the envelope stack to separate them before loading.

3 Load the envelopes into the Multi-purpose Tray **with the flap side up**. The end of the envelope with the stamp area enters the printer first.

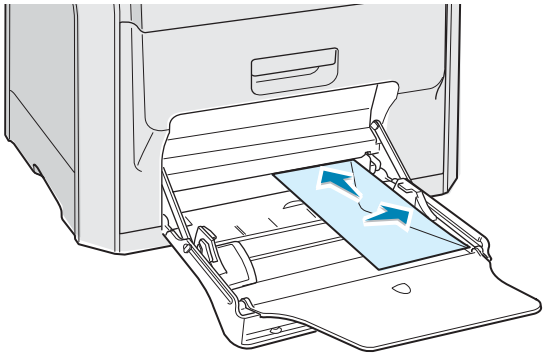

4 Pinch the paper width guide and slide it to the right to touch lightly against the edge of the stack without bending it.

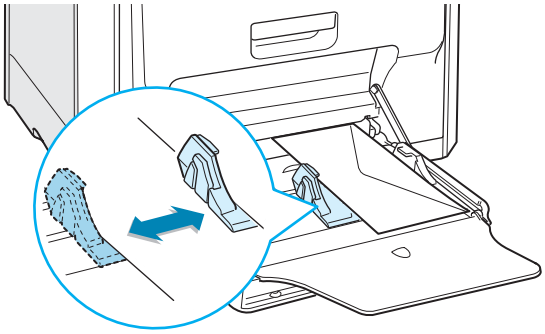

5 When you print, configure the paper source to **MP Tray**, the paper type to **Envelope** and the paper size in the software application. For details, see page 4.7.

Printing on Labels

- Only use labels recommended for laser printers.
- Verify that the labels' adhesive material can tolerate a fusing temperature of 180°C (356°F) for 0.1 seconds.
- Make sure that there is no exposed adhesive material between the labels. Exposed areas can cause labels to peel off during printing, which can cause paper jams. Exposed adhesive can also cause damage to the printer components.
- Never print on the same sheet of labels more than once or print on a partial sheet of labels.
- Do not use labels that are separating from the backing sheet or are wrinkled or damaged in any way.
- To prevent labels from sticking together, do not let the printed label sheets stack up as they are printed out.

To print on labels:

1 Open the Multi-purpose Tray and unfold the paper support.

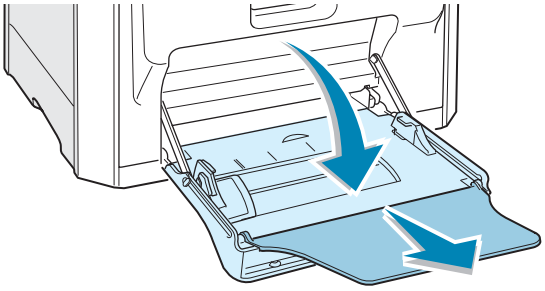

2 Load labels only in the Multi-purpose Tray **with the print side down** and the top, short edge in first. Adjust the guide to fit the width of the labels.

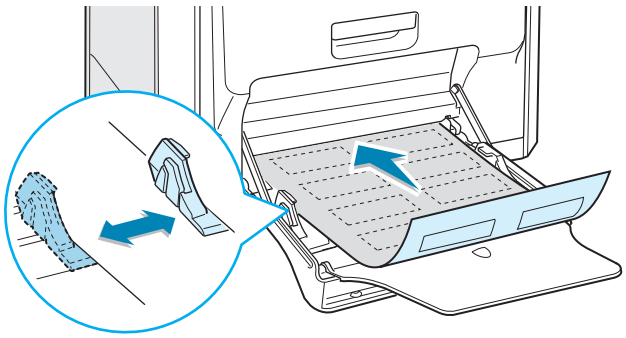

3 When you print, configure the paper source to **MP Tray**, the paper type to **Labels** and the size in the software application. For details, see page 4.7.

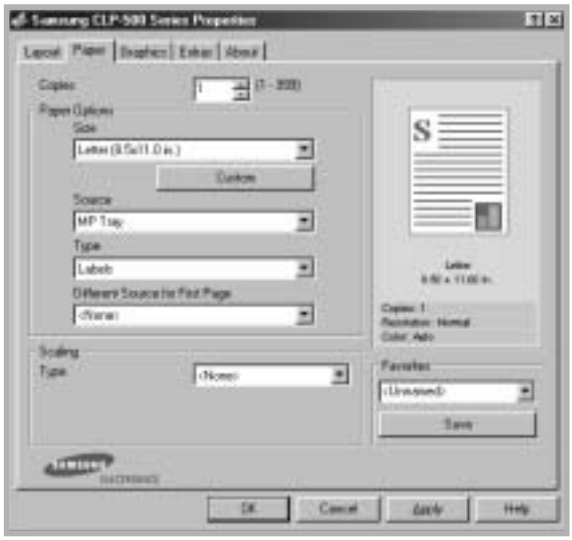

Printing on Transparencies

- When you print a color document do not use transparencies with an attached backing sheet. This may cause print quality problems.
- Only use transparencies recommended for use in laser printers.
- Ensure that transparencies do not have torn edges and are not wrinkled or curled.
- Hold the transparencies by the edges and avoid touching the print side. Oils from your fingers can cause print quality problems.
- Be careful not to leave fingerprints on or scratch the print side.
- You should use the following paper type:
  A4: 003R96002, Letter: 3R3108

NOTE: Before printing on transparencies, make sure that the output support is laid down.

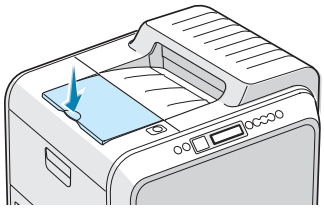

To print on transparencies:

1 Open Multi-purpose Tray and unfold the paper support.

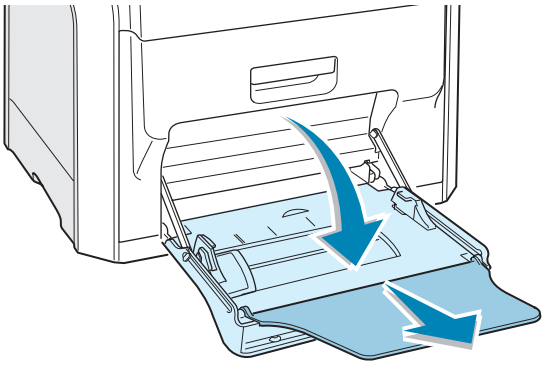

2 Only load transparencies into the Multi-purpose Tray. They must be loaded **with the print side downwards** and **the top with the white leading edge entering the printer first**. Adjust the guide to fit the width of the transparencies.

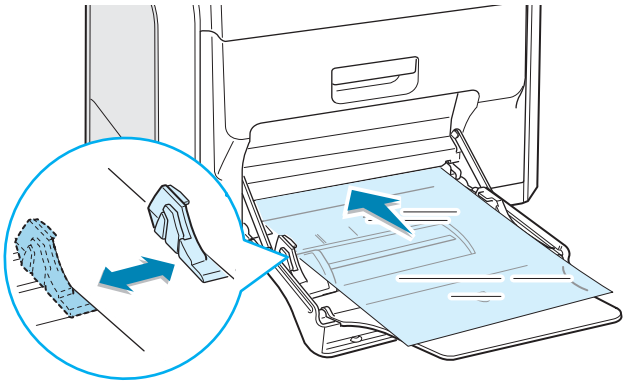

3 When you print, configure the paper source to **MP Tray**, the paper type to **Transparency**, and the paper size in the software application. For details, see page 4.7.

NOTES:

- To prevent transparencies from sticking together, do not let the printed sheets stack up as they are printed out.
- Place transparencies on a flat surface after removing them from the printer.

Printing on Preprinted Paper

- Preprinted paper is paper that has some type of printing placed on it before it is sent through the printer (paper that has a preprinted logo at the top of the page, for example).
- Letterhead must be printed with heat-resistant ink that will not melt, vaporize, or release hazardous emissions when subjected to the printer's fusing temperature of 180°C (356°F) for 0.1 seconds.
- Ink on letterhead must be non-flammable and should not adversely affect any printer rollers.
- Forms and letterhead should be sealed in moisture-proof wrapping to prevent changes during storage.
- Before you load preprinted paper, such as forms and letterhead, verify that the ink on the paper is dry. During the fusing process, wet ink can come off of preprinted paper, reducing the print quality.

To print on preprinted paper:

1 Open the Multi-purpose Tray and unfold the paper support.

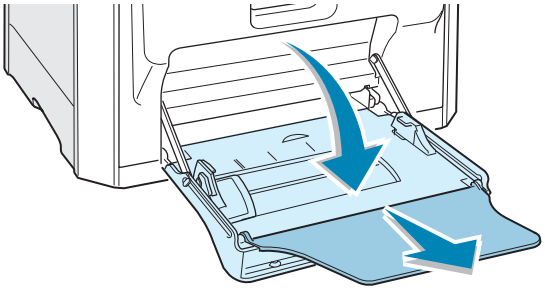

2 Load letterhead only in the Multi-purpose Tray **with the print side down and the top**, **short edge**, **in first**. Adjust the guide to fit the width of the paper stack.

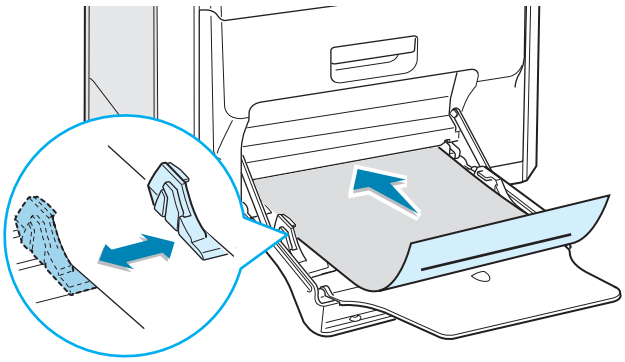

3 When you print, configure the paper source to **MP Tray**, the paper type to **Preprinted**, and the paper size in the software application. For details, see page 4.7.

Printing on Card Stock or Custom-sized Materials

- Postcards, 3.5in. by 5.5in. (index) cards and other custom-sized materials can be printed with your printer. The minimum size is 90mm by 140mm (3.5in. by 5.5in.) and the maximum size is 216mm by 356mm (8.5in. by 14in.).
- Always insert the short edge into the Multi-purpose Tray first. If you want to print in landscape mode, make this selection using your software. Inserting paper long edge first may cause a paper jam.
- Do not load more than 10 cards into the Multi-purpose Tray at a time.
- Do not print on material smaller than 90mm (3.5in.) wide or 140mm (5.5in.) long.
- Set margins at least 4.3mm away from the edges of the material in the software application.

To print on card stock:

1 Open the Multi-purpose Tray and unfold the paper support.

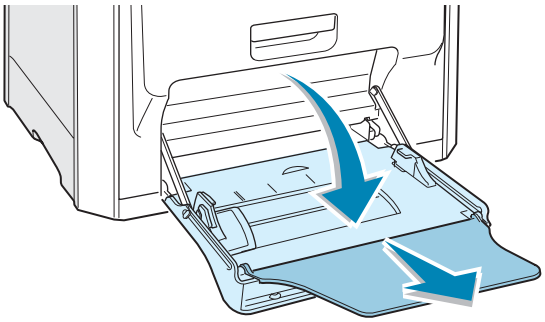

2 Load print material only in the Multi-purpose Tray **with the print side down** and the **short edge first**. Slide the guide until it lightly touches the stack without bending it.

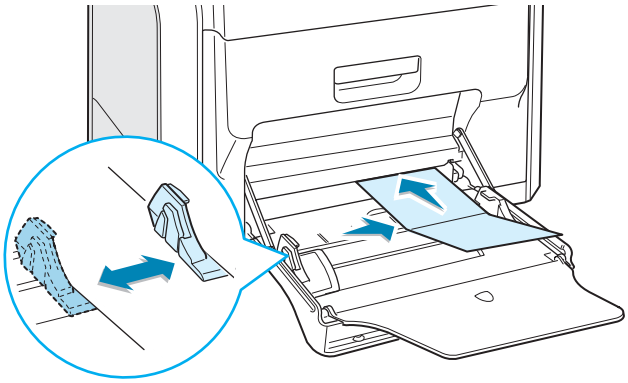

3 When you print, configure the paper source to **MP Tray**, the paper type and size in the software application. For details, see page 4.7.

If the size of your print material is not listed in the **Size** box in the **Paper** tab, click the **Custom** button and set the size manually. See page 4.7.

MEMO

4 PRINTING TASKS

This chapter explains the printing options and common printing tasks.

This chapter includes:

- **Printer Driver Features**
- **Printing a Document**
- **Printer Settings**

Printer Driver Features

Your printer drivers will support the following standard features:

- Paper source selection
- Paper size, orientation and media type
- number of copies

Table below lists a general overview of features supported by your printer drivers.

Feature	SPL			
	Win9x/Me	Win2000/XP	NT4.0	Macintosh
Color mode	Y	Y	Y	Y
Print quality option	Y	Y	Y	N
Poster printing	Y	Y	Y	N
Double-sided printing	Y	Y	Y	N
Booklet printing	Y	Y	Y	N
Multiple pages per sheet (N-up)	Y	Y	Y	Y
Fit to page printing	Y	Y	Y	N
Scale printing	Y	Y	Y	Y
Different source for first page	Y	Y	Y	N
Watermark	Y	Y	Y	Y
Overlay	Y	Y	Y	N
TrueType fonts option	Y	Y	Y	N

NOTES:

- Some of feature are not supported on Mac OS 10.x such as Paper Source, Paper Type, Grayscale and Black&White.
- The Watermark feature is not supported on Mac OS 9.1 or higher.

Printing a Document

The following procedure describes the general steps required for printing from various Windows applications. The exact steps for printing a document may vary depending on the application program you are using. Refer to the User's Guide of your software application for the exact printing procedure.

NOTE: For detailed information about printing from a Macintosh computer or a Linux system, see Appendix A and Appendix B.

4

1 Open the document you want to print.

2 Select **Print** from the **File** menu. The Print window opens. It may look slightly different depending on your application.

You can select the basic print settings within the Print window. These settings include the number of copies and the print range.

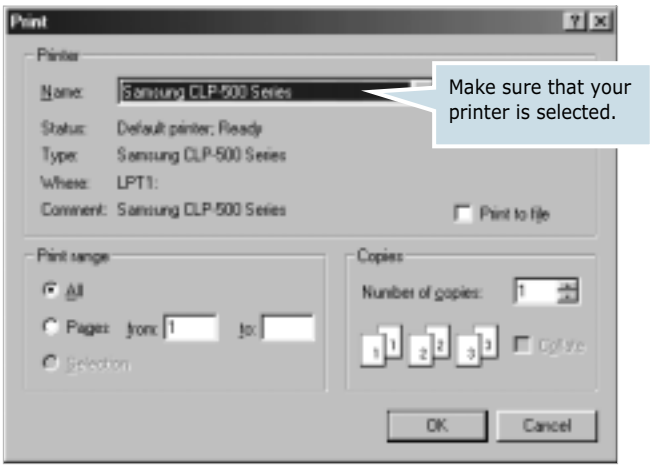

▲ Windows 98

3 To take advantage of the printer features provided by your printer, click **Properties** in the application's print window. For details, see "Printer Settings" on page 4.5

If you see a **Setup**, **Printer** or **Options** button in your Print window, click it instead. Then click **Properties** on the next screen.

4 Click **OK** to close the Properties window.

5 To start the print job, click **OK** in the Print window.

Canceling a Print Job

A print job can be stopped from a program, from a print queue, or from the **Cancel** button (⊗) on the printer.

To stop a print job from the control panel:

- If the print job is already printing, press the **Cancel** button (⊗). The printer finishes printing the pages that are already moving through the printer and deletes the remainder of the print job.
- Pressing the **Cancel** button (⊗) cancels only the current job in the printer. If more than one print job is in the printer memory, you must press the **Cancel** button once for each job after the job starts printing.

To stop a print job from the Printers folder:

If the print job is waiting in a print queue or print spooler, such as the Printer group in Windows, delete the job as follows:

1. From the Windows **Start** menu, select **Settings**.
2. Select **Printers** to open the Printers window, and double-click the **Samsung CLP-550 Series** icon.
3. From the **Document** menu, select **Cancel Printing** (Windows 9x/Me) or **Cancel** (Windows NT 4.0/2000/XP).

▲ Windows 98

Printer Settings

You can use the Samsung CLP-550 Series Properties window, which allows you to access all of the information you need when using your printer. When the printer properties are displayed, you can review and change whatever settings are needed for your print job.

Your printer's Properties window consists of 5 tabs: **Layout**, **Paper**, **Graphics**, **Extras** and **About**.

If you access the printer properties through the **Printers** folder, you can view more Windows-based tabs; refer to your Windows User's Guide.

The printer's Properties window may differ, depending on your operating system. This User's Guide shows the Properties window on Windows 98.

Notes:

- Most Windows applications will override the settings you specify in the printer driver. Change all of the print settings available in the software application first, and change any remaining settings using the printer driver.
- The settings you change remain in effect only while you are using the current program. To make your changes permanent, make them in the **Printers** folder. Follow this procedure:
  1. Click the Windows **Start** menu.
  2. For Windows 95/98/Me/NT 4.0/2000, select **Settings** and then **Printers**.

     For Windows XP, select **Printers and Faxes**.
  3. Select the **Samsung CLP-550 Series** printer.
  4. Click the right mouse button on the printer icon and:
     - In Windows 95/98/Me, select **Properties**.
     - In Windows 2000/XP, select **Printing Preferences**.
     - In Windows NT 4.0, select **Document Default**.
  5. Change the settings on each tab, and click **OK**.

Layout tab

The **Layout** tab provides options for you to adjust how the document appears on the printed page. The **Layout Options** includes **Multiple Pages per Side**, **Booklet Printing**, and **Poster**. You can also use **Duplex(Double-sided Duplex)** in this tab. See page 4.3 for more information on accessing your software application.

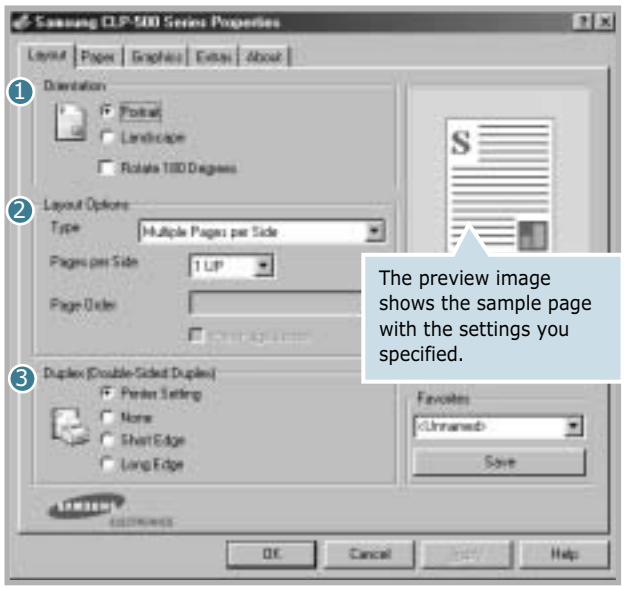

Property	Description
❶ **Orientation**	**Orientation** allows you to select the direction in which information is printed on a page. • **Portrait** prints across the width of the page, letter style. • **Landscape** prints across the length of the page, spreadsheet style. If you want to turn the page upside down, select **Rotate 180 Degrees**. 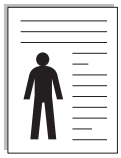 ▲ portrait ▲ Landscape
❷ **Layout Options**	**Layout Options** allows you to select advanced printing options. For details , see Chapter 5, "Advanced Printing."
❸ **Duplex(Double -Sided Duplex)**	**Duplex(Double-Sided Duplex)** allows you to automatically print two-sided documents. If you use the printer driver's default setting, select **Printer Setting**. For details, see page 5.3.

Paper tab

You can use the following options for the basic paper handling. See page 4.3 for more information about accessing your software application.

Click the **Paper** tab to display the Paper properties.

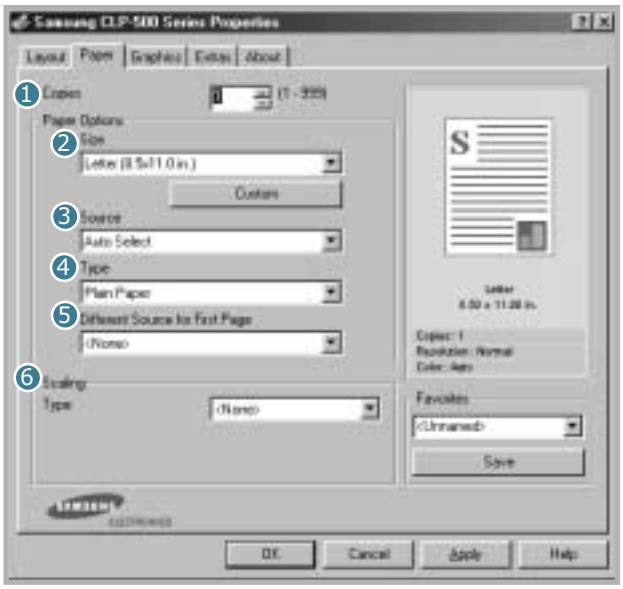

Property	Description
❶ **Copies**	**Copies** allows you to choose the number of copies to be printed. You can enter up to 999.
❷ **Size**	**Size** allows you to choose the size of the paper loaded in the tray. If the required size is not listed in the **Size** box, click **Custom**. When the **Custom Paper Size** window appears, set the paper size and click **OK**. The setting appears on the list so that you can select it. 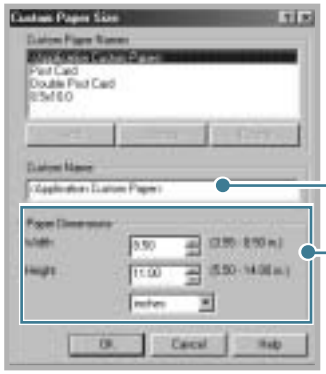 Enter the custom name you want to use. Enter the paper size.

Property	Description
❸ **Source**	Make sure that **Source** is set to the corresponding paper tray. Use the **Manual** source when printing to special material. You have to load one sheet at a time into the Multi-purpose Tray. See page 3.9. If the paper source is set to **Auto Select**, the printer automatically picks up print material in the following order: Multi-purpose Tray, Tray1, Optional Tray2.
❹ **Type**	Make sure that **Type** is set to **Plain Paper**. If you load a different type of print material, select the corresponding paper type. For more information on print material, refer to Chapter 3, "Using Print Materials." If you use cotton paper, which weighs from 16lb to 24lb (60~90g/m^2), such as Gilbert 25% and Gilbert 100%, set the paper type to **Cotton paper** for the best printing. To use recycled paper, which weighs from 20lb to 24lb (75~90g/m^2), or colored paper, select **Recycled Paper**.
❺ **Different Source for First Page**	This property allows you to print the first page using a different paper type from the rest of the document. You can select the paper source for the first page. For example, load thick stock for the first page into the Multi-purpose Tray, and plain paper into Tray1. Then, select **Tray1** in the **Source** option and **MP Tray** in the **Different Source for First Page** option.
❻ **Scaling**	**Scaling** allows you to automatically or manually scale your printer job on a page. You can choose from **None**, **Scale Printing**, **Fit to Page**. For details, see page 5.4 and page 5.5.

Graphics tab

Use the following graphic options to adjust the print quality for your specific printing needs. See page 4.3 for more information about accessing your software application.

Click the **Graphics** tab to display the Graphics properties.

Property	Description
❶ **Resolution**	You can select the printing resolution by choosing from **1200 dpi (Best)**, **600 dpi (Normal)**. The higher the setting, the sharper the printed characters and graphics. The higher settings may increase the time it takes to print a document.
❷ **Color Mode**	You can set the color options. Setting to **Color** typically produces the best possible print quality for color documents. If you want to print a color document in grayscale, select **Grayscale**.

Property	Description
❷ **Color Mode** *(Continued)*	If you click **Adjust Color**, you can change the appearance of the document's images. 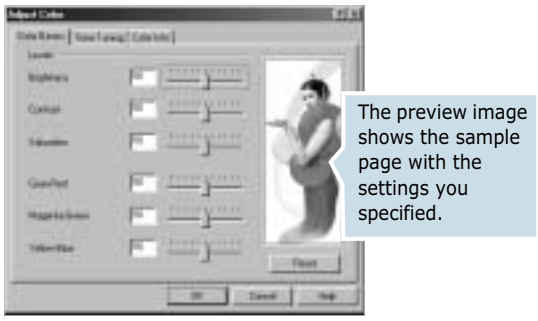 The preview image shows the sample page with the settings you specified. • **Color Basics**: You can adjust the appearance of the images by changing the settings in the **Levels** option. • **Tone Tuning**: You can adjust the tonal range of images by changing the **Tone Curve** option. • **Color Info**: This tab contains information about the driver's color conversion system.
❸ **Advanced Options**	You can make advanced settings by clicking the **Advanced Options** button. 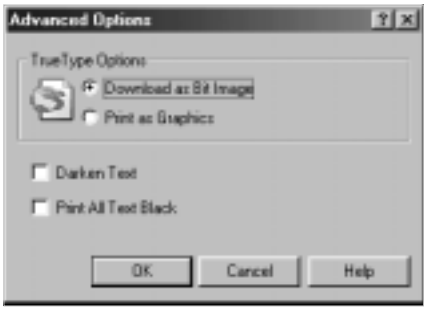 **TrueType Options** This option is only avaliable when you use Windows 9x. This option determines what the driver tells the printer about how to image the text in your document. Select the appropriate setting according to the status of your document. • **Download as Bit Image:** When this option is selected, the driver will download the font data as bitmap images. Documents with complicated fonts, such as Korean or Chinese, or various types of fonts will print faster in this setting.

Property	Description
❸ **Advanced Options** *(Continued)*	• **Print as Graphics:** When this option is selected, the driver will download any fonts as graphics. When printing documents with high graphic content and relatively few TrueType fonts, printing performance (speed) may be enhanced in this setting. • **Darken Text**: When this option is selected all text in your document prints darker than normal. • **Print All Text Black:** When this option is selected all text in your document prints solid in black, regardless of the color it appears on the screen. When it is not selected colored text prints in shades of gray.

Extras tab

See page 4.3 for more information about accessing your software application. Click the **Extras** tab to access the following features:

Option	Description
❶ **Watermark**	You can create a background image of text to print on each page of your document. See "Using Watermarks" on page 5.10.
❷ **Overlay**	Overlays are often used to take the place of preprinted forms and letterhead paper. See "Using Overlays" on page 5.13.
❸ **Output Options**	**Print Order:** You can set the sequence for the pages to print. Select the print order from the drop-down list. • **Normal**: Your printer prints all pages from the first page to the last page. • **Reverse All Pages**: Your printer prints all pages from the last page to the first page. • **Print Odd Pages**: Your printer prints only the odd pages of the document. • **Print Even Pages**: Your printer prints only the even pages of the document. **Reverse Duplex:** In duplex printing, your printer reverses the order of the printed pages.

Option	Description
❸ **Output Options** *(Continued)*	**Reprint When Jammed:** When this option is checked, the printer keeps the image for a printed page until the printer signals that the page has successfully exited the printer. When a paper jam occurs, the printer reprints the last page after you clear the jam.

About tab

Use the **About** tab to display the copyright notice and the version number of the driver. If you have an Internet browser, you can connect to the Internet by clicking the website icon. See page 4.3 for more information about accessing your software application.

Using a Favorite Setting

The **Favorites** option, which is visible on each tab, allows you to save the current properties settings for future use.

To save a Favorites item:

1 Change the settings as needed on each tab.

2 Enter a name for the item in the **Favorites** input box.

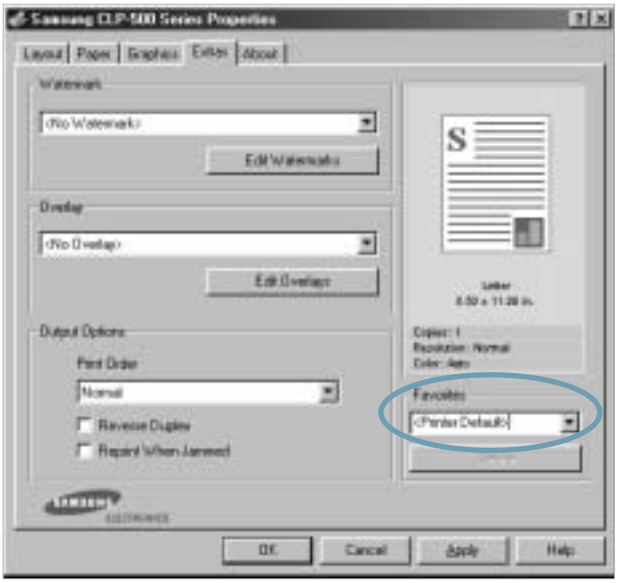

3 Click **Save**.

When you save **Favorites**, all current driver settings are saved.

To use a saved setting, select the item from the **Favorites** drop down list.

The printer is now set to print according to the Favorites setting you selected.

To delete a Favorites item, select it from the list and click **Delete**.

You can also restore the printer driver's default settings by selecting **<Printer Default>** from the list.

Using Help

Your printer has a help screen that can be activated using the **Help** button in the printer's Properties window. The help screen gives you detailed information about the printer features provided by the printer driver.

You can also click ? in the upper right hand corner, and then click on any setting.

5 ADVANCED PRINTING

This chapter explains the printing options and advanced printing tasks.

This chapter includes:

- **Printing on Both Sides of the Paper**
- **Scaling Your Document**
- **Fitting Your Document to a Selected Paper Size**
- **Printing Multiple Pages on One Sheet of the Paper**
- **Printing Posters**
- **Printing Booklets**
- **Using Watermarks**
- **Using Overlays**

Printing on Both Sides of the Paper

You can print on both sides of the paper automatically. Before printing, decide how you want your documents oriented.

The options are:

- **Long Edge**, which is the conventional layout used in book binding, or portrait.
- **Short Edge**, which is the type often used with calendars, or landscape.

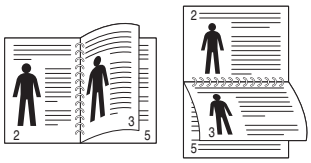

▲ Long Edge

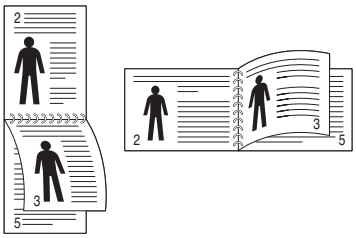

▲ Short Edge

NOTES:

- Do not print on both sides of labels, transparencies, envelopes, or thick paper. Paper jamming and damage to the printer may result.
- To use double-sided printing, you can use only the following paper sizes: A4, Letter, Legal and Folio that weigh 20~24lbs (75~90g/m^2).

There are two ways to enable or disable double-sided printing:

Using the Control Panel Menu

Select **Duplex** in the **Layout** menu. Set the **Duplex Margin** item in the same menu, if necessary. See page 2.7 for more details.

For further details about using the control panel menu, see page 2.5.

From the software application

1 When you change the print settings from your software application, access the printer's Properties. See page 4.3.

2 From the **Layout** tab, select the paper orientation.

3 From the **Duplex(Double-Sided Duplex)** section, select either Printer Setting, None, Short Edge, or Long Edge.

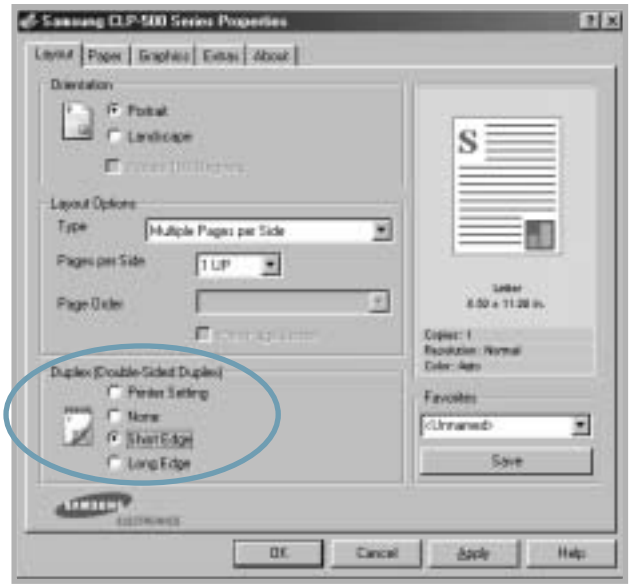

4 Click the **Paper** tab and select the paper source, size and type.

5 Click **OK** and print the document.

NOTE:
- The settings in the software application override those on the control panel.
- When you select the **Reverse Duplex** option in the **Extra** tab, your printer reverses the order of the printed pages.

Scaling Your Document

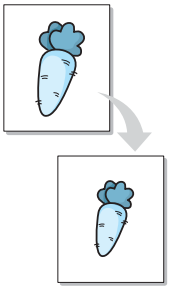

You can scale your print job on a page.

1 When you change the print settings from your software application, access the printer Properties. See page 4.3.

2 From the **Paper** tab, select **Scale Printing** from the **Type** drop-down list.

3 Enter the scaling rate in the **Percentage** input box.

You can also click the ▲ or ▼ button.

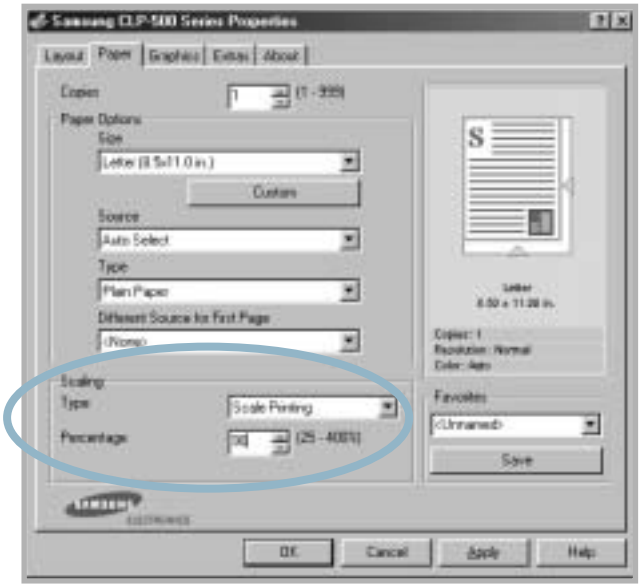

4 Select the paper source, size and type in **Paper Options**.

5 Click **OK** and print the document.

Fitting Your Document to a Selected Paper Size

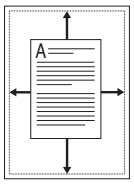

This printer feature allows you to scale your print job to any paper size regardless of the digital document size. This can be useful when you want to check the fine details on a small document.

1 When you change the print settings from your software application, access the printer Properties. See page 4.3.

2 From the **Paper** tab, select **Fit to Page** from the **Type** drop-down list.

3 Select the correct size from the **Target Paper** drop-down list.

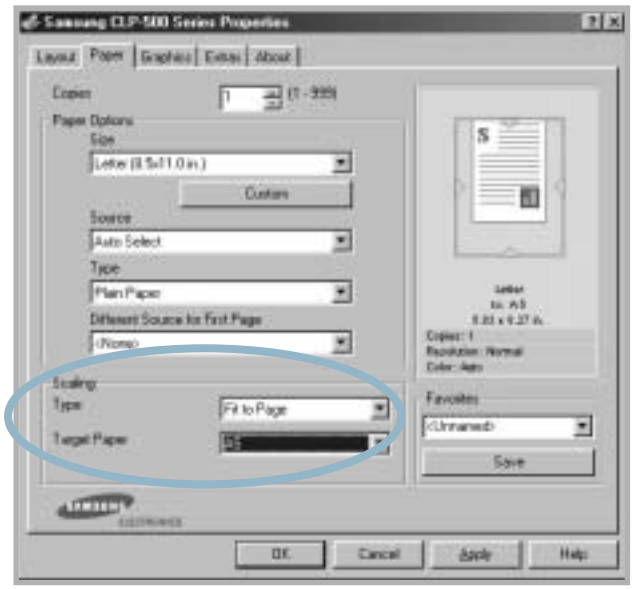

4 Select the paper source, size and type in **Paper Options**.

5 Click **OK** and print the document.

Printing Multiple Pages on One Sheet of the Paper

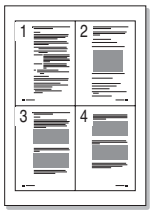

You can select the number of pages to print on a single sheet of paper. To print more than one page per sheet, the pages are smaller and arranged in the order you specify on the sheet. You can print up to 16 pages on one sheet.

1 To change the print settings from your software application, access the printer Properties. See page 4.3.

2 From the **Layout** tab, choose **Multiple Pages per Side** from the **Type** drop-down list.

3 Select the number of pages you want to print per sheet (1, 2, 4, 9 or 16) from the **Pages per Side** drop-down list.

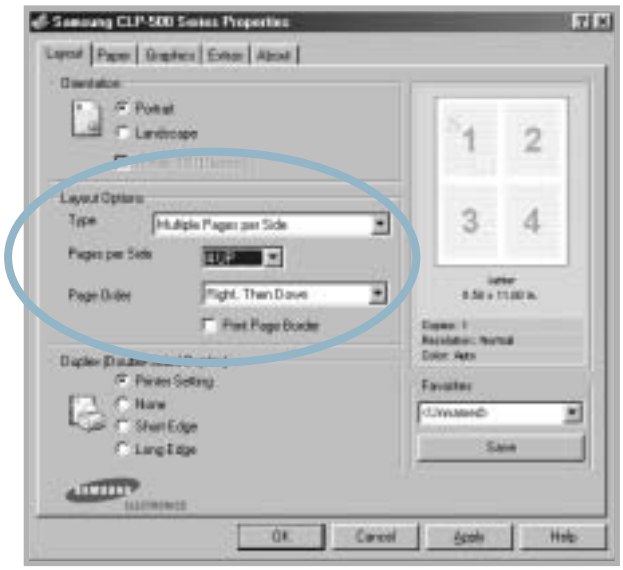

4 Select the page order from the **Page Order** drop-down list, if necessary.

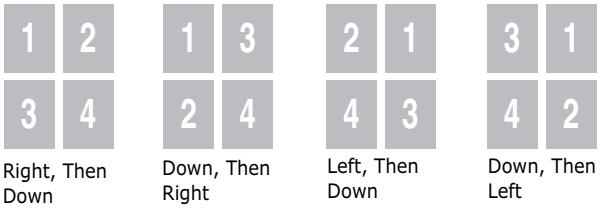

The **Page Order** drop down list is enabled only if the number of pages per side is 4, 9 or 16.

Check **Print Page Border** to print a border around each page on the sheet. **Print Page Border** is enabled only if the number of pages per side is 2, 4, 9, or 16.

5 Click the **Paper** tab and select the paper source, size and type.

6 Click **OK** and print the document.

Printing Posters

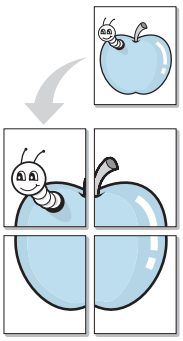

This feature allows you to print a single-page document onto 4, 9 or 16 sheets of paper, for the purpose of pasting the sheets together to form one poster-sized document.

1 When you change the print settings from your software application, access the printer Properties. See page 4.3.

2 From the **Layout** tab, select **Poster** from the **Type** drop-down list.

3 Configure the poster option:

You can select the page layout from 2x2, 3x3 or 4x4. If you select 2x2, the image is automatically stretched to cover 4 physical pages.

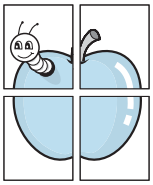

▲ 2x2

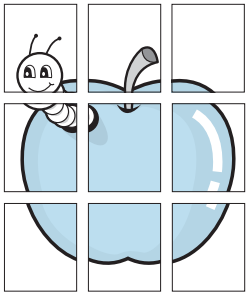

▲ 3x3

Specify an overlap in millimeters or inches to make it easier to pasting the sheets together.

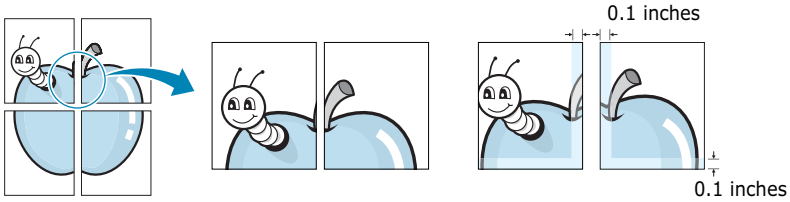

4 Click the **Paper** tab and select the paper source, size and type.

5 Click **OK** and print the document. You can complete the poster by pasting the sheets together.

Printing Booklets

The Booklet printing feature allows you to print your document on both sides of the paper and arranges the pages so that the paper can be folded in half after printing to produce a booklet.

1 When you change the print settings from your software application, access the printer Properties. See page 4.3.

2 From the **Layout** tab, choose **Booklet Printing** from the **Type** drop-down list.

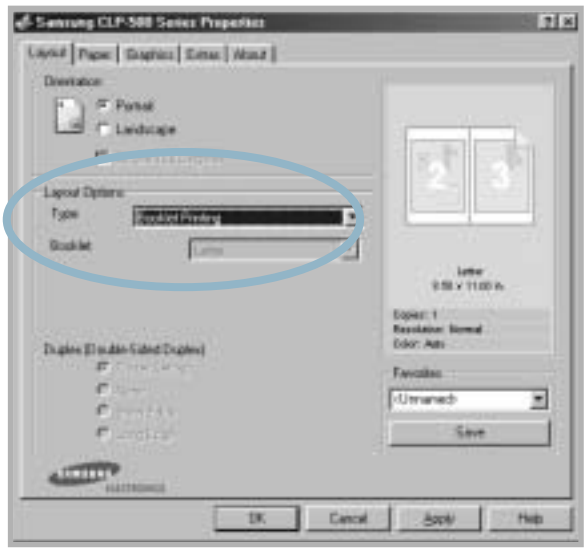

NOTE: The booklet printing option is available when A4, Letter, Legal or Folio size is selected in the **Size** option on the **Paper** tab.

3 Click the **Paper** tab, and select the paper source, size and type.

4 Click **OK** and print the document.

5 After printing, fold and staple the pages.

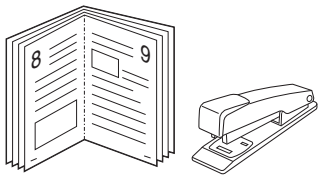

Using Watermarks

The Watermark option allows you to print text over an existing document. For example, you may want to have large gray letters reading "DRAFT" or "CONFIDENTIAL" printed diagonally across the first page or all of the pages of a document.

There are several predefined watermarks that come with your printer, and they can be modified or you can add new ones to the list.

Using an Existing Watermark

1 When you change the print settings from your software application, access the printer Properties. See page 4.3.

2 Click the **Extras** tab, and select a watermark from the **Watermark** drop-down list. You will see the selected watermark in the preview image.

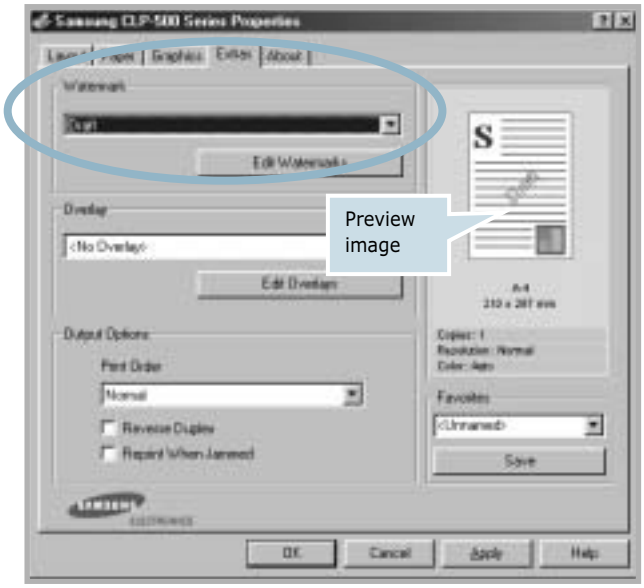

3 Click **OK** and start printing.

NOTE: The preview image shows how the page will look when it is printed.

Creating a Watermark

1 When you change the print settings from your software application, access the printer Properties. See page 4.3.

2 Click the **Extras** tab, and click the **Edit Watermarks** button in the **Watermark** section. The Watermarks window appears.

3 Enter a text message in the **Watermark Message** box. You can enter up to 40 characters and it displays in the preview window.

When the **First Page Only** box is checked, the watermark prints on the first page only.

4 Select the watermark options.

You can select the font name, style, color, grayscale level and size from the **Font Attributes** section and set the angle of the watermark from the **Message Angle** section.

5 Click **Add** to add a new watermark to the list.

6 When you finish editing, click **Ok** and start printing.

To stop printing the watermark, select **<No Watermark>** from the **Watermark** drop-down list.

Editing a Watermark

1. When you change the print settings from your software application, access the printer Properties. See page 4.3.

2. Click the **Extras** tab, and click the **Edit Watermarks** button in the **Watermark** section. The Watermarks window appears.

3. Select the watermark you want to edit from the **Current Watermarks** list to change the watermark message and the options. Refer to page 5.11.

4. Click **Update** to save the changes.

5. Click **Ok**.

Deleting a Watermark

1. When you change the print settings from your software application, access the printer Properties. See page 4.3.

2. From the **Extras** tab, click the **Edit Watermarks** button in the **Watermark** section. The Watermarks window appears.

3. Select the watermark you want to delete from the **Current Watermarks** list and click **Delete**.

4. Click **Ok**.

Using Overlays

What is an Overlay?

An overlay is text and/or images stored on the computer hard disk drive (HDD) as a special file format that can be printed on any document. Overlays are often used to take the place of preprinted forms and letterhead paper. Rather than using preprinted letterhead, you can create an overlay containing the exact same information that is currently on your letterhead. To print a letter with your company's letterhead, you need only tell the printer to print the letterhead overlay on your document.

Creating a New Page Overlay

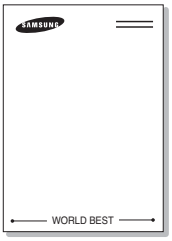

To use a page overlay, you must create a new page overlay containing your logo or image.

1. Create or open a document containing text or an image for use in a new page overlay. Position the items exactly as you wish them to appear when printed as an overlay. If needed, save the file for later use.

2. When you change the print settings from your software application, access the printer Properties. See page 4.3.

3. Click the **Extras** tab, and click the **Edit Overlays** button in the **Overlay** section.

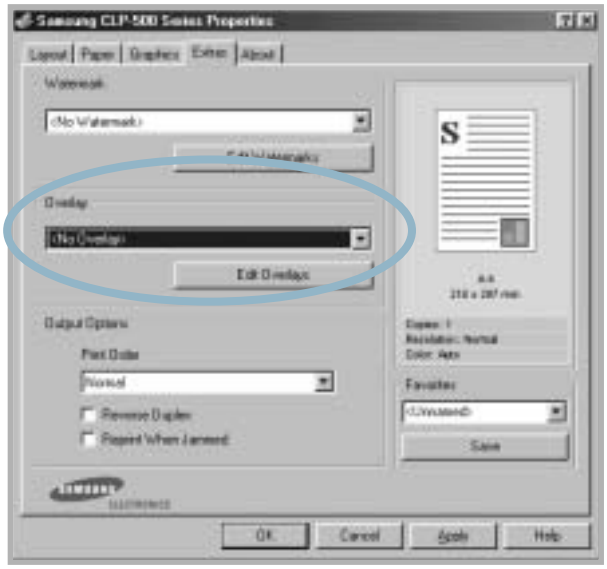

4 In the Overlays window, click **Create Overlay**.

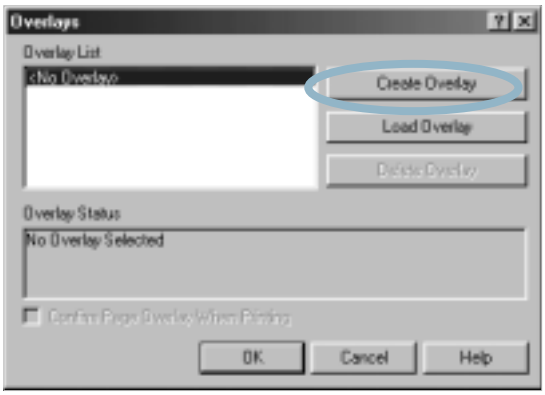

5 In the Create Overlay window, type a name of up to eight characters in the **File name** box. Select the destination path, if necessary. (The default is C:\Formover).

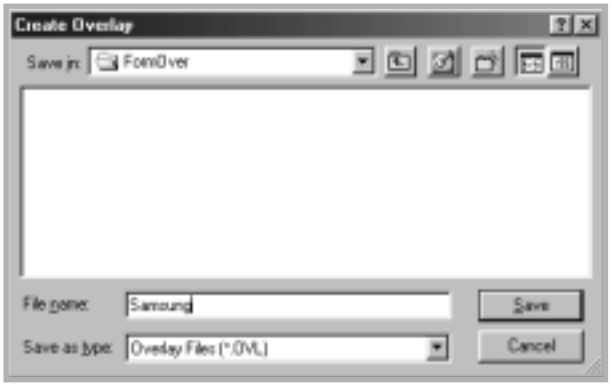

6 Click **Save**. The name appears on the **Overlay List** box.

7 Click **OK** or **Yes** to finish creating.

The file is not printed out. Instead it is stored on your computer hard disk drive.

NOTE: The overlay document size must be the same as the documents you print with the overlay. Do not create an overlay with a watermark.

Using a Page Overlay

After an overlay has been created, it is ready to be printed with your document. To print an overlay with a document:

1. Create or open the document you want to print.

2. When you change the print settings from your software application, access the printer Properties. See page 4.3.

3. Click the **Extras** tab.

4. Select an overlay from the **Overlay** drop-down list box.

5. If the overlay file you want does not appear on the **Overlay** list, click the **Edit Overlays** button and **Load Overlay**, and select the overlay file.

If you have stored the overlay file you want to use in an external source, you can also load the file when you access this Load Overlay window.

After you select the file, click **Open**. The file appears in the **Overlay List** box and is available for printing. Select the overlay from the **Overlay List** box.

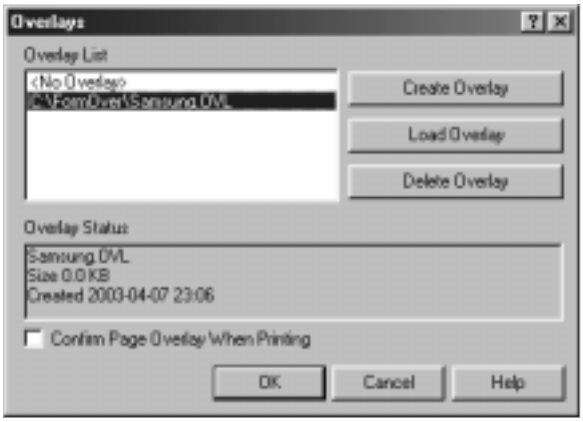

6 If necessary, click **Confirm Page Overlay When Printing**. If this box is checked, a message window appears each time you submit a document for printing, asking you to confirm your wish to print an overlay on your document.

If this box is empty and an overlay has been selected, the overlay automatically prints with your document.

7 Click **OK** or **Yes** until the printing starts.

The selected overlay downloads with your print job and prints on your document.

NOTE: The resolution of the overlay document must be the same as that of the document you are printing with the overlay.

Deleting a Page Overlay

You can delete page overlays that you no longer use.

1 In the printer Properties window, click the **Extras** tab.

2 Click **Edit Overlays** button in the **Overlay** section.

3 Select the overlay you want to delete from the **Overlay List** box.

4 Click **Delete Overlay**.

5 Click **OK** until you exit the Print window.

6 MAINTAINING YOUR PRINTER

This chapter provides information for maintaining your printer and suggestions for high-quality and economical printing.

This chapter includes:

- **Printing a Configuration Page**
- **Replacing the Supplies**
- **Managing the Toner Cartridges**
- **Replacing the Toner Cartridges**
- **Replacing the Waste Toner Container**
- **Replacing the Imaging Unit**
- **Replacing the Transfer Belt**
- **Cleaning the Printer**
- **Replacement Part**

Printing a Configuration Page

You can print a configuration page from the printer's control panel. Use the configuration page to view the current settings, to help troubleshoot problems, or to verify the installation of optional accessories, such as memory or an optional tray.

To print the configuration page:

1. In ready mode press the **Menu** button ( ) on the control panel until you see 'Information' on the bottom line of the display.

2. Press the **Enter** button ( ) to access the menu.

3. Press the **Enter** button ( ) when 'Configuration' displays on the bottom line.

   The configuration page prints out.

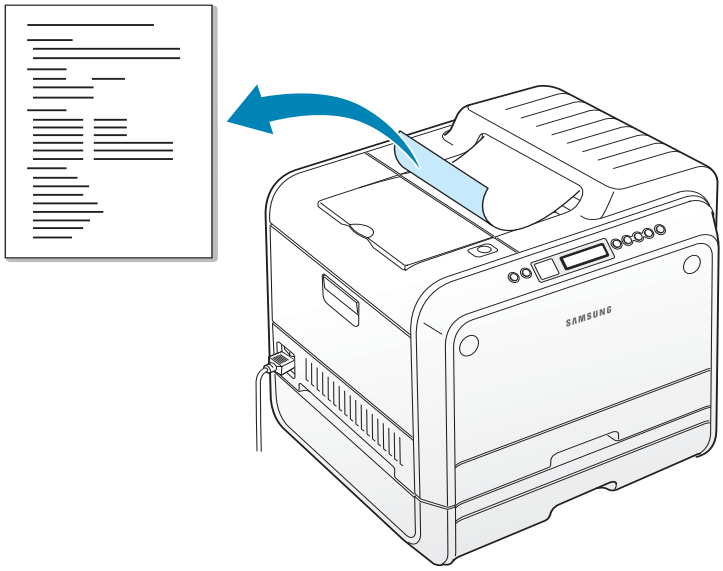

Replacing the Supplies

From time to time, you need to replace the following items to maintain top performance and to avoid print quality problems. Refer to the table below:

Item(s)	Printer message	Pages Printed	See page
Black toner cartridge	Replace Black Toner	7,000 pages*	6.8.
Color toner cartridges	Replace [Color] Toner	5,000 pages*	6.8.
Waste toner container	Waste Toner Tank Full/Not Install	3,000 images**	6.11.
Imaging Unit	Replace Imaging Unit	50,000 images**	6.14.
Transfer Belt	Replace Transfer Belt	50,000 images**	6.22.

*Average A4-/letter-sized pages counts based on 5% coverage of individual colors on each page. Usage conditions and print patterns may cause results to vary.

**Image counts are based on one color on each page. If you print documents in full colors (Cyan, Magenta, Yellow, Black) then 1 page is equivalent to 4 images and these three items are reduced to 25% of the indicated value.

Managing the Toner Cartridges

Toner Cartridge Storage

To get the maximum results from the toner cartridge, keep the following guidelines in mind:

- Do not remove the toner cartridges from their packages until you are ready to use them.
- Do not refill the toner cartridges. **The printer warranty does not cover damage caused by using a refilled cartridge.**
- Store the toner cartridges in the same environment as the printer.
- To prevent damage to the toner cartridges, do not expose them to light for more than a few minutes.

Toner Cartridge Life Expectancy

The life of the toner cartridge depends on the amount of toner that your print jobs require. When printing text at 5% coverage, a new toner cartridge lasts an average of 7,000 pages for black and 5,000 pages for each color. The initial toner cartridge supplied with the printer lasts an average of 2,000 pages for black and 1,500 pages for each color.

At any time, you can verify the life expectancy by checking the toner level. See the below.

Checking the Remaining Toner

You can check the level of toner left in each cartridge.

1. In ready mode press the **Menu** button ( ) on the control panel until you see 'Setup' on the bottom line of the display.
2. Press the **Enter** button ( ) to access the menu.
3. Press the scroll button (or) until 'Maintenance' displays on the bottom line.
4. Press the **Enter** button ( ).
5. When 'Check Toner' displays on the bottom line, press the **Enter** button ( ).

6 Press the scroll button (◁ or ▷) until the color of the toner cartridge you want to check displays on the bottom line.

7 Press the **Enter** button (✳).

The display shows the percentage of the remaining toner.

Redistributing the Toner

When a toner cartridge is nearly empty, faded or light areas may appear. Equally it is possible that colored images may have incorrect colors due to incorrect mixing of the toner colors when one of the colored toner cartridge is nearly empty. 'Ready [Color] Low Toner' appears on the display. The printer can continue to print using the current toner cartridge until the control panel displays a message telling you to replace the cartridge.

You may be able to temporarily improve the print quality by redistributing the toner. The control panel display tells you which color cartridge is low in toner.

1 Using the handle, completely open the left cover until it is at right angles to the main frame and the toner cartridges are ejected.

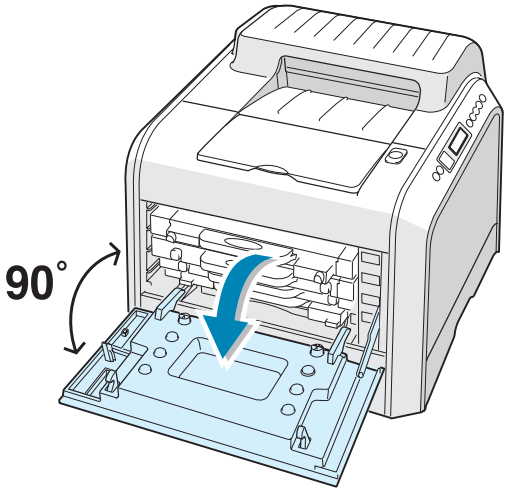

2 Pull the handle lightly first, and then holding the used toner cartridge, remove it.

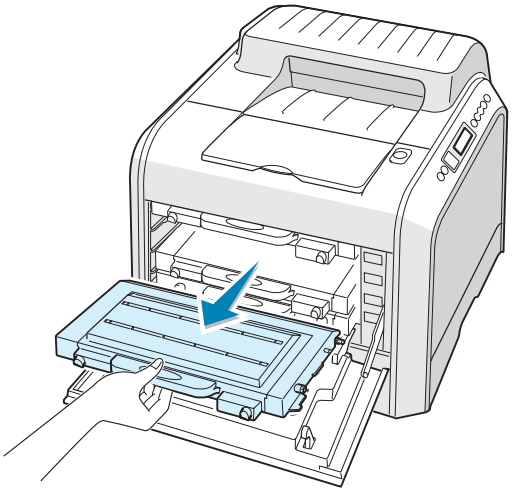

CAUTION: If you open the left cover for a few minutes, the imaging unit can be exposed to light. This causes damage to the imaging unit.

3 Holding both sides of the toner cartridge, gently roll it from side to side to redistribute the toner.

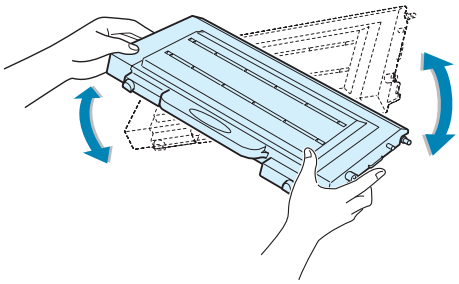

NOTE: If toner gets on your clothing, wipe it off with a dry cloth and wash it in cold water. Hot water sets toner into fabric.

4 Slide the toner cartridge back into the printer.

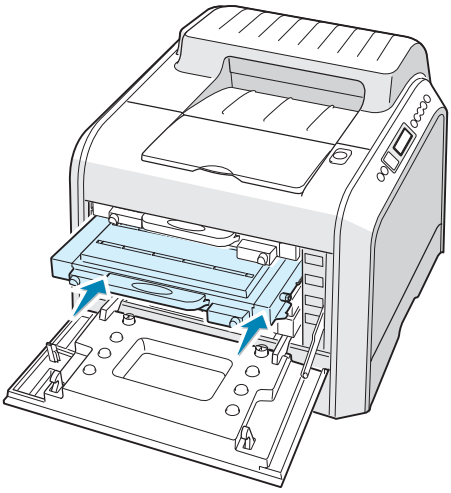

5 Close the left cover. Make sure that the cover is securely latched.

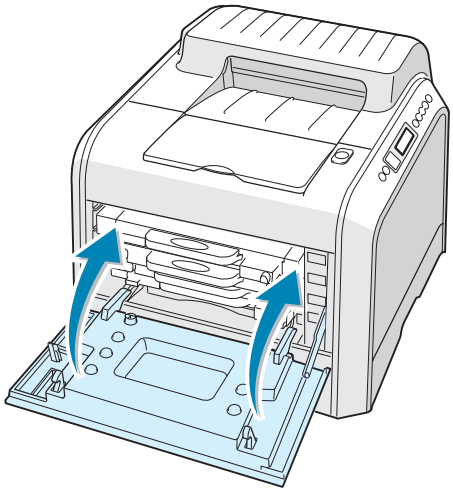

If you are installed the toner cartridges wrong, the left cover will not close properly. Check again to make sure the colors correspond. Never use force to close the cover.

Replacing the Toner Cartridges

The printer uses four colors and has a different toner cartridge for each one: cyan (C), magenta (M), yellow (Y), and black (K).

Replace a toner cartridge when the printer control panel displays 'Replace [Color] Toner'. The control panel display tells you which color needs to be replaced.

1 Turn the printer off, then wait a few minutes for the printer to cool.

2 Using the handle, completely open the left cover until it is at right angles to the main frame and the toner cartridges are ejected.

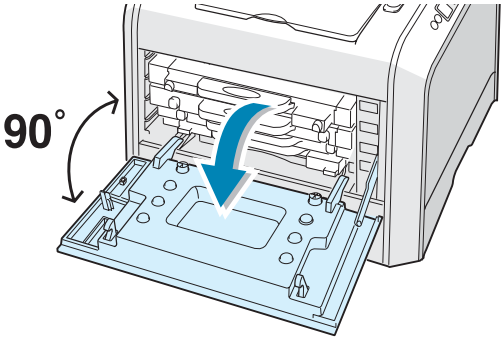

3 Pull the handle lightly first, and then holding the used toner cartridge, remove it.

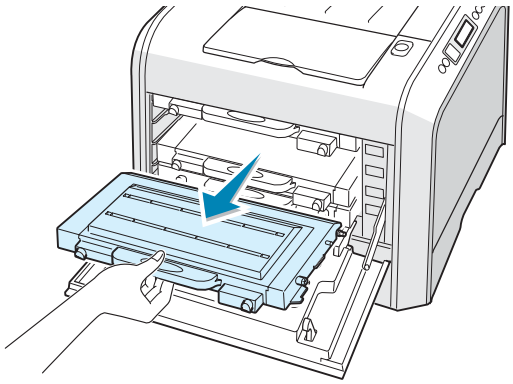

CAUTION: If you open the left cover for a few minutes, the imaging unit can be exposed to light. This causes damage to the imaging unit. Close the top and left cover should the setup need to be halted for any reason.

4 Take a new toner cartridge out of the package.

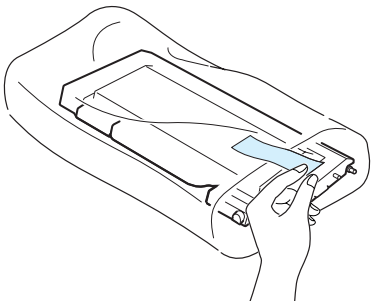

CAUTION: Don't use sharp objects, such as a knife or scissors, to open the toner cartridge package. You could damage the surface of the toner cartridge.

5 Holding both sides of the toner cartridge, gently roll it from side to side to distribute the toner.

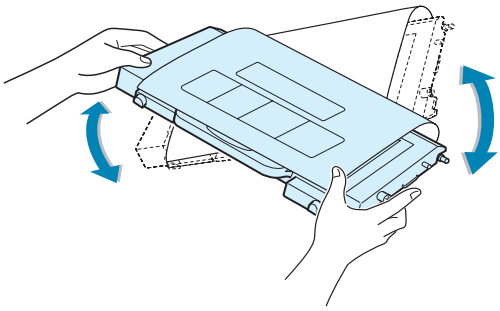

6 Place the toner cartridge on a flat surface as shown and remove the paper covering the toner cartridge by removing the tape.

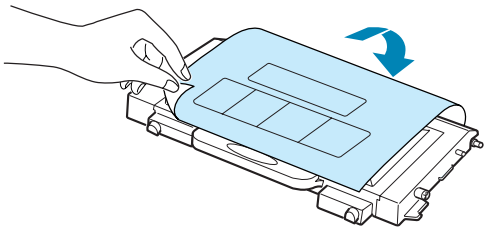

NOTE: If toner gets on your clothing, wipe it off with a dry cloth and wash it in cold water. Hot water sets toner into fabric.

7 Make sure that the color of the toner cartridge matches the color slot and then slide the new toner cartridge into the printer. Using both hands, grip the cartridge to insert into the slot. Then hold the handle to slide the cartridge in.

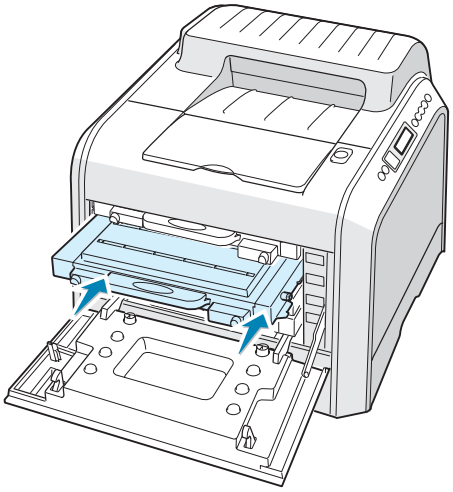

- When the toner cartridges are correctly installed the yellow and black cartridges are not fully inserted. These will be pushed into place when you close the left cover.

8 Close the left cover. Make sure that the cover is securely latched, and then turn the printer on.

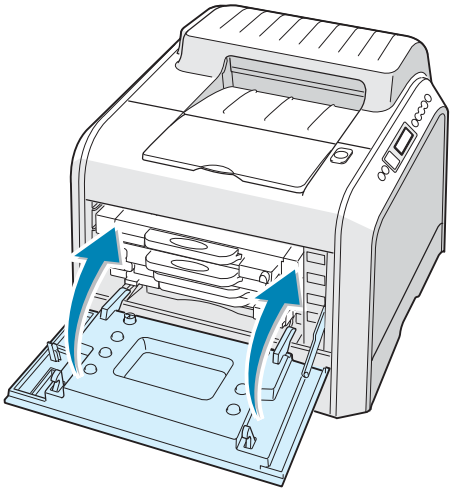

If you have installed the toner cartridges wrongly, the left cover will not close properly. Check again to make sure the cartridge colors correspond to those marked on the right hand side. Never use force to close the cover.

Replacing the Waste Toner Container

Replace the waste toner container when the control panel displays 'Waste Toner Tank Full/Not Install'.

1 Unlatch the front cover, by quickly pressing and releasing it using the depressions at the top.

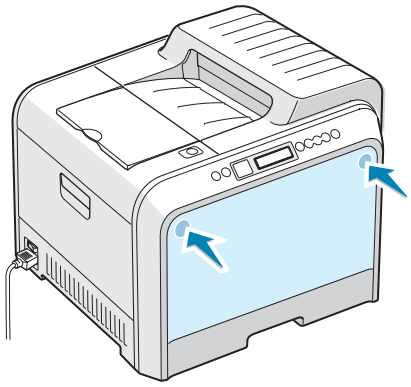

2 Push the lock lever up and pull the waste toner container out.

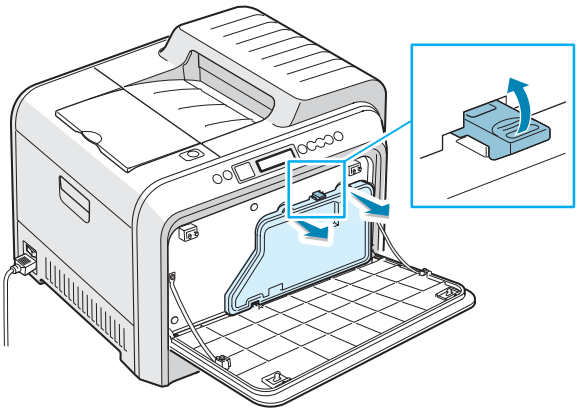

NOTE: Make sure that you lay the waste toner container on a flat surface so that the toner does not spill.