EMI Test Report

According to FCC Part 15 Subpart B

Project No.	**LBE051902**
Equipment under Test	
Applicant	Samsung Electronics Co., Ltd. 416 Maetan 3-Dong, Yeongtong-Gu, Suwon-Si, Gyeonggi-Do, Korea, 443-742
FCC ID	A3LDC60CPS
Product Name	Laser Printer
Model Name	DC60CPS
Manufacturer	Samsung Electronics Co., Ltd.
Date of Test	August 5, 2005
Issued Date	August 8, 2005

	Name/Position	Signature
Tested by	Kyeong Dong, Kim Test Engineer	
Reviewed by	No Cheon, Park Manager of EMC Lab.	
Authorized by	Seung Kyu, Cha Chief of EMC Lab.	

1. This test reports does not constitute an endorsement by NIST/NVLAP or U.S Government.
2. This test report is to certify that the tested device properly complies with the requirements of FCC Rules and Regulations Part 15 Subpart B Unintentional Radiators.
   All tests necessary to show compliance to the requirements were and these results met the specifications requirement.

This laboratory is registered by the NIST/NVLAP, U.S.A.
The test reported herein have been performed in accordance with its terms of registration.

NVLAP LAB CODE 200623-0

3. FCC filing Registration Number : 873282

This report shall not be reproduced except in full, without the written approval of SEC EMC Testing laboratory.

Table of Contents

1. General Information

1.1 Basic Information related Product

1.2 Detail Information related Product

1.3 Operating mode and condition

1.4 Test System Details

1.5 Equipment Modifications

1.6 Test Procedure

1.7 Test Configuration

1.8 Applied Standard

1.9 Test Facility

2. Summary of Test Results

3. Description of individual tests

3.1 Conducted Emission

3.2 Radiated Emission

4. Appendix

4.1 Test Photography

4.2 EUT Photography

This report shall not be reproduced except in full, without the written approval of SEC EMC Testing laboratory.

1. General Information

1.1 Basic Information related Product

Applicant	Samsung Electronics Co., Ltd.
Model name	DC60CPS
Applicant Address	416 Maetan 3-Dong, Yeongtong-Gu, Suwon-Si, Gyeonggi-Do, Korea, 443-742
Contact Person	Kyeong Dong, Kim
Kind of product	Laser Printer
Variant list	CLP-600 : Basic Model CLP-600N: with network card
Manufacturer	Samsung Electronics Co., Ltd.
New / Alternative / Permissive change Information	New

1.2 Detail Information related Product

Specification

Item	Specification	Remark
Printing Speed	Black and Color : Up to 20ppm in A4(21ppm in Letter)	-
Printing Resolution	Up to 2400 x 600 dpi	-
Memory	32MB (not expandable)	-
Interface	CLP-600 : USB 2.0 CLP-600N : USB 2.0, Ethernet 10/100 Base Tx Option : CLP-600N Only(Ethernet 10/100 Base Tx, 802.11 a/b/g Wireless LAN(internal))	-
Power Rating	AC 100~127V(USA, Canada), 10A	
Power Consumption	550W average during operation / Less than 35W in power Save mode	-
External Dimensions	465mm(W) X 465mm(D) X 445mm(H)	-

Operating Frequency

Video(31.005MHz), SDRAM(75MHz), USB Clk(12MHz), N/W clock:25MHz, Wireless LAN(2.4GHz), SDRAM clock of network Card(133MHz)

This report shall not be reproduced except in full, without the written approval of SEC EMC Testing laboratory.

1.3 Operating Mode and Condition

The system was configured for testing in typical fashion use. Cable were attached to each of the available I/O port. Where applicable, peripherals were attached to the I/O cables.
This EUT have Wireless Printing server function so Host PC link to EUT and transfer print file formation "H" character document continuously.

The EUT is supporting the USB, LAN and Wireless LAN printing mode.
In each test mode, finally we found worst case emission that is above configuration with the worst case components(in the above table). So, the data of the maximum EUT operation, USB printing was reported.

- Power Input
Voltage : AC 110V
Frequency : 60Hz

1.4 Test System Details

Refer to 1.2

1.5 Equipment Modifications

No equipment modifications were required.

This report shall not be reproduced except in full, without the written approval of SEC EMC Testing laboratory.

1.6 Test Procedure

1.6.1 Conducted Emission

EUT was placed on a platform nominal size, 1m by 1.5m, raised 80cm above the conducting ground plane. The rear of tabletop was located 40cm to the vertical conducting ground plane.
The rear of EUT, including peripherals was aligned and flush with rear of tabletop.
All other surfaces of tabletop was at least 80cm from any other grounded conducting surface. I/O cables and AC cables that were connected to the peripherals were bundled in center. They were folded back and forth forming a bindle 30cm to 40cm long and were handed at a 40cm height to the ground plane.
Each EUT current-carrying power lead, except the ground(safety)lead, were individually connected through a LISN to the input power source.
All unused 50 ohm connectors of the LISN were resistively terminated in 50 ohm when not connected to the measuring equipment.

Frequency Band [MHz]	Instrument	Detector	Resolution Bandwidth	Video Bandwidth
0.15 to 30	EMI Receiver	Quasi-Peak	9kHz	-
		Average	9kHz	-

1.6.2 Radiated Emission

EUT was placed on a platform of nominal size, 1m by 1.5m, raised 80cm above the conducting ground plane.
The rear of EUT, including peripherals was aligned and flush with rear of tabletop.
I/O cables that were connected to the peripherals were bundle in center.
They were folded back and forth forming a bundle 30cm to 40cm long and were hanged 40cm height to the ground plane.

Test was made with the antenna positioned in both the horizontal and vertical planes of polarization. The measurement antenna was varied in height above the conducting ground plane and the run table azimuth was varied to obtain the maximum signal strength

This report shall not be reproduced except in full, without the written approval of SEC EMC Testing laboratory.

The system configuration, clock speed, mode of operation or video resolution, turntable azimuth with respect to the antenna were noted for each frequency found.
The spectrum was scanned from 30 to 1000 MHz using biconiLog antenna.

Also, the EMI RECEIVER was scanned from 1000 to 2000MHz using linearly polarization Double ridge horn antennas were used. The explanation of measuring instrument setup when Respective function is used in any frequency band is as following;

Frequency Band [MHz]	Instrument	Detector	Resolution Bandwidth	Video Bandwidth
30 to 1000	EMI Receiver	Quasi-Peak	120kHz	-
Above 1000	EMI Receiver	Peak	1MHz	1MHz

This report shall not be reproduced except in full, without the written approval of SEC EMC Testing laboratory.

1.7 Test Configuration

Used EUT and Peripherals

Mark	Item	Model No.	Serial No.	Manufacturer	FCC ID/DoC
A	Laser Printer	DC60CPS	-	Samsung	A3LDC60CPS
B	Notebook PC	Blade I	-	Dell	DoC
C	AC Adapter	PA-1500-05D	00R334-48010-286-00E6	Lite-On	For Notebook PC
D	PC Camera	DCR-PC110	1148606	SONY	DoC
E	Serial Mouse	37964	0988577	Microsoft	DoC
F	USB Mouse	M-UR69	LNA24917708	Logitech	DoC

Used Cable Description

No	Connect Cable	Length [m]	Shielded [Y/N]	Remark
1	Power	1.8	No	For E.U.T
2	LAN (RJ45)	3.5	No	-
3	Wireless LAN	-	-	-
4	USB	1.8	Yes	-
5	1394	1.8	Yes	-
6	Serial	2.0	No	-
7	USB	1.8	Yes	-
8	Power	1.8	No	For Notebook PC

This report shall not be reproduced except in full, without the written approval of SEC EMC Testing laboratory.

Block Diagram

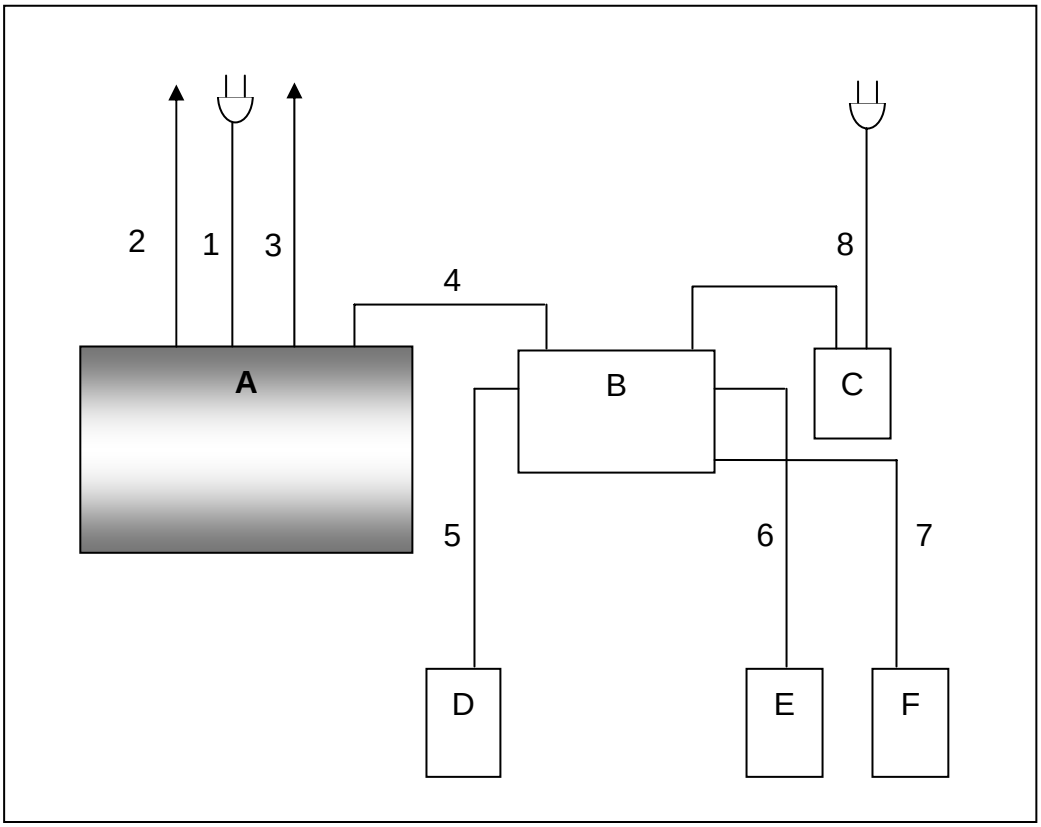

This report shall not be reproduced except in full, without the written approval of SEC EMC Testing laboratory.

1.8 Applied Standards

List

Product or Generic Standards	Basic Standards
FCC Part15	ANSI C63.4 : 2003

1.9 Test Facility

General Information

The sites are constructed in conformance with the requirements of ANSI C63.4 and CISPR 22, 16-1, 16-2.

This EMC Testing Lab. is accredited by Korea Laboratory Accreditation Scheme (KOLAS) which signed the International Laboratory Accreditation Cooperation (ILAC) Mutual Recognition Arrangement (MRA) for the above test item(s) and test method(s).

This Lab. is operated as testing laboratory in accordance with the requirements of ISO/IEC 17025:1998.

Accreditation and Listing

Uncertainty (According to NAMAS Pub.NIS81)

Conducted Emission : ±1.9dB

Radiated Emission Bi-Log Antenna : ±5.1dB

This report shall not be reproduced except in full, without the written approval of SEC EMC Testing laboratory.

2. Summary of Test Results

Result : PASS

The equipment under test(EUT) has been found to comply with the applied standards.

Section of the Product Standard		Applied Standard	Result
Electromagnetic Emission Test			
3.1	Conducted Emission	FCC Part 15 Sub. B	Complied
3.2	Radiated Emission	FCC Part 15 Sub. B	Complied

This report shall not be reproduced except in full, without the written approval of SEC EMC Testing laboratory.

3. Description of Individual Tests

3.1 Conducted Emission

Test Information	
Test Engineer	Kyeong Dong, Kim
Test Date	August 5, 2005
Climate Condition	Ambient Temperature : 23.2℃ Relative Humidity : 47% Atmospheric Pressure 1013mbar
Test Place	Shielded Room #2

Test Equipments

Equipment	Model Name	Manufacturer	Serial No.	Calibration	
				Next Date	Interval
EMI TEST RECEIVER	ESCS30	R&S	830986/004	2006-02-17	12
LISN	3810/2NM	EMCO	2251	2006-02-01	12
LISN	ESH3-Z5	R&S	831887/004	2005-08-31	12

Measurement Results	**Passed** The Measured emissions of the EUT have found to be below the specified limits.

This report shall not be reproduced except in full, without the written approval of SEC EMC Testing laboratory.

Test Data & Graph

The Initial step in collecting conducted data was to perform a peak and average scan over the measurement range using a receiver

The find data represents worst-case emissions.

* QP : Quasi-peak, AV: Average

* Result = Meter Reading(QP or AV) + Total Loss(LISN Insertion loss + Cable loss)

* Margin = Limit – Result

1. TEST DATA

- Quasi Peak Table

MEASUREMENT RESULT: "CLP600NFCC_fin QP"

Frequency	Level	Transd	Limit	Margin	Line	PE
MHz	dBµV	dB	dBµV	dB		
0.382	45.3	0.2	58.3	13.0	N	GND
0.475	42.1	0.1	56.4	14.4	N	GND
0.663	41.2	0.1	56.0	14.8	N	GND
0.753	19.7	0.1	56.0	36.3	N	GND
0.937	42.3	0.1	56.0	13.7	N	GND
1.100	43.2	0.1	56.0	12.8	N	GND
1.600	43.2	0.1	56.0	12.8	N	GND
1.810	44.3	0.2	56.0	11.7	N	GND
2.149	41.6	0.2	56.0	14.4	N	GND
2.480	45.5	0.2	56.0	10.5	N	GND
2.993	44.4	0.2	56.0	11.6	N	GND
3.084	46.1	0.2	56.0	9.9	L1	GND

This report shall not be reproduced except in full, without the written approval of SEC EMC Testing laboratory.

- Average Table

MEASUREMENT RESULT: "CLP600NFCC_fin AV"

Frequency	Level	Transd	Limit	Margin	Line	PE
MHz	dBµV	dB	dBµV	dB		
0.382	43.5	0.2	48.3	4.8	L1	GND
2.377	40.8	0.2	46.0	5.2	L1	GND
2.429	28.2	0.2	46.0	17.8	N	GND
2.501	29.7	0.2	46.0	16.3	N	GND
2.507	30.3	0.2	46.0	15.7	N	GND
2.935	29.4	0.2	46.0	16.6	L1	GND
2.959	34.4	0.2	46.0	11.6	L1	GND
3.021	34.0	0.2	46.0	12.0	L1	GND
3.083	41.6	0.2	46.0	4.4	N	GND
3.117	37.0	0.2	46.0	9.0	N	GND
3.159	38.9	0.2	46.0	7.1	N	GND

This report shall not be reproduced except in full, without the written approval of SEC EMC Testing laboratory.

2. Graph

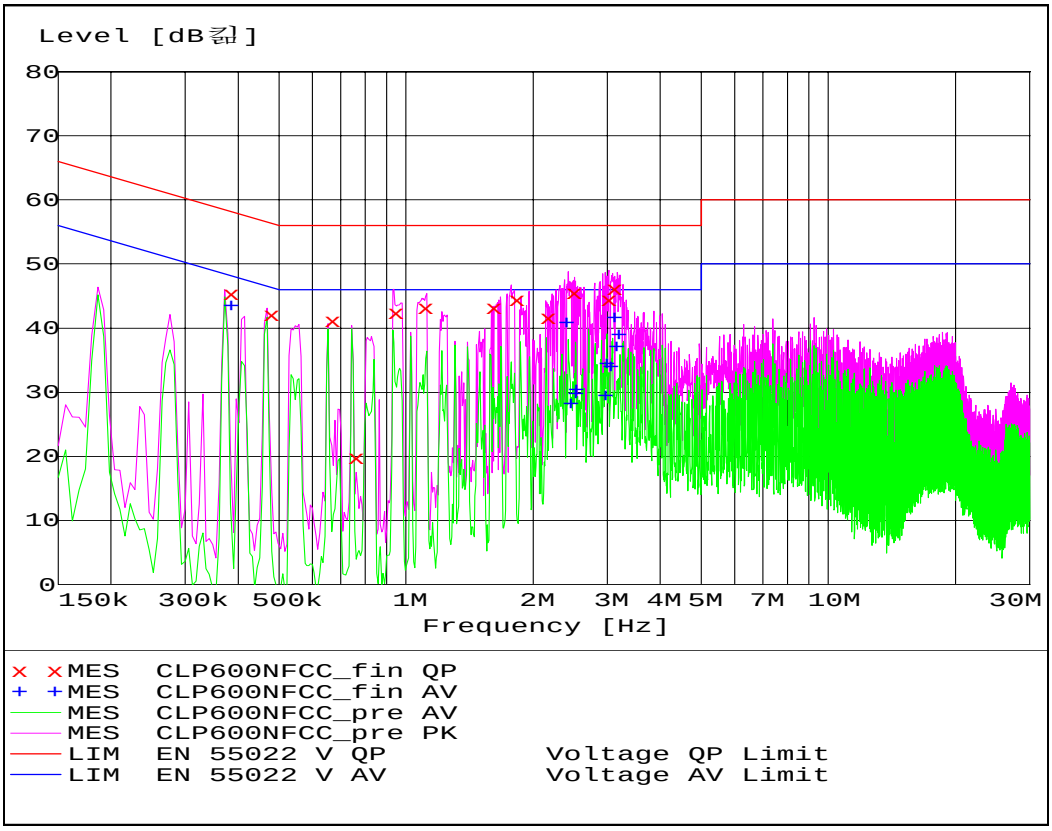
Level [dB㎶]
80
70
60
50
40
30
20
10
0
150k
300k
500k
1M
2M
3M
4M
5M
7M
10M
30M
Frequency [Hz]
× ×MES CLP600NFCC_fin QP
+ +MES CLP600NFCC_fin AV
MES CLP600NFCC_pre AV
MES CLP600NFCC_pre PK
LIM EN 55022 V QP Voltage QP Limit
LIM EN 55022 V AV Voltage AV Limit

3.2 Radiated Emission

Test Information	
Test Engineer	Kyeong Dong, Kim
Test Date	August 05, 2005
Climate Condition	Ambient Temperature : 21.3℃ Relative Humidity : 49% Atmospheric Pressure 1012mbar
Test Place	10m Semi Anechoic Chamber

Test Equipments

Equipment	Model Name	Manufacturer	Serial No.	Calibration	
				Next Date	Interval
Turn Table	DT430	HD	430/691/01	N/A	N/A
Antenna Mast	MA240	HD	240/678 BJ:01	N/A	N/A
Controller	HD100	HD	100/723	N/A	N/A
Preamplifier	CPA9232	Schaffner	1054	2006-02-07	12
BILOG Antenna	CBL6112B	Schaffner	2804	2005-11-09	12
Test Receiver	ESI26	R&S	100147	2005-10-04	12

Measurement Results	**Passed** The measured emissions of the EUT have found to be below the specified limits.

This report shall not be reproduced except in full, without the written approval of SEC EMC Testing laboratory.

Test Data & Graph

The initial step in collecting radiated data was to perform a peak scan over the measurement range using a receiver. All modes of operation were investigated and the worst-case emissions are reported. The minimum margin to the limit is as follows:
All other emissions are non-significant.

* Receiving Antenna Mode : Horizontal, Vertical
* Test distance : 10m (Semi-Anechoic Chamber)
* Result = Meter Reading + Total Loss(Antenna factor + Cable loss - Amp. Gain)
* CF = Antenna Factor + Cable Loss - Amp. Gain
* Margin = Limit – Result

1. Data & Graph (30~1000MHz)

Samsung Electronics Co., Ltd
IT Center

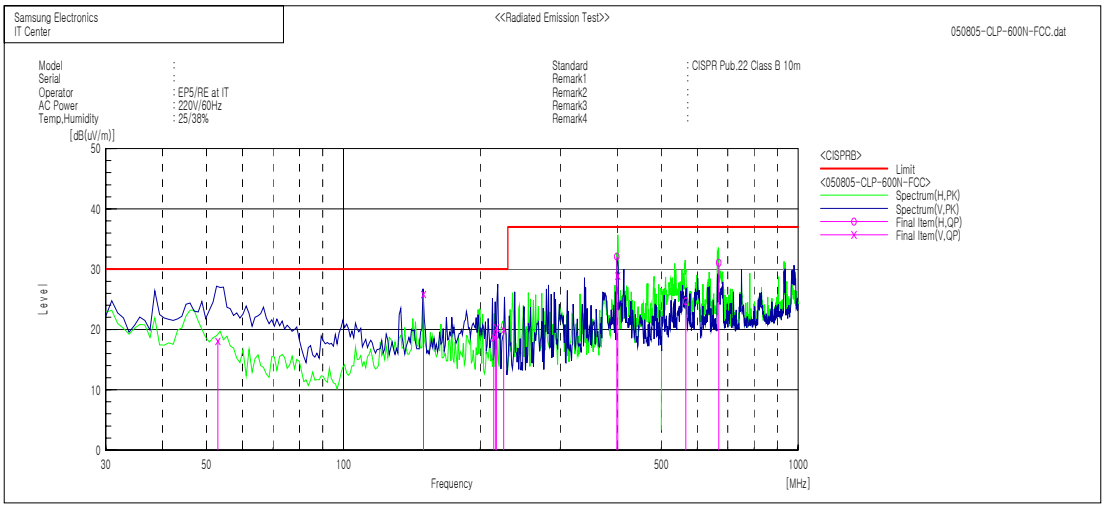

Final Result

No.	Frequency [MHz]	(P)	Reading QP [dB(uV)]	c.f [dB(1/m)]	Result QP [dB(uV/m)]	Limit [dB(uV/m)]	Margin QP [dB]	Height [cm]	Angle [deg]	Remark
1	52.911	V	31.1	-13.1	18.0	30.0	12.0	257.0	56.0	
2	150.010	V	34.7	-8.9	25.8	30.0	4.2	107.0	74.0	
3	214.181	V	28.4	-9.8	18.6	30.0	11.4	104.0	52.0	
4	216.074	V	28.9	-9.8	19.1	30.0	10.9	100.0	98.0	
5	217.129	V	30.1	-9.8	20.3	30.0	9.7	133.0	92.0	
6	225.022	V	29.4	-9.5	19.9	30.0	10.1	108.0	222.0	
7	398.959	H	34.2	-2.1	32.1	37.0	4.9	280.0	350.0	
8	401.126	V	31.0	-2.1	28.9	37.0	8.1	104.0	281.0	
9	566.037	H	21.7	3.0	24.7	37.0	12.3	252.0	305.0	
10	668.352	H	28.1	3.0	31.1	37.0	5.9	105.0	251.0	

This report shall not be reproduced except in full, without the written approval of SEC EMC Testing laboratory.

2. Data (1000MHz~2000MHz)

Freq. [㎒]	Reading [dBuV/m]	c.f. [dB]	Result [dBuV/m]	Limit [dBuV/m]	Margin [dB]	Height [cm]	Azimuth [°]	Pol. [H/V]
1487	66.4	-11.5	54.9	74.0	19.1	100	30	H
1778	64.9	-10.9	54.0	74.0	20.0	100	300	H
1898	65.3	-9.6	55.7	74.0	18.3	100	210	H

* Measurement detector function and bandwidth
  - Detector function : peak
  - Bandwidth : 1MHz
* Receiving Antenna Mode : Horizontal, Vertical
* Test distance : 3m (Semi-Anechoic Chamber)
* Result = Meter Reading + Total Loss(Antenna factor + Cable loss-Amp. Gain)
* Margin = Limit – Result

This report shall not be reproduced except in full, without the written approval of SEC EMC Testing laboratory.

4. Appendix

4.1 Test Photography

Picture 1. Conducted Emission (Front)

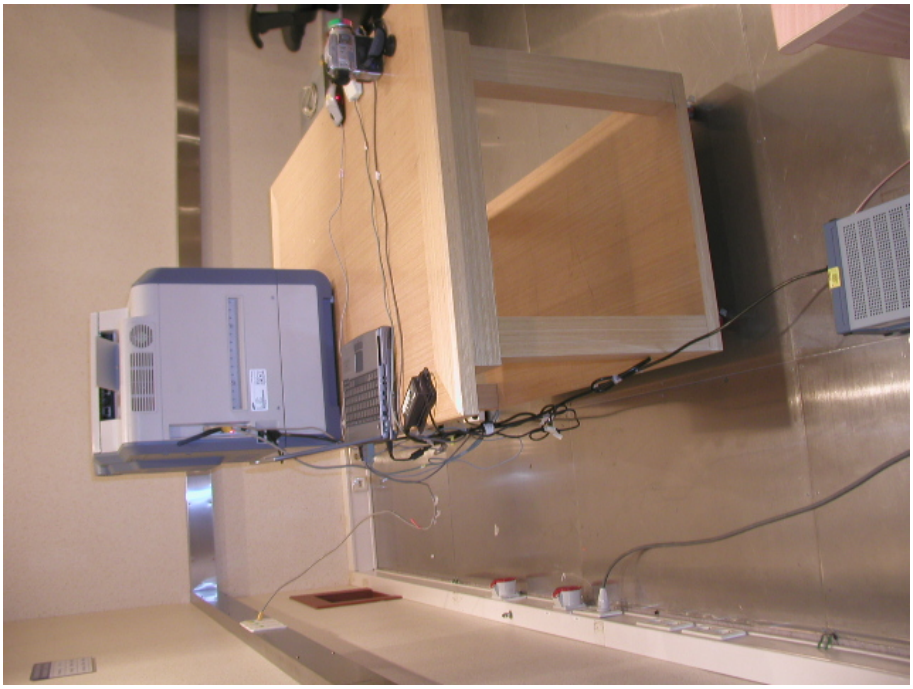

Picture 2. Conducted Emission (Rear)

This report shall not be reproduced except in full, without the written approval of SEC EMC Testing laboratory.

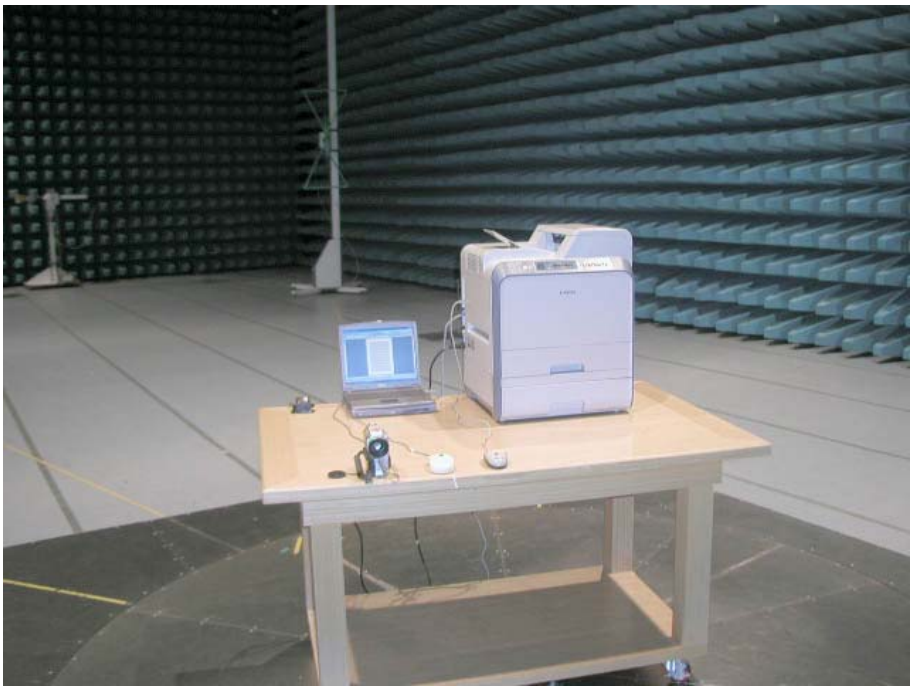

Picture 3. Radiated Emission (Front)

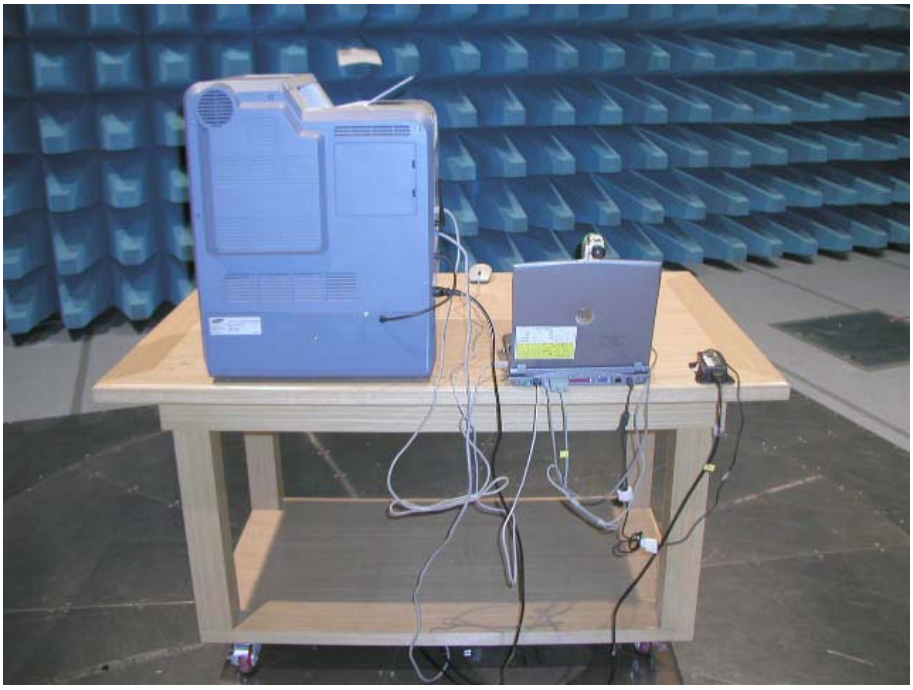

Picture 4. Radiated Emission (Rear)

This report shall not be reproduced except in full, without the written approval of SEC EMC Testing laboratory.

4.2 EUT Photography

Picture 5. EUT (Front)

Picture 6. EUT (Rear)

This report shall not be reproduced except in full, without the written approval of SEC EMC Testing laboratory.

SAMSUNG

Samsung Electronics Co., Ltd.
259, Gongdan-Dong, Gumi-City,
Kyung-Buk,730-030, Korea
Place: M259

ENERGY STAR

Serial No.:

Model: CLP-600N
Type No.: DC60CPS
Volts: AC 110-127V
Hertz: 50/60Hz
Amps: 9A
Manufactured: MARCH 2005

c UL us LISTED 51Y7 E149091 I.T.E

FCC ID: A3LDC60CPS (Printer)
FCC ID: A3LSWL-5300M (WLAN)
This device complies with part 15 of the FCC Rules.
Operation is subject to the following two conditions:
i) This device may not cause harmful interference, and
ii) This device must accept any interference received,
including interference that may cause undesired operation.
This Class B digital apparatus meets all requirements of the
Canadian interference-Causing Equipment Regulations.
Cet appareil numérique de la class B respecte toutes les exigences du Règlement sur le matériel brouilleur du Canada.
Canadian Certification Number(RSS-210): 649E-SWL5300M (WLAN)
This Class B digital apparatus complies with
Canadian ICES-003
Cet appareil numérique de la classe B est conforme à la morme NMB-003 du Canada.
This product complies with 21 CFR Chapter 1, subchapter J.
MADE IN KOREA REV.00

SAMSUNG

Samsung Electronics Co., Ltd.
259, Gongdan-Dong, Gumi-City,
Kyung-Buk,730-030, Korea
Place: M259

ENERGY STAR

Serial No.:

Model: CLP-600
Type No.: DC60CPS
Volts: AC 110-127V
Hertz: 50/60Hz
Amps: 9A
Manufactured: MARCH 2005

c UL us LISTED 51Y7 E149091 I.T.E

FCC ID: A3LDC60CPS (Printer)
This device complies with part 15 of the FCC Rules.
Operation is subject to the following two conditions:
i) This device may not cause harmful interference, and
ii) This device must accept any interference received,
including interference that may cause undesired operation.
This Class B digital apparatus meets all requirements of the
Canadian interference-Causing Equipment Regulations.
Cet appareil numérique de la class B respecte toutes les exigences du Règlement sur le matériel brouilleur du Canada.
This Class B digital apparatus complies with
Canadian ICES-003
Cet appareil numérique de la classe B est conforme à la morme NMB-003 du Canada.
This product complies with 21 CFR Chapter 1, subchapter J.
MADE IN KOREA REV.00

Picture 7. Label location

Picture 8. Label location