SAMSUNG

COLOR LASER PRINTER User's Guide

CLP-600 Series

For UK customers:
To reorder your consumables
Call 0800 3164060
For Technical Assistance
Call 0870 2420303

About the User's Guide

This User's Guide provides information you need for setting up your printer. It also provides all of the detailed instructions for using your printer and information for maintaining and troubleshooting the printer.

The Software User's Guide, which is the second section of this guide, provides information you need for installing the supplied software and using its features.

This manual is provided for information purposes only. All information included herein is subject to change without notice. Samsung Electronics is not responsible for any changes, direct or indirect, arising from or related to use of this manual.
© 2005 Samsung Electronics Co., Ltd. All rights reserved.

- CLP-600 and CLP-600N are model names of Samsung Electronics Co., Ltd.
- SAMSUNG and Samsung logo are trademarks of Samsung Electronics co., Ltd.
- Apple, TrueType, Laser Writer, and Macintosh are Trademarks of Apple Computer, Inc.
- Microsoft, Windows, Windows 98SE, Windows Me, Windows 2000, Windows 2003, Windows NT 4.0, and Windows XP are registered trademarks of Microsoft Corporation.
- All other brand or product names are trademarks of their respective companies or organizations.

CONTENTS

1. Introduction

Special Features 1.1
Printer Components 1.2
Front View 1.2
Right Side View 1.2

2. Setting Up Your Printer

Unpacking 2.1
Installing the Toner Cartridges 2.2
Loading Paper 2.4
Changing the Size of the Paper in the Tray 2.5
Connecting a Printer Cable 2.6
For Local Printing 2.6
For Network Printing (CLP-600N only) 2.7
Turning the Printer On 2.7
Printing a Demo Page 2.7
Changing the Display Language (CLP-600N Only) 2.8
Installing the Printer Software 2.8
System Requirements 2.8
Printer Driver Features 2.9

3. Using the Control Panel

Understanding the Control Panel 3.1
Display (CLP-600N Only) 3.1
Buttons 3.2
Using Control Panel Menus (CLP-600N Only) 3.2
Accessing Control Panel Menus 3.2
Overview of Control Panel Menus 3.3
Information Menu 3.3
Color Menu 3.3
Printer Menu 3.4
Setup Menu 3.4
Network Menu 3.5

4. Using Print Materials

Choosing Paper and Other Materials 4.1
Sizes and Capacities 4.1
Guidelines for Paper and Special Materials 4.1
Loading Paper 4.2
Using Tray 1 ..... 4.2
Using the Optional Tray 4.2
Using the Multi-purpose Tray 4.2
Using the Manual Feed 4.3
Printing on Special Print Materials 4.4
Printing on Envelopes 4.4
Printing on Labels 4.5
Printing on Preprinted Paper 4.5
Printing on Card Stock or Custom-sized Materials 4.6

5. Basic Printing

Printing a Document 5.1
Canceling a Print Job 5.1

6. Maintaining Your Printer

Printing a Configuration Page (CLP-600N Only) 6.1
Replacing Supplies 6.2
Managing Toner Cartridges 6.2
Toner Cartridge Storage 6.2
Toner Cartridge Life Expectancy 6.2
Redistributing Toner 6.2
Replacing Toner Cartridges 6.4
Replacing the Paper Transfer Belt 6.5
Replacing the Fuser Unit 6.7
Cleaning the Printer 6.8
Cleaning the Outside of the Printer 6.8
Cleaning the Inside of the Printer 6.8
Managing the Printer from the Website (CLP-600N Only) 6.9
Setting Up E-mail Notification 6.9
Setting the Contact Information Tab 6.10

7. Solving Problems

Troubleshooting Checklist 7.1
Solving General Printing Problems 7.2
Clearing Paper Jams 7.4
In the Paper Feed Area 7.4
In the Multi-purpose Tray 7.5
Inside the Printer 7.6
In the Paper Exit Area 7.7
In the Optional Tray2 ..... 7.8
Tips for Avoiding Paper Jams 7.11
Solving Print Quality Problems 7.12
Understanding Display Messages 7.14
Common Windows Problems 7.16
Common Macintosh Problems 7.16
Common Linux Problems 7.16

8. Using Your Printer on a Network (CLP-600N only)

About Sharing the Printer on a Network 8.1
Setting Up a Network-Connected Printer 8.1
Configuring Network Parameters on the Control Panel 8.1

9. Installing Printer Options

Precautions When Installing Printer Options 9.1
Installing an Optional Paper Tray 9.1
Installing a Network Interface Card (CLP-600N Only) 9.2

10. Specifications

Printer Specifications 10.1
Paper Specifications 10.1
Overview 10.1
Supported Sizes of Paper 10.2
Guidelines for Using Paper 10.2
Paper Specifications 10.3
Paper Output Capacity 10.3
Paper Input Capacity 10.3
Printer and Paper Storage Environment 10.3
Envelopes 10.4
Labels 10.4

Important Precautions and Safety Information

When using this machine, these basic safety precautions should always be followed to reduce risk of fire, electric shock, and injury to people:

1 Read and understand all instructions.

2 Use common sense whenever operating electrical appliances.

3 Follow all warnings and instructions marked on the machine and in the literature accompanying the machine.

4 If an operating instruction appears to conflict with safety information, heed the safety information. You may have misunderstood the operating instruction. If you cannot resolve the conflict, contact your sales or service representative for assistance.

5 Unplug the machine from the AC wall socket before cleaning. Do not use liquid or aerosol cleaners. Use only a damp cloth for cleaning.

6 Do not place the machine on an unstable cart, stand or table. It may fall, causing serious damage.

7 Your machine should never be placed on, near or over a radiator, heater, air conditioner or ventilation duct.

8 Do not allow anything to rest on the power cable. Do not locate your machine where the cords will be abused by persons walking on them.

9 Do not overload wall outlets and extension cords. This can diminish performance, and may result in the risk of fire or electric shock.

10 Do not allow pets to chew on the AC power or PC interface cords.

11 Never push objects of any kind into the machine through case or cabinet openings. They may touch dangerous voltage points, creating a risk of fire or shock. Never spill liquid of any kind onto or into the machine.

12 To reduce the risk of electric shock, do not disassemble the machine. Take it to a qualified service technician when repair work is required. Opening or removing covers may expose you to dangerous voltages or other risks. Incorrect reassembly could cause electric shock when the unit is subsequently used.

13 Unplug the machine from the PC and AC wall outlet, and refer servicing to qualified service personnel under the following conditions:

- When any part of the power cord, plug, or connecting cable is damaged or frayed.
- If liquid has been spilled into the machine.
- If the machine has been exposed to rain or water.
- If the machine does not operate properly after instructions have been followed.
- If the machine has been dropped, or the cabinet appears damaged.
- If the machine exhibits a sudden and distinct change in performance.

14 Adjust only those controls covered by the operating instructions. Improper adjustment of other controls may result in damage, and may require extensive work by a qualified service technician to restore the machine to normal operation.

15 Avoid using this machine during a lightning storm. There may be a remote risk of electric shock from lightning. If possible, unplug the AC power for the duration of the lightning storm.

16 If you continuously print multiple pages, the surface of the output tray may become hot. Be careful not to touch the surface, and keep children away from the surface.

17 SAVE THESE INSTRUCTIONS.

Environmental and Safety Consideration

Laser Safety Statement

The printer is certified in the U.S. to conform to the requirements of DHHS 21 CFR, chapter 1 Subchapter J for Class I(1) laser products, and elsewhere, is certified as a Class I laser product conforming to the requirements of IEC 825.

Class I laser products are not considered to be hazardous. The laser system and printer are designed so there is never any human access to laser radiation above a Class I level during normal operation, user maintenance, or prescribed service condition.

WARNING
Never operate or service the printer with the protective cover removed from Laser/Scanner assembly. The reflected beam, although invisible, can damage your eyes.
When using this product, these basic safety precautions should always be followed to reduce risk of fire, electric shock, and injury to persons:

CAUTION - CLASS 3B LASER RADIATION WHEN OPEN AVOID EXPOSURE TO THE BEAM.

DANGER - LASER RADIATION AVOID DIRECT EXPOSURE TO BEAM.

DANGER - RADIATIONS INVISIBLES DU LASER EN CAS D'OUVERTURE. EVITER TOUTE EXPOSITION DIRECTE AU FAISCEAU.

VORSICHT - UNSICHTBARE LASERSTRAHLUNG, WENN ABDECKUNG GEÖFFNET. NICHT DEM STRAHL AUSSETZEN.

ATTENZIONE - RADIAZIONE LASER INVISIBILE IN CASO DI APERTURA. EVITARE L'ESPOSIZIONE AL FASCIO.

PRECAUCIÓN - RADIACIÓN LASER INVISIBLE CUANDO SE ABRE. EVITAR EXPONERSE AL RAYO.

PERIGO - RADIAÇÃO LASER INVISÍVEL AO ABRIR. EVITE EXPOSIÇÃO DIRECTA AO FEIXE.

GEVAAR - ONZICHTBARE LASERSTRALEN BIJ GEOPENDE KLEP. DEZE KLEP NIET OPENEN.

ADVARSEL - USYNLIG LASERSTRÅLNING VED ÅBNING. UNDGÅ UDSAETTELSE FOR STRÅLNING.

ADVARSEL. - USYNLIG LASERSTRÅLNING NÅR DEKSEL ÅPNES. UNNGÅ EKSPONERING FOR STRÅLEN.

VARNING - OSYNLIG LASERSTRÅLNING NÄR DENNA DEL ÄR ÖPPEN. STRÅLEN ÄR FARLIG.

VAROITUS - NÄKYMÄTÖNTÄ LASERSÄTEILYÄ AVATTAESSA. VARO SUORAA ALTISTUMISTA SÄTEELLE.

注 意 - 严禁揭开此盖, 以免激光泄露灼伤

주 의 - 이 덮개를 열면 레이저광에 노출될 수 있으므로 주의하십시오.

Ozone Safety

During normal operation, this machine produces ozone. The ozone produced does not present a hazard to the operator. However, it is advisable that the machine be operated in a well ventilated area.

If you need additional information about ozone, please contact your nearest Samsung dealer.

Power Saver

This printer contains advanced energy conservation technology that reduces power consumption when it is not in active use.

When the printer does not receive data for an extended period of time, power consumption is automatically lowered.

The energy star emblem does not represent EPA endorsement of any product or service.

Recycling

Please recycle or dispose of packaging materials for this product in an environmentally responsible manner.

Correct Disposal of This Product (Waste Electrical & Electronic Equipment)

(Applicable in the European Union and other European countries with separate collection systems)

This marking shown on the product or its literature, indicates that it should not be disposed with other household wastes at the end of its working life. To prevent possible harm to the environment or human health from uncontrolled waste disposal, please separate this from other types of wastes and recycle it responsibly to promote the sustainable reuse of material resources.

Household users should contact either the retailer where they purchased this product, or their local government office, for details of where and how they can take this item for environmentally safe recycling.

Business users should contact their supplier and check the terms and conditions of the purchase contract. This product should not be mixed with other commercial wastes for disposal.

Radio Frequency Emissions

FCC Regulations

This device complies with Part 15 of the FCC Rules. Operation is subject to the following two conditions:

- This device may not cause harmful interference, and
- This device must accept any interference received, including interference that may cause undesired operation.

This device has been tested and found to comply with the limits for a Class B digital device, pursuant to Part 15 of the FCC rules. These limits are designed to provide reasonable protection against harmful interference in a residential installation. This equipment generates, uses and can radiate radio frequency energy and, if not installed and used in accordance with the instructions, may cause harmful interference to radio communications. However, there is no guarantee that interference will not occur in a particular installation. If this equipment does cause harmful interference to radio or television reception, which can be determined by turning the equipment off and on, the user is encouraged to try to correct the interference by one or more of the following measures:

1. Reorient or relocate the receiving antenna.
2. Increase the separation between the equipment and receiver.
3. Connect the equipment into an outlet on a circuit different from that to which the receiver is connected.
4. Consult the dealer or an experienced radio/TV technician for help.

CAUTION: Changes or modifications not expressly approved by the manufacturer responsible for compliance could void the user's authority to operate the equipment.

Canadian Radio Interference Regulations

This digital apparatus does not exceed the Class B limits for radio noise emissions from digital apparatus as set out in the interference-causing equipment standard entitled "Digital Apparatus", ICES-003 of the Industry and Science Canada.

Cet appareil numérique respecte les limites de bruits radioélectriques applicables aux appareils numériques de Classe B prescrites dans la norme sur le matériel brouilleur: "Appareils Numériques", ICES-003 édictée par l'Industrie et Sciences Canada.

United States of America

Federal Communications Commission (FCC)

Intentional emitter per FCC Part 15

Low power, Radio LAN type devices (radio frequency (RF) wireless communication devices), operating in the 2.4 GHz Band, may be present (embedded) in your printer system. This section is only applicable if these devices are present. Refer to the system label to verify the presence of wireless devices.

Wireless devices that may be in your system are only qualified for use in the United States of America if an FCC ID number is on the system label.

The FCC has set a general guideline of 20 cm (8 inches) separation between the device and the body, for use of a wireless device near the body (this does not include extremities). This device should be used more than 20 cm (8 inches) from the body when wireless devices are on. The power output of the wireless device (or devices), which may be embedded in your printer, is well below the RF exposure limits as set by the FCC.

This transmitter must not be collocated or operation in conjunction with any other antenna or transmitter.

Operation of this device is subject to the following two conditions:(1) This device may not cause harmful interference, and(2) this device must accept any interference received, including interference that may cause undesired operation of the device.

Wireless devices are not user serviceable. Do not modify them in any way. Modification to a wireless device will void the authorization to use it. Contact manufacturer for service.

FCC Statement for Wireless LAN use:

"While installing and operating this transmitter and antenna combination the radio frequency exposure limit of 1mW/cm2 may be exceeded at distances close to the antenna installed. Therefore, the user must maintain a minimum distance of 20cm from the antenna at all times. This device can not be colocated with another transmitter and transmitting antenna."

Declaration of Conformity (European Countries)

Approvals and Certifications

The CE marking applied to this product symbolises Samsung Electronics Co., Ltd. Declaration of Conformity with the following applicable 93/68/EEC Directives of the European Union as of the dates indicated:

January 1, 1995: Council Directive 73/23/EEC Approximation of the laws of the member states related to low voltage equipment.

January 1, 1996: Council Directive 89/336/EEC (92/31/EEC), approximation of the laws of the Member States related to electromagnetic compatibility.

March 9, 1999: Council Directive 1999/5/EC on radio equipment and telecommunications terminal equipment and the mutual recognition of their conformity.

A full declaration, defining the relevant Directives and referenced standards can be obtained from your Samsung Electronics Co., Ltd. representative.

EC Certification

Certification to 1999/5/EC Radio Equipment & Telecommunications Terminal Equipment Directive (FAX)

This Samsung product has been self-certified by Samsung for pan-European single terminal connection to the analogue public switched telephone network (PSTN) in accordance with Directive 1999/5/EC. The product has been designed to work with the national PSTNs and compatible PBXs of the European countries:

In the event of problems, you should contact the Euro QA Lab of Samsung Electronics Co., Ltd. in the first instance.

The product has been tested against TBR21 and/or TBR 38. To assist in the use and application of terminal equipment which complies with this standard, the European Telecommunication Standards Institute (ETSI) has issued an advisory document (EG 201 121) which contains notes and additional requirements to ensure network compatibility of TBR21 terminals. The product has been designed against, and is fully compliant with, all of the relevant advisory notes contained in this document.

European Radio Approval Information (for products fitted with EU-approved radio devices)

This Product is a printer; low power, Radio LAN type devices (radio frequency (RF) wireless communication devices), operating in the 2.4 GHz band, may be present (embedded) in your printer system which is intended for home or office use. This section is only applicable if these devices are present. Refer to the system label to verify the presence of wireless devices.

Wireless devices that may be in your system are only qualified for use in the European Union or associated areas if a CE mark with CE a Notified Body Registration Number and the Alert Symbol is on the system label.

The power output of the wireless device or devices that may be embedded in you printer is well below the RF exposure limits as set by the European Commission through the R&TTE directive.

European States qualified under wireless approvals:

EU	Austria, Belgium, Denmark, Finland, France (with frequency restrictions), Germany, Greece, Ireland, Italy, Luxembourg, The Netherlands, Portugal, Spain, Sweden and the United
Accept EU	Iceland, Liechtenstein, Norway and Switzerland

European States with restrictions on use:

EU	In France, the frequency range is restricted to 2446.5-2483.5 MHz for devices above 10 mW transmitting power such as wireless
Accept EU	No limitations at this time.

Regulatory Compliance Statements

Wireless Guidance

Low power, Radio LAN type devices (radio frequency (RF) wireless communication devices), operating in the 2.4 GHz Band, may be present (embedded) in your printer system. The following section is a general overview of considerations while operating a wireless device.

Additional limitations, cautions, and concerns for specific countries are listed in the specific country sections (or country group sections). The wireless devices in your system are only qualified for use in the countries identified by the Radio Approval Marks on the system rating label. If the country you will be using the wireless device in, is not listed, please contact your local Radio Approval agency for requirements. Wireless devices are closely regulated and use may not be allowed.

The power output of the wireless device or devices that may be embedded in your printer is well below the RF exposure limits as known at this time. Because the wireless devices (which may be embedded into your printer) emit less energy than is allowed in radio frequency safety standards and recommendations, manufacturer believes these devices are safe for use. Regardless of the power levels, care should be taken to minimize human contact during normal operation.

As a general guideline, a separation of 20 cm (8 inches) between the wireless device and the body, for use of a wireless device near the body (this does not include extremities) is typical. This device should be used more than 20 cm (8 inches) from the body when wireless devices are on and transmitting.

This transmitter must not be collocated or operation in conjunction with any other antenna or transmitter.

Some circumstances require restrictions on wireless devices. Examples of common restrictions are listed below:

Radio frequency wireless communication can interfere with equipment on commercial aircraft. Current aviation regulations require wireless devices to be turned off while traveling in an airplane. 802.11B (also known as wireless Ethernet) and Bluetooth communication devices are examples of devices that provide wireless communication.

In environments where the risk of interference to other devices or services is harmful or perceived as harmful, the option to use a wireless device may be restricted or eliminated. Airports, Hospitals, and Oxygen or flammable gas laden atmospheres are limited examples where use of wireless devices may be restricted or eliminated. When in environments where you are uncertain of the sanction to use wireless devices, ask the applicable authority for authorization prior to use or turning on the wireless device.

Every country has different restrictions on the use of wireless devices. Since your system is equipped with a wireless device, when traveling between countries with your system, check with the local Radio Approval authorities prior to any move or trip for any restrictions on the use of a wireless device in the destination country.

If your system came equipped with an internal embedded wireless device, do not operate the wireless device unless all covers and shields are in place and the system is fully assembled.

Wireless devices are not user serviceable. Do not modify them in any way. Modification to a wireless device will void the authorization to use it. Please contact manufacturer for service.

Only use drivers approved for the country in which the device will be used. See the manufacturer System Restoration Kit, or contact manufacturer Technical Support for additional information.

EU Declaration of Conformity (LVD,EMC)

For the following product :

Color Laser Beam Printer

(Product name)

CLP-510, CLP-510N

(Model Number)

Manufactured at :

Samsung Electronics Co.,Ltd. #259, Gongdan-Dong, Gumi-City, Gyungbuk, KOREA. 730-030

(factory name, address)

We hereby declare, that all major safety requirements, concerning to CE Marking Directive[93/68/EEC] and Low Voltage Directive [73/23/EEC], ElectroMagnetic Compatibility [89/336/EEC], amendments [92/31/EEC] are fulfilled, as laid out in the guideline set down by the member states of the EEC Commission.

This declaration is valid for all samples that are [illegible] is declaration, which are manufactured according to the production [illegible]

The standards relevant for th[illegible] equirements are as follows :

1. *Certificate of co[illegible] by :*
2. *Technical docume[illegible]*
   which will be mad[illegible] upon request.

Temporary

LVD : EN 60950:1992+A1+A2+A3+A4+A11, EN 60825-1:1994+A1

EMC : EN55022:1998incA1:2000, EN61000-3-2:2000,EN61000:3-3:1995incA1:2001
EN55024:1998incA1:2001, AS/NZS3548:1995,EN61000:4-2:1995, EN61000:4-1996,
EN61000:4-4:1995, EN61000:4-5:1995 EN61000:4-6:1996, EN61000:4-11:1994

LVD : TUV Rheinland

EMC : SAMSUNG Electronics EURO Q.A. Lab. in the U.K.

Samsung Electronics Co.,Ltd.

(Manufacturer)

Samsung Electronics Co.,Ltd.
#259,Gongdan-Dong,Gumi-City
Gyungbuk, Korea 730-030

2004-9-17

Whan-Soon Yim / Senior Manager

(place and date of issue) (name and signature of authorized person)

(Representative in the EU)

Samsung Electronics Euro QA Lab.
Blackbushe Business Park, Saxony Way
Yateley, Hampshire, GU46 6GG, UK

2004-9-17

Yong-Sang Park / Manager

(place and date of issue) (name and signature of authorized person)

1 Introduction

Congratulations on the purchase of your printer!

This chapter includes:

- **Special Features**
- **Printer Components**

Special Features

Your new printer is equipped with several special features that improve the print quality. You can:

Print in color with excellent quality and speed

- You can print in a full range of colors using cyan, magenta, yellow, and black.
- You can print up to 2400 x 600 dpi (effective output). For details, see the **Software User's Guide**.
- Your printer prints A4-sized paper at 20 ppm and letter-sized paper at 21 ppm (pages per minute).

Use multiple types of media easily

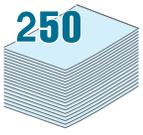

- The **Standard 250-sheet input tray** (Tray 1) and **optional 500-sheet input tray** (Tray 2) supports A4/letter-sized paper.
- The **Multi-purpose Tray** supports letterhead, envelopes, labels, custom-sized materials, postcards, and heavy paper. The **Multi-purpose Tray** also supports up to 100 sheets of plain paper.

Create professional documents

- Print **Watermarks**. You can customize your documents with a watermark, such as the word "Confidential." For details, see the **Software User's Guide**.
- Print **Booklets**. This feature enables you to easily print a document to create a book. Once printed, all you have to do is fold and staple the pages. For details, see the **Software User's Guide**.
- Print **Posters**. The text and pictures of each page of your document can be magnified and printed across several sheets of paper and taped together to form a poster. For details, see the **Software User's Guide**.

Save time and money

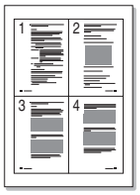

- You can print on both sides of the paper to save paper (**double-sided printing**). For details, see the **Software User's Guide**.
- You can print multiple pages on a single sheet of paper to save paper.
- You can use preprinted forms and letterhead. For details, see the **Software User's Guide**.
- This printer automatically **conserves electricity** by substantially reducing power consumption when not printing.

Print in various environments

You can print in **Windows 98SE/Me/NT 4.0/2000/2003/XP**. Windows NT 4.0 is only supported on the CLP-600N.

- Your printer is compatible with **Macintosh** and **various Linux OS**.
- Your printer comes with a **USB** interface.
- The CLP-600N comes with a built-in **Network interface**, 10/100 Base TX. The CLP-600 does not support a network interface.

  To use the CLP-600N in both wired and wireless network environments, you can install an optional wired/wireless network interface card. Contact your Samsung dealer or the retailer where you bought your printer. We strongly recommend that the card be installed by a trained service professional.

Printer Components

These are the main components of your printer. Note that all illustrations on this User's Guide are from the CLP-600N and that some parts may be different from your printer.

Front View

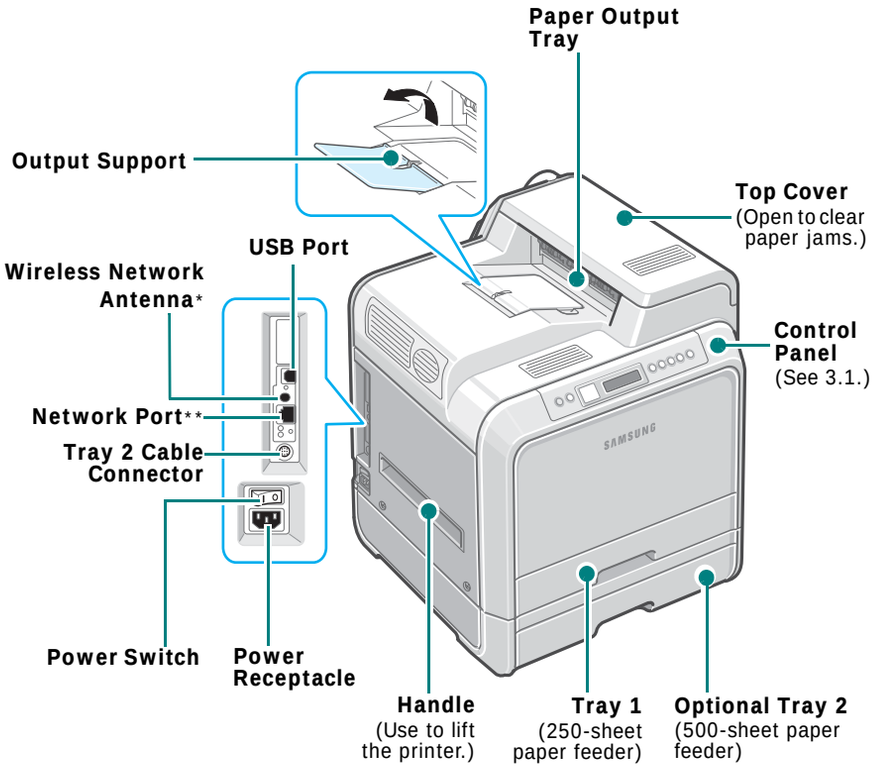

* Only the CLP-600N comes with a network port.

** This wireless network antenna is only available when you have purchased and installed a wired/wireless network card separately in the CLP-600N.

NOTE: The surface of the output tray may become hot if you print a large number of pages at once. Please make sure that you don't touch the surface, and prevent children from approaching it.

Right Side View

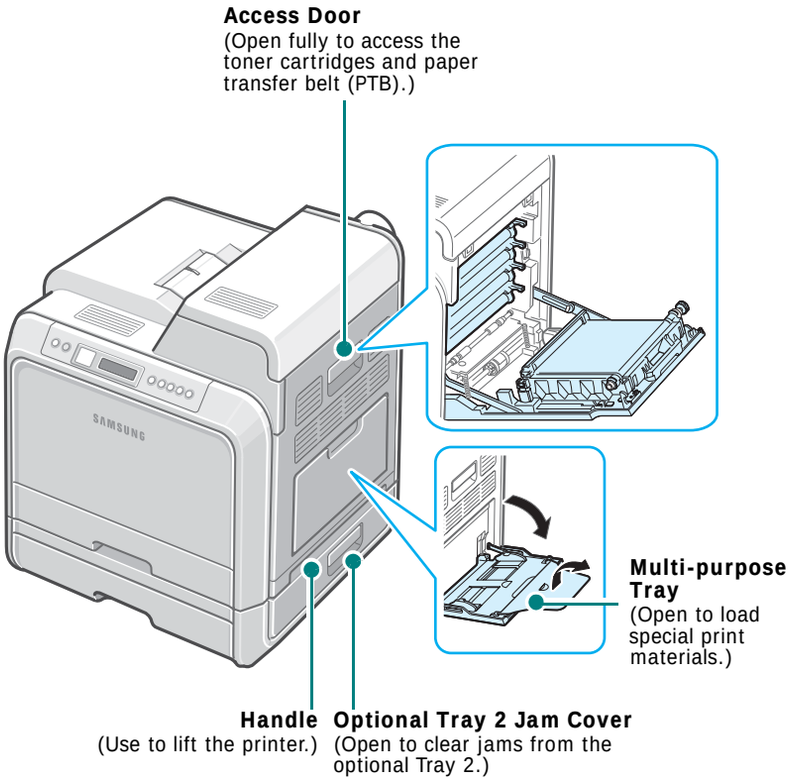

2 Setting Up Your Printer

This chapter gives you step-by-step instructions for setting up your printer.

This chapter includes:

- **Unpacking**
- **Installing the Toner Cartridges**
- **Loading Paper**
- **Connecting a Printer Cable**
- **Turning the Printer On**
- **Printing a Demo Page**
- **Changing the Display Language (CLP-600N Only)**
- **Installing the Printer Software**

Unpacking

1 Remove the printer and all of the accessories from the packing carton. Make sure that the printer has been packed with the following items:

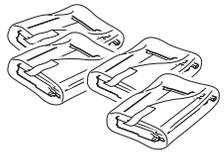

Toner Cartridges

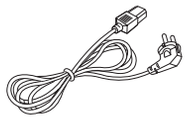

Power Cord

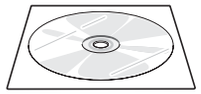

CD-ROM

Quick Install Guide

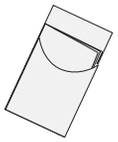

Optimum Setup Guide

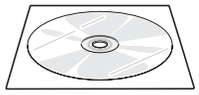

Network CD (CLP-600N only)

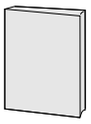

Network Quick Guide (CLP-600N only)

NOTES:
- If any items are missing or damaged, notify your dealer immediately.
- **Components may differ from one country to another.**
- The CD-ROM contains the printer driver, the User's Guide, and the Adobe Acrobat Reader program.
- The appearance of the power cord may differ depending on your country's specifications. The power cord must be plugged into a grounded power socket.

CAUTION: This printer weighs 29kg including the toner cartridges and the cassette. Use safe lifting and handling techniques. If you need to move the printer, it should be moved by two people. Use the lifting handles, as shown in the diagram (see page 1.2). Back injury could result if a single person attempts to lift the printer.

2 Carefully remove all of the packing tape from the printer.

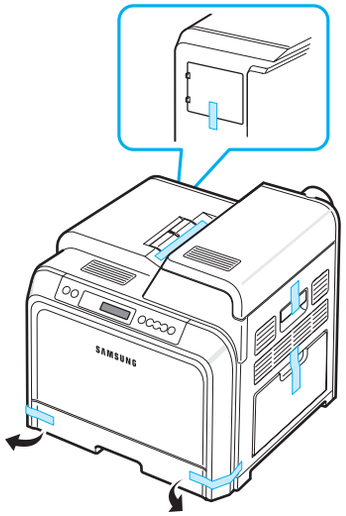

3 Pull the paper tray out of the printer and remove the packing tape from the tray.

4 Select a location for the printer:

- Leave enough room to open the printer trays and covers, and to allow for proper ventilation.
- Provide the proper environment:
  - A firm, level surface
  - Away from the direct airflow of air conditioners, heaters, or ventilators
  - Free of temperature, sunlight, and humidity extremes or fluctuations
  - Clean, dry, and free of dust

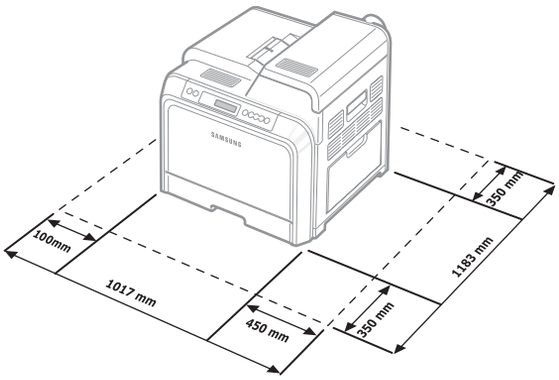

CAUTION: You must place your printer on a level surface. If you do not, print quality problems can occur.

Installing the Toner Cartridges

1 Using the handle, completely open the access door.

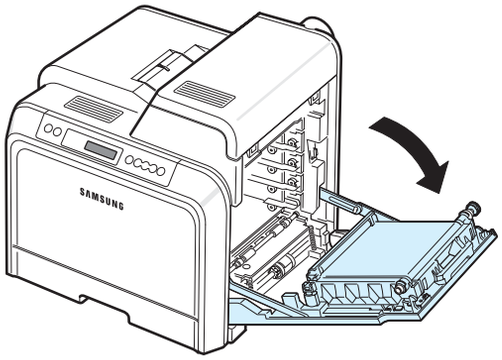

NOTE: The paper transfer belt is already installed in your printer.

2 Take the toner cartridges out of their packages.

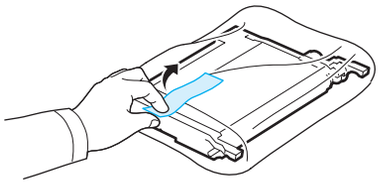

CAUTION:
- Do not use sharp objects, such as a knife or scissors, to open the toner cartridge packages. You could damage the surface of the toner cartridges.
- To prevent damage, do not expose the toner cartridges to light for more than a few minutes. Cover them with paper to protect them if necessary.
- Do not touch the green surface, the OPC drum, on the front of each toner cartridge with your hands or any other material. Use the handle on each cartridge in order to avoid touching this area.

3 Holding both handles on the toner cartridges, gently rock them from side to side to evenly distribute the toner.

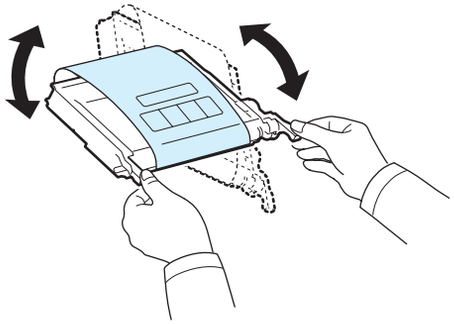

4 Place the toner cartridges on a flat surface, as shown, and remove the paper covering the toner cartridges by removing the tape.

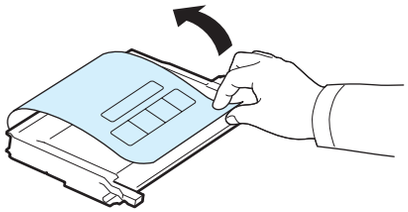

NOTE: If toner gets on your clothing, wipe it off with a dry cloth and wash it in cold water. Hot water sets toner into fabric.

5 On the inside right hand wall of the printer, a label identifies which color cartridge goes into each cartridge slot.

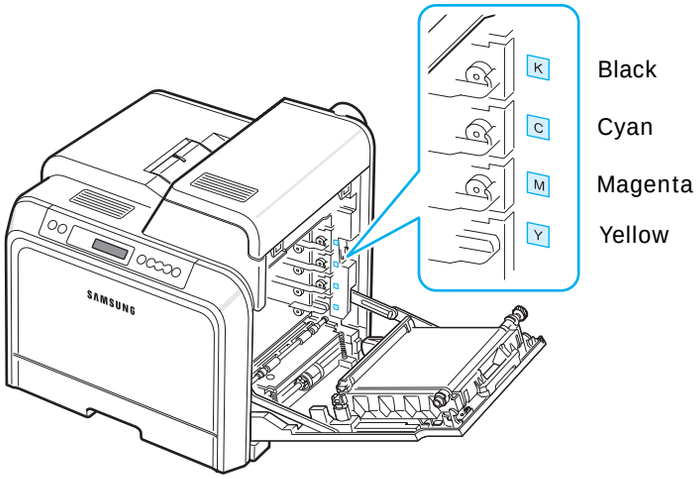

6 Grasp the handles on each toner cartridge. Align the toner cartridges with the slots inside the printer and insert them into their corresponding positions in the following order: Yellow, Magenta, Cyan, and then Black, until they click into place.

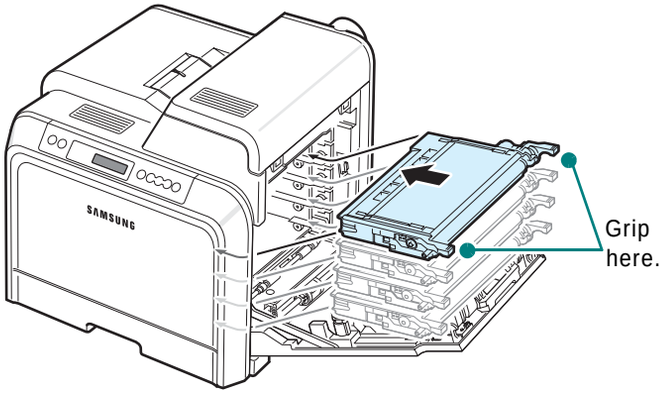

7 Close the access door. Make sure that the door is securely latched.

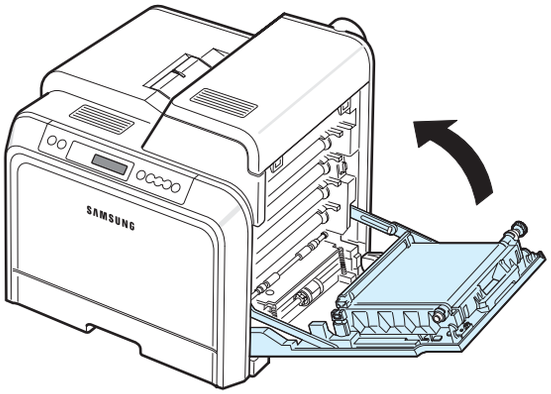

CAUTION: If the access door is not completely closed, the printer will not operate.

NOTE: When printing text at 5% coverage, you can expect a toner cartridge life of about 4,000 pages for black and color.

Loading Paper

The tray (Tray 1) can hold a maximum of 250 sheets of plain paper. You can use A4 and letter-sized paper.

To load paper:

1 Pull the tray out of the printer.

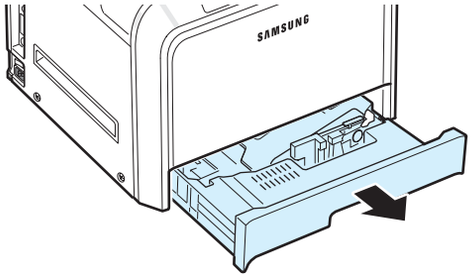

2 Push down on the metal plate until it locks into position.

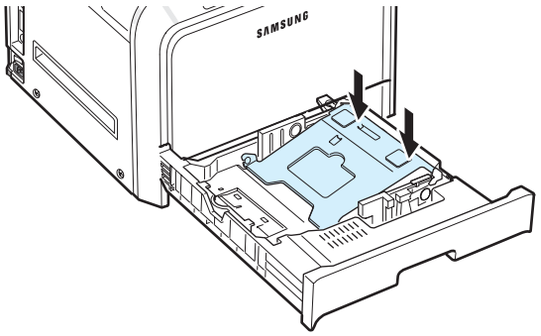

3 Flex the paper sheets back and forth to separate the pages and then fan them while holding one edge. Tap the edges of the stack on a flat surface to even it up.

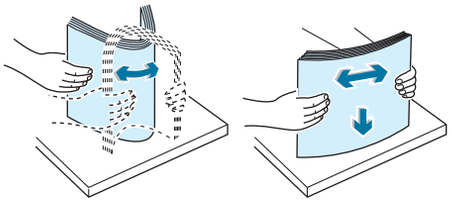

4 Load paper with the print side facing up.

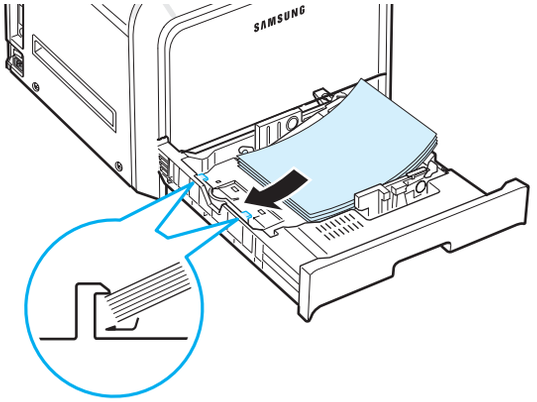

Make sure not to overfill the tray and that all four corners are flat in the tray and under the corner brackets, as shown below. Overfilling the tray may cause a paper jam.

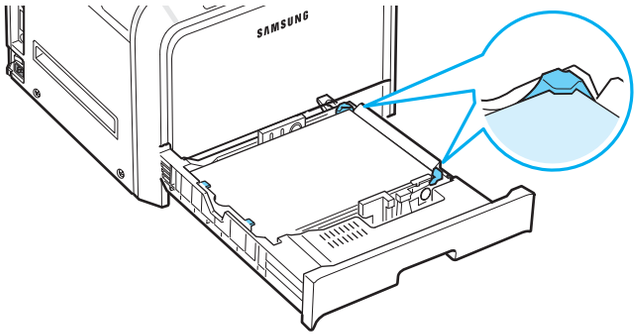

NOTE: If you want to change the size of the paper in the tray, refer to “Changing the Size of the Paper in the Tray” on page 2.5.

5 Slide the tray back into the printer.

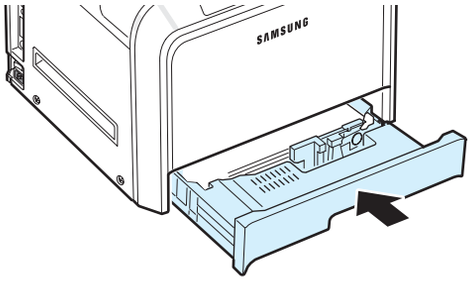

NOTE: After you load paper, you need to set up your printer for the paper type, size, and source you loaded. For details, see the **Software User’s Guide**.

Changing the Size of the Paper in the Tray

The tray is preset to Letter or A4 size, depending on your country. To change the size to A4 or Letter, you must adjust the paper length guide properly.

1 Pull the tray open. After you pull it all the way out, lift up the front part of the tray slightly to release the tray from the printer. Remove paper from the tray.

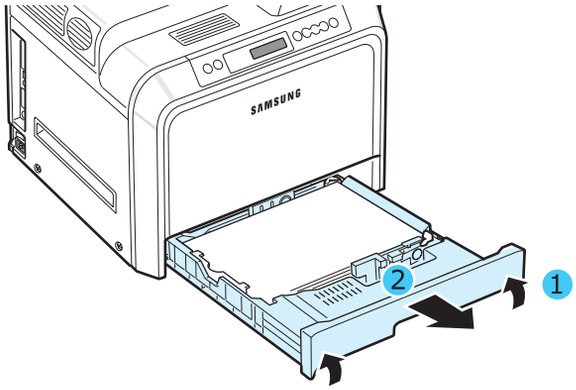

2 Push down on the metal plate until it locks into position.

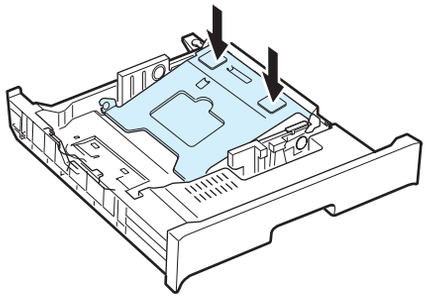

3 Lift the paper length guide and place it in the correct position for the paper size you are loading.

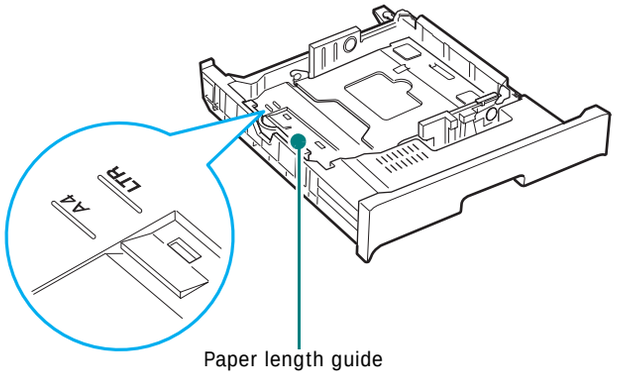

To remove the paper length guide, turn it slightly to your right to release the locks on the bottom of the guide, then pull it up.

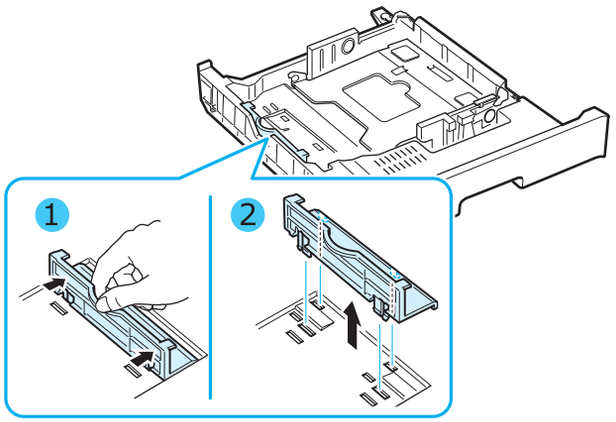

To place the paper length guide in the paper position you want, insert the locks on the bottom of the guide into the desired paper slot and push it all the way in.

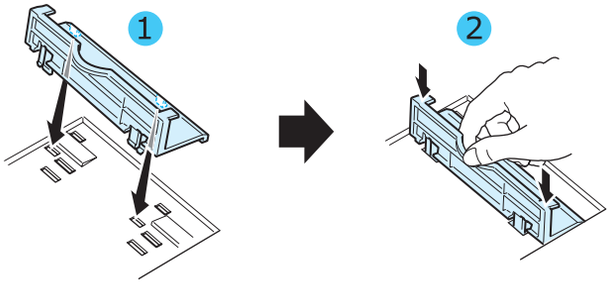

4 Holding the handle of the white stopper on the rear part of the tray, rotate the handle counter clockwise and remove it from the tray. After removing it, insert the stopper in the other hole and rotate it clockwise to lock it into position.

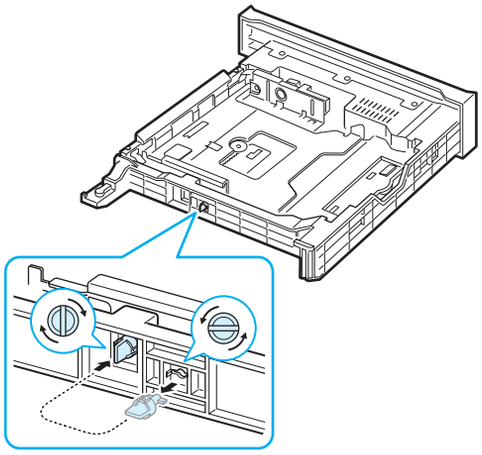

5 Squeeze the paper width guide, as shown and slide it to the stack of paper until it lightly touches the side of the stack. Do not push the guide too tightly against the edge of the paper as it may cause the paper to bend.

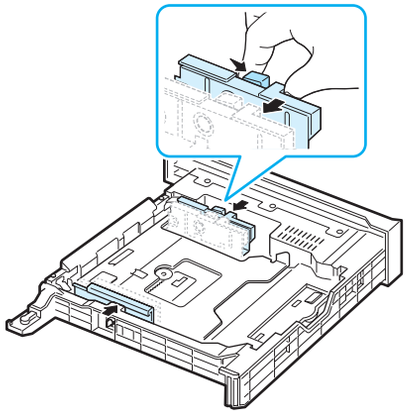

NOTES:
- Do not push the width guide far enough to cause the material to warp.
- If you do not correctly adjust the width guide, it may cause a paper jam.

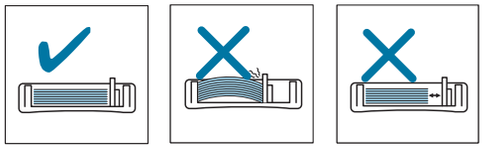

6 Load paper with the print side facing up. For more information, see steps 4 and 5 on page 2.4.

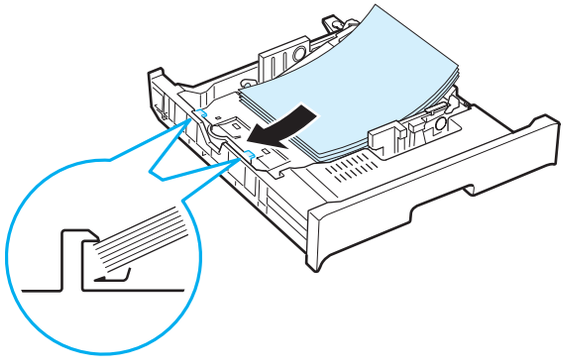

7 To replace the tray, lower the rear edge, align it with the slot, and slide it into the printer.

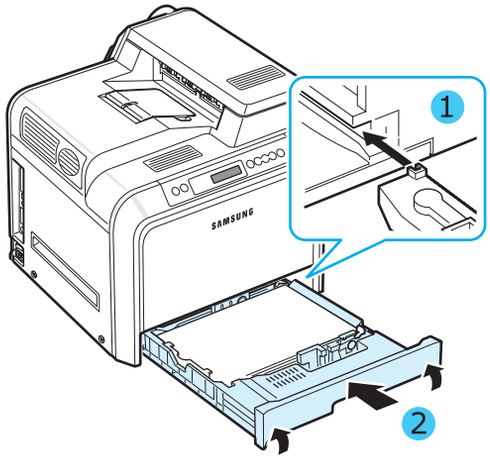

Connecting a Printer Cable

For Local Printing

To print from your computer in a local environment, you need to connect your printer to the computer with a Universal Serial Bus (USB) cable.

If you are a Macintosh user, you can use only a USB cable.

NOTE: Connecting the printer to the USB port of the computer requires a certified USB cable. You will need to buy a USB 2.0 compliant cable that is 3m or less in length.

1 Make sure that both the printer and the computer are turned off.

2 Plug the USB cable into the connector on the left rear of the printer.

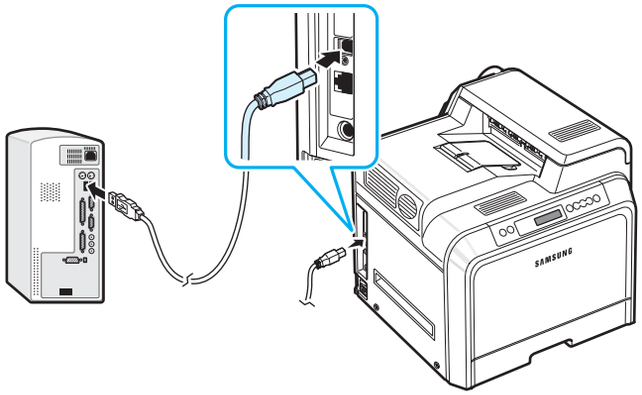

3 Connect the other end of the cable to the USB port on your computer.

NOTE: To print using the USB interface, you must run Windows 98SE/Me/2000/2003/XP or Macintosh with OS 10.3.x.

For Network Printing *(CLP-600N only)*

You can attach your printer to a network using an Ethernet cable (UTP cable with RJ.45 connector). The CLP-600N has a built-in network interface card.

If you want to use the printer in both wired and wireless network environments, you need to install an optional wired/wireless network interface card. Contact your Samsung dealer or the retailer where you bought the printer. We strongly recommend that the card be installed by a trained service professional.

Using an Ethernet Cable

1 Make sure that both the printer and the computer are turned off.

2 Plug one end of the Ethernet cable into the Ethernet network port on the left rear of the printer.

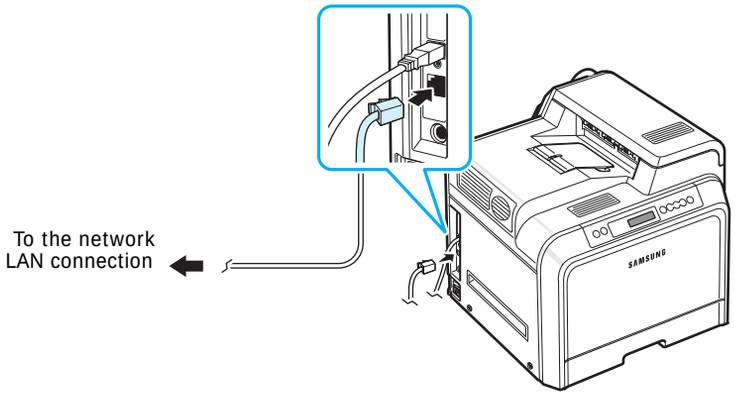

3 Plug the other end of the cable into a network LAN connection.

NOTE: After connecting the printer, you need to configure the network parameters on the control panel. See page 8.1. You can use the software supplied with the card. Refer to the Network User's Guide.

Turning the Printer On

1 Plug the power cord into the power receptacle on the left rear of the printer.

2 Plug the other end into a properly grounded AC outlet and turn on the power.

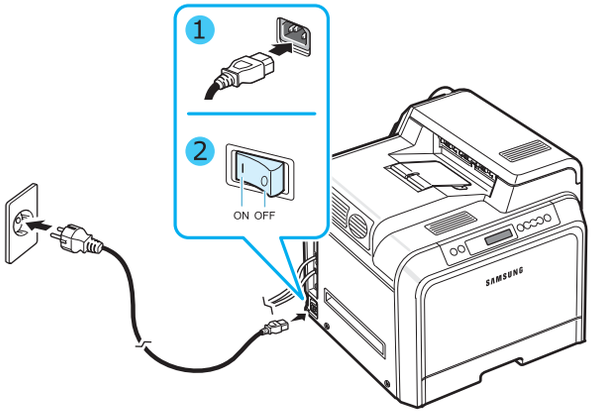

CAUTION:
- Some parts inside of the printer may be hot when power is on, or after printing. Be careful not to burn yourself when working inside the printer.
- Do not disassemble the printer when it is turned on or plugged in. Doing so may give you an electric shock.

Printing a Demo Page

Print a demo page to make sure that the printer is operating correctly.

To print a demo page:

In ready mode, press and hold the **On Line/Continue** button (On Line/Continue) on the control panel for 2 seconds to print a demo page.

A demo page showing the printer's features and capabilities is printed.

Changing the Display Language

(CLP-600N Only)

To change the language that is displayed on the control panel, take the following steps:

1. In ready mode, press the **Menu** button ( ) on the control panel until you see “Setup” on the bottom line of the display.
2. Press the **Enter** button ( ) to access the menu.
3. Press the **Enter** button ( ) when “LCD Language” displays on the bottom line of the display.
4. Press the scroll button (or) until the language you want to use displays.
5. Press the **Enter** button ( ) to save the selection.
6. Press the **On Line/Continue** button ( ) to return to ready mode.

Installing the Printer Software

You must install software using the supplied CD-ROM after you have set up your printer and connected it to your computer. For details, see the **Software User’s Guide**.

The CD-ROM provides you with the following software:

Programs for Windows

You can install the following printer software using the CD-ROM.

- **Printer driver** for Windows. Use this driver to take full advantage of your printer’s features. See the **Software User’s Guide** for details about installing the Samsung printer driver.
- **SmartPanel**. Appears when printing errors occur. See the **Software User’s Guide** for details about installing the SmartPanel program.

Macintosh Printer Driver

You can print from a Macintosh with your printer. Go to the **Software User’s Guide** for information about installing the print software and printing from a Macintosh.

Linux Driver

You can print from a Linux-based computer with your printer. Go to the **Software User’s Guide** for information about installing the Linux driver and printing from a Linux environment.

System Requirements

Before you begin, ensure that your system meets the minimum requirements. Your printer supports the following operating system.

- Windows 98SE/Me/NT 4.0/2000/XP/2003 - The following table shows Windows requirements.

Item	Requirements	
Operating system	Windows 98SE/Me/NT 4.0/2000/XP/2003	
RAM	98SE/Me	32 MB
	NT 4.0/2000	64 MB
	XP	128 MB
	2003	256 MB
Free Disk Space	98SE/Me/NT 4.0/2000/XP/2003	300 MB
Internet Explorer	5.0 or higher	

NOTES:
- For Windows NT 4.0/2000/XP/2003, the system administrator should install the software.
- Windows NT 4.0 is only supported on the CLP-600N.

- Macintosh 10.3.X - For details, see the **Software User’s Guide**.
- Various Linux OS - For details, see the **Software User’s Guide**.

Printer Driver Features

Your printer drivers will support the following standard features:

- Paper source selection
- Paper size, orientation, and media type
- number of copies

The table below lists a general overview of features supported by your printer drivers.

Feature	Printer driver		
	Win98SE/Me/ NT 4.0/2000/ XP/2003	Linux	Macintosh (CPUS)
Color Mode	Y	N	Y
Print Quality Option	Y	Y	Y
Poster Printing	Y	N	N
Double-sided Printing	Y	N	N
Multiple Pages Per Sheet (N-up)	Y	Y	Y
Fit to Page Printing	Y	N	N
Scale Printing	Y	N	Y
Booklet Printing	Y	N	N
Different Source For First Page	Y	N	Y
Watermark	Y	N	N
Overlay	Y	N	N
Truetype Fonts Option	Y	N	N

NOTE: For details about installing software and using its features, see the **Software User's Guide**.

3 Using the Control Panel

This chapter describes how to use the printer's control panel.

This chapter includes:

- **Understanding the Control Panel**
- **Using Control Panel Menus (CLP-600N Only)**

Understanding the Control Panel

The control panel on the top right side of your CLP-600N printer has a display and seven buttons. For the CLP-600, the control panel has no display and two buttons.

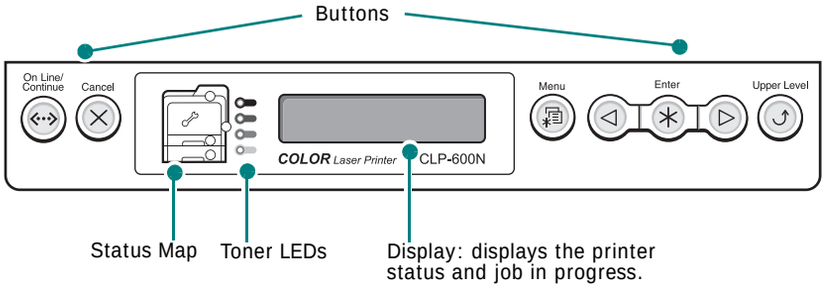

* The figure shows a CLP-600N's control panel.

Display *(CLP-600N Only)*

Message	Description
Ready	• The printer is on-line and ready to print. • If you press the **On Line / Continue** button, the printer goes off-line.
Offline	• The printer is off-line and cannot print. • If you press the **On Line / Continue** button, the printer switches on-line.
Processing...	• The printer is printing. • If you want to stop printing, press the **Cancel** button.
Sleeping...	• The printer is in Power Save mode, using less power. When a print job is received from the computer, or if any button is pressed, the printer switches to on-line. • To deactivate the Power Save mode or change the power-saving time, see page 3.4.

See "Understanding Display Messages" on page 7.14 for a complete listing of all printer messages.

Buttons

Button	Description
(status map)	When a paper jam occurs, a lamp turns on at the corresponding location on the Status map so that you can locate the paper jam. If you use the CLP-600N, the display on the control panel also shows the corresponding error message, indicating the location of the jam. For details on the meaning of the LEDs and error messages, see 7.4.
(toner LEDs)	When a toner cartridge is empty, a corresponding lamp, indicating the color of the toner cartridge, turns on. Replace the corresponding toner cartridge with a new one. See page 6.4. Or, if you have installed an invalid toner cartridge, a corresponding lamp turns on. Install only Samsung-approved toner cartridges, designed for your printer.
On Line/ Continue	• Press to switch between on-line and off-line. • In menu mode, press to return to ready mode. The color of the **On Line/Continue** button indicates the status of the printer.

Green	On	The printer is on-line and can receive data from the computer.
	Blinking	• When the light blinks slowly, the printer is receiving data from the computer. • When the light blinks quickly, the printer is receiving and printing data.
Orange	On	Check the display message. See page 7.14 for details on the meaning of the error message.
	Blinking	A minor error has occurred and the printer is waiting for the error to be cleared. Check the display message. When the problem is cleared, the printer resumes printing. If you want to ignore this warning, press this button.
Off	• The printer is off-line and cannot print. • The printer is in Power Save mode. When data is received, it switches to on-line automatically.	

Menu	This button is available only with the CLP-600N. • Press to enter menu mode. • In menu mode, press to scroll through the menus.
Enter	This button is available only with the CLP-600N. In menu mode, press to select the displayed sub menu item or to confirm the changed setting. The selected item is marked with an *.
	This button is available only with the CLP-600N. In menu mode, press to scroll through sub menu items or setting options. Pressing moves you to the next option and pressing sends you back to the previous option.
Cancel	• Press to cancel the current print job. • In menu mode, press to return to ready mode.
Upper Level	This button is available only with the CLP-600N. In menu mode, press to go back to the upper menu level.

Using Control Panel Menus *(CLP-600N Only)*

A number of menus are available to make it easy for you to change printer settings. The diagram on page 3.3 shows the menus and all of the items available in each menu. The items in each menu and the options you can select are described in more detail in the tables beginning on page 3.3.

Accessing Control Panel Menus

You can configure your printer from the printer's control panel. You can also use the control panel menus while the printer is in use.

1. In ready mode, press the **Menu** button ( ) until you see the menu you want on the bottom line of the display.
2. Press the **Enter** button ( ) to access the menu.
3. Press the scroll button (or) until the menu item you want displays on the bottom line.
4. Press the **Enter** button ( ) to confirm the selected item.
5. If the menu item has sub menus, repeat steps 3 and 4.
6. Press the scroll button (or) until the menu item you want displays on the bottom line.
7. Press the **Enter** button ( ) to save your input or selection.

   An asterisk (*) appears next to the selection on the display, indicating that it is now the default.

8 To exit the menu, press the **Upper Level** button ( ) repeatedly, or the **Cancel** button( ).

After 60 seconds of inactivity (no key being pressed), the printer automatically returns to ready mode.

NOTE: Print settings made from the printer driver on a connected computer override the settings on the control panel.

Overview of Control Panel Menus

The control panel menus are used to configure the printer. The control panel provides access to the following menus:

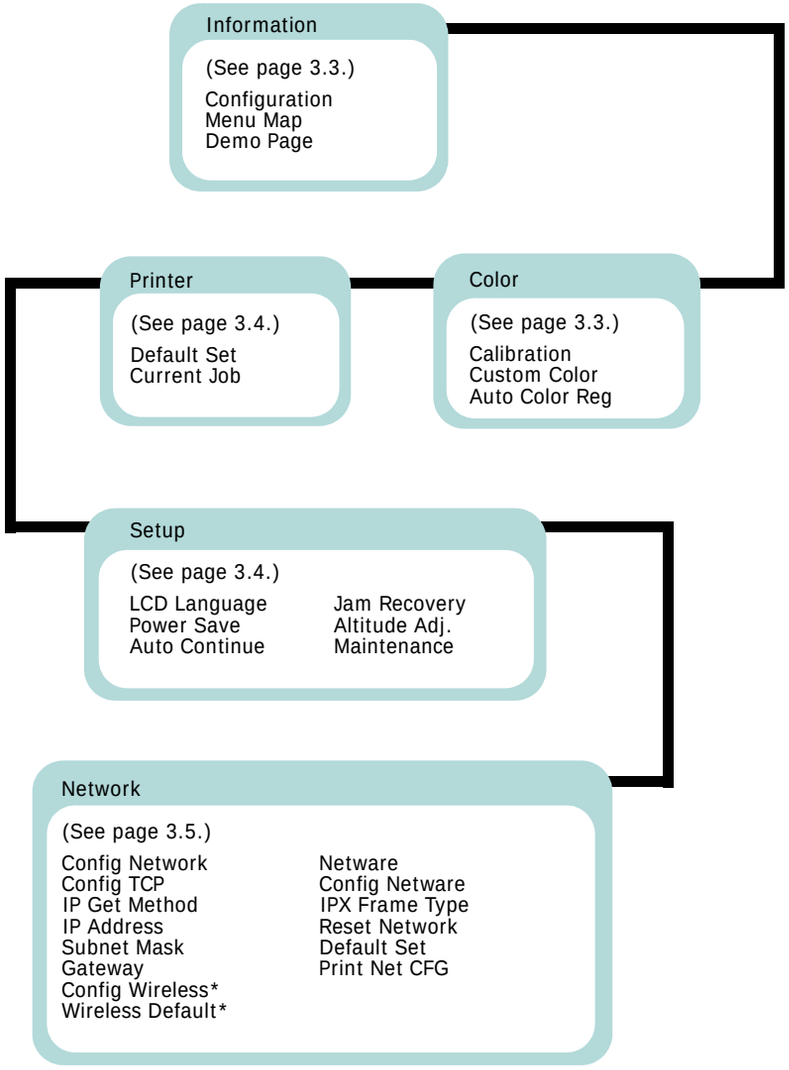

* This menu only appears when an optional wired/wireless network interface card has been installed.

Information Menu

This menu contains information pages that you can print to give details about the printer and its configuration.

Item	Explanation
Configuration	The configuration page shows the printer's current configuration. See page 6.1.
Menu Map	The menu map shows the layout and current settings of the control panel menu items.
Demo Page	The demo page allows you to check to see if your printer is printing properly.

Color Menu

This menu allows you to adjust the color setting.

(*: the default setting)

Item	Explanation
Calibration	Options: Off, Auto* This menu item allows you to set the printer to periodically calibrate itself for the best possible color print quality. • **Off**: The printer is calibrated according to the default settings. • **Auto**: Automatically calibrates the printer to produce the best possible print quality for color documents.
Custom Color	This item allows you to adjust contrast, color by color. **CMYK**: Allows you to adjust the contrast of the toner in each toner cartridge. • **Default**: Optimizes colors automatically. • **Manual Adjust**: Allows you to manually adjust the color contrast for each cartridge. **NOTE**: You should use the **Default** setting for best color quality.
Auto Color Reg	This menu item allows you to adjust the position of color texts or graphics to match the position of the printed colors to those on your screen. **Run Now**: The printer executes the auto color registration now.

Printer Menu

This menu allows you to reset the printer settings or cancel the current job.

Item	Explanation
Default Set	This menu item allows you to restore the printer's factory default settings.
Current Job	You can cancel the current print job and remove it from the printer buffer.

Setup Menu

Use the **Setup** menu to configure a variety of printer features.

(*: the default setting)

Item	Explanation
LCD Language	Options: English*, Czech, Danish,Dutch, Finnish, French, German, Hungarian, Italian, Norwegian, Polish, Portuguese, Russian, Spanish, Swedish, Turkish, Korean, Chinese The LCD Language setting determines the language of the text that appears on the control panel display and information printing.
Power Save	Options: 5 Minutes, 10 Minutes, 15 Minutes, 30 Minutes*, 45 Minutes, 60 Minutes, 120 Minutes * 30 Minutes for USA, 120 Minutes for Europe When the printer does not receive data for an extended period of time, power consumption is automatically lowered. You can set how long the printer waits before going to power save.
Auto Continue	Options: Off, On* This item determines whether or not the printer continues printing when it detects paper not matched to your paper setting. • **Off**: If a paper mismatch occurs, the message remains on the display and the printer remains off-line until you insert the correct paper. • **On**: If the paper is mismatched, an error message displays. The printer goes off-line for 30 seconds then automatically clears the message and continues printing.
Jam Recovery	Options: Off*, On This item determines how the printer behaves when a paper jam occurs. • **Off**: The printer does not reprint pages. Printing performance might be increased with this setting. • **On**: The printer automatically reprints pages after you clear the paper jam.
Altitude Adj.	Options: Low*, High You can optimize the print quality according to your altitude.
Maintenance	This item allows you to maintain the toner cartridges and other consumables. • **Check Others**: This item allows you to view the total number of images printed with each of the consumable items, such as the paper transfer belt or fuser unit. **Transfer Belt**, **Fuser**: allows you to check the total number of images printed with the current paper transfer belt or the fuser unit. **MP Pickroll**, **Tray1 Pickroll**, **Tray2 Pick roll**: These items are only for service technicians. • **Alarm Shortage**: This item determines how the printer behaves when consumable items run low. **Off**: The printer does not display a warning message. **On**: The printer displays a warning message.

Network Menu

This menu lets you configure the network interface card installed in your printer according to how the network is set up. You can upgrade the network interface card firmware, and print the configuration.

(*: the default setting)

Item	Explanation
Config Network	Options: Yes, No* Sets whether or not you configure the network. If you select **Yes**, you can configure the TCP/IP and Netware menus. If you select **Yes**, the following options are available: **Config TCP**, **Config Wireless**, and **Netware**.
Config TCP	Options: Yes, No* Select whether you set the IP address or not. If you select **Yes**, you can configure the IP address. If you select **Yes**, the **IP Get Method** option appears on the display. You can select how to get the IP address.
IP Get Method	Options: Static*, BOOTP, DHCP You can set this item only when you set the **Config TCP** to **Yes**. • **Static**: You can enter an IP address, subnetmask, and gateway manually. • **BOOTP**: The BOOTP server allots an IP address to you automatically. • **DHCP**: The DHCP server allots an IP address to you automatically.
IP Address	You can select this item only when you set **IP Get Method** to **Static**. This item lets you enter an IP address manually. Press the scroll button to set the value of the 1st byte between 1 and 255, and then press the **Enter** button. Set the value for the 2nd, 3rd, and 4th byte the same way.
Subnet Mask	You can set this item only when you set **IP Get Method** to **Static**. This item lets you enter a subnet mask manually. Press the scroll button to set the value of the 1st byte between 1 and 255, and then press the **Enter** button. Set the value for the 2nd, 3rd, and 4th byte the same way.
Gateway	You can set this item only when you set **IP Get Method** to **Static**. This item lets you enter a gateway manually. Press the scroll button to set the value of the 1st byte between 1 and 255, and then press the **Enter** button. Set the value for the 2nd, 3rd, and 4th byte the same way.
Config Wireless	Values: Yes, No* Configure the wireless network environments. If you select **Yes**, the following options are available: **SSID**, **Operation Mode**, **Frequency Mode**, **Channel**, **Security Mode**, **Authentication**, **WEP Encryption**, **Using Key**, **Key Type**, and **Key1~Key4**. See “Configuring the Wireless Network” on page 8.4 **NOTE**: This menu only appears when an optional wired/wireless network interface card has been installed.
Wireless Default	This item performs a simple reset and restores the factory default for the wireless configuration. **NOTE**: This menu only appears when an optional wired/wireless network interface card has been installed.
Netware	Options: On*, Off You can select whether or not to use the Netware protocol. If you select **On**, you can access the Config Netware menu item. In the **Config Netware** menu, you can specify the frame type parameter used on your network.
Config Netware	Options: Yes, No* You can set this item only when you set **Netware** to **On**. This item lets you select whether or not you set the frame type parameter. Select **Yes** to select the frame type. If you select **Yes**, the **IPX Frame Type** option appears on the display.

Item	Explanation
IPX Frame Type	Values: Auto*, EN_8023, EN_II, EN_8022, EN_SNAP You can select this item only when you set **Config Netware** to **Yes**. This item lets you select the IPX Frame Type. • **Auto**: You can set a frame type automatically. • **EN_8022**: Select this value to use the IEEE 802.2 frame type. • **EN_8023**: Select this value to use the IEEE 802.3 frame type. • **EN_II**: Select this value to use the ETHERNET II frame type. • **EN_SNAP**: Select this value to use the SNAP frame type.
Reset Network	This item reboots the network interface card.
Default Set	This item performs a simple reset and restores the factory default settings for the network configuration.
Print Net CFG	This item prints a page showing the network parameters you have set.

4 Using Print Materials

This chapter will help you understand the types of paper you can use with your printer and how to properly load paper in the different paper trays for the best print quality.

This chapter includes:

- **Choosing Paper and Other Materials**
- **Loading Paper**
- **Printing on Special Print Materials**

Choosing Paper and Other Materials

You can print on a variety of print materials, such as plain paper, envelopes, labels, card stock, and so on. See “Printing on Special Print Materials” on page 4.4. To get the best possible print quality, use only high-quality, copier-grade paper.

When you choose print materials, consider the following:

- **Desired outcome**: The paper you choose should be appropriate for the project.
- **Size**: You can use any size paper that fits easily within the paper adjusters of the paper tray.
- **Weight**: Your printer supports paper weights as follows:

  -20~24lbs (75~90g/m^2) bond for Tray 1 or optional Tray 2

  -20~43lbs (75~163g/m^2) bond for the Multi-purpose Tray
- **Brightness**: Some papers are whiter than others and produce sharper, more vibrant images.
- **Surface smoothness**: The smoothness of the paper affects how crisp the printing looks on the paper.

CAUTION: Using a material that does not conform to the specifications listed on page 10.3 can cause problems that may require service. This service will not be covered by the warranty or service agreements.

Sizes and Capacities

Size	Input Source / Capacity*			
	Tray 1	Tray 2 (option)	Multi-purpose Tray	
			Automatic Feed	Manual Feed
Plain Paper	250	500	100	1
Envelopes**	—	—	10	1
Labels**	—	—	10	1
Card stock**	—	—	10	1

* Depending on paper thickness, maximum capacity may be reduced.
** If you are experiencing excessive jamming, feed one sheet at a time through the Multi-purpose Tray.

Guidelines for Paper and Special Materials

When selecting or loading paper, envelopes, or other special materials, keep these guidelines in mind:

- Attempting to print on damp, curled, wrinkled, or torn paper can cause paper jams and poor print quality.
- Use cut-sheet paper only. You cannot use multi-part paper.
- Use only high-quality, copier grade paper for the best print quality.
- Do not use paper with irregularities, such as tabs or staples.
- Do not attempt to load any tray while printing, and never overfill the tray. This could cause a paper jam.
- Avoid paper with embossed lettering, perforations, or a texture that is too smooth or too rough.
- Colored paper should be of the same high quality as white photocopy paper. The pigments must be able to withstand the printer’s fusing temperature of 180°C (356°F) for 0.1 seconds without deteriorating. Do not use paper with a colored coating that was added after the paper was produced.
- Preprinted forms must be printed with nonflammable, heat-resistant ink that does not melt, vaporize, or release hazardous emissions when subjected to the printer’s fusing temperature.
- Store paper in its ream wrapper until you are ready to use it. Place cartons on pallets or shelves, not on the floor.
- Do not place heavy objects on top of the paper, whether it is packaged or unpackaged.
- Keep paper away from moisture, direct sunlight, or other conditions that can cause it to wrinkle or curl.

NOTE: Do not use carbonless paper or tracing paper. These types of paper are unstable at the fusing temperature and can give off fumes, or cause damage to the printer.

Loading Paper

Proper paper loading helps prevent paper jams and ensures trouble-free printing. Do not remove the paper tray while a job is printing. Doing so may cause a paper jam. See “Sizes and Capacities” on page 4.1 for acceptable paper capacities for each tray.

Using Tray 1

Load the print material you use for the majority of your print jobs in Tray 1.

Tray 1 can hold a maximum of 250 sheets of plain A4 or letter-sized paper.

You can purchase an optional tray, Tray 2, and attach it below Tray 1, to load an additional 500 sheets of paper. See 9.1 for more information about installing the optional Tray 2.

To load paper, pull the tray and the load the paper **with the print side up**.

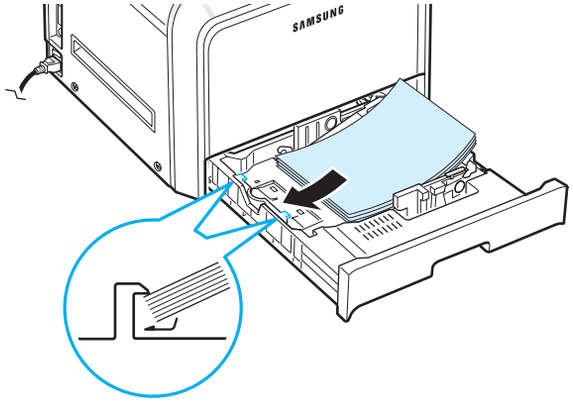

For details about loading paper in the paper tray, see “Loading Paper” on page 2.4.

NOTE: If you experience problems with paper feed, place one sheet at a time in the Multi-purpose Tray.

Using the Optional Tray

The optional tray, Tray 2, can hold a maximum of 500 sheets of plain paper.

To load paper in Tray 2, follow the instructions for loading paper on page 2.4.

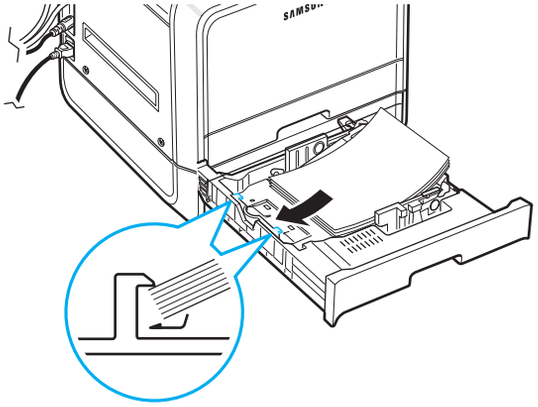

Using the Multi-purpose Tray

The Multi-purpose Tray is located on the right side of your printer. It can be closed when not in use, making the printer more compact.

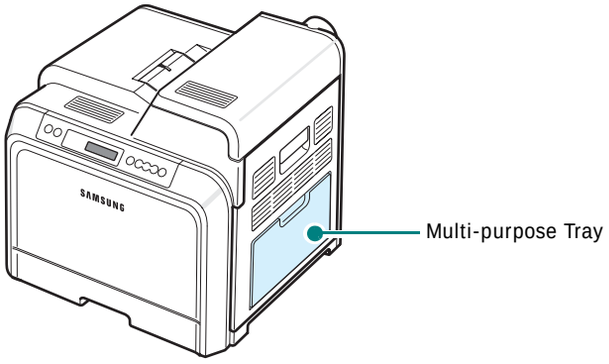

The Multi-purpose Tray can hold several sizes and types of material, such as cards and envelopes. You may also want to use the Multi-purpose Tray for single page print jobs on letterhead, colored paper for use as separator sheets, or other special materials that you do not normally keep in the paper tray. You can load approximately 100 sheets of plain paper, 10 envelopes, 10 sheets of card stock, or 10 labels at a time.

- Load only one size of print material at a time in the Multi-purpose Tray.
- To prevent paper jams, do not add paper when there is still paper in the Multi-purpose Tray. This also applies to other types of print materials.
- Print materials should be loaded face down with the top edge going into the Multi-purpose Tray first, and be placed in the center of the tray.

To load print material in the Multi-purpose Tray:

1 Lower the Multi-purpose Tray and unfold the paper support extension, as shown.

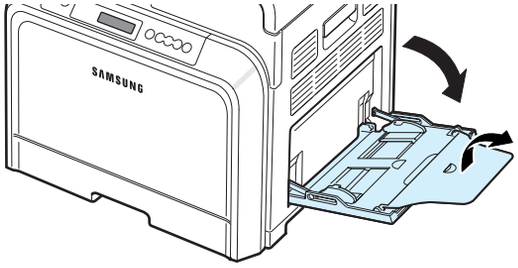

2 If you are using paper, flex or fan the edge of the paper stack to separate the pages before loading.

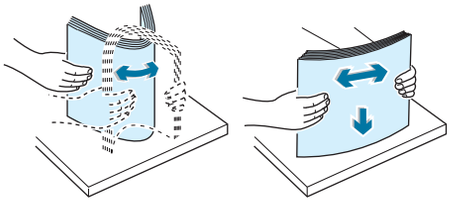

3 Load the print material **with the print side down**.

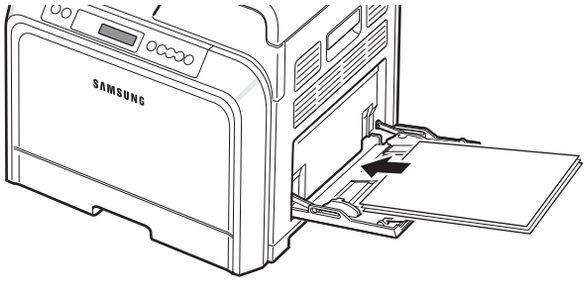

4 Squeeze the paper width guide and slide it to the edge of the print material without causing it to bend.

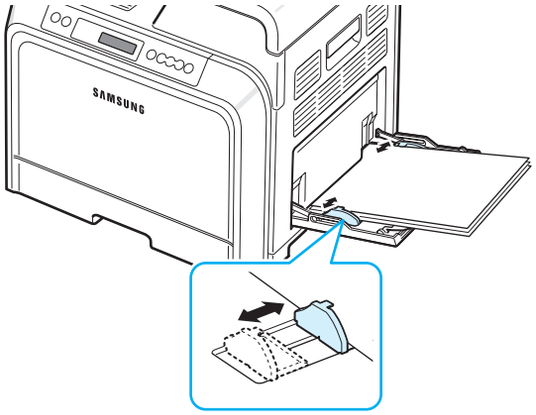

If you want to print on previously printed paper from the Multi-purpose Tray, the printed side should be facing up with the uncurled edge toward the printer. If you experience problems with the paper feeding, turn the paper around.

NOTE: Make sure that you have not loaded too much print material. The print material buckles if you load a stack that is too deep or if you push it in too far.

5 When you print a document, set the paper source to **Multi-Purpose Tray** and select the appropriate paper size and type in the software application. For details, see the **Software User's Guide**.

NOTE: After printing, fold away the paper support extension and close the Multi-purpose Tray.

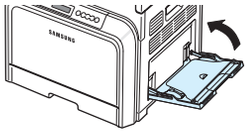

Using the Manual Feed

You can manually load a sheet of print material in the Multi-purpose Tray if you select **Manual Feed** in the **Source** option from the **Paper** tab when you change print settings to print a document. For details about changing print settings, see the **Software User's Guide**. Manually loading paper can be helpful when you want to check the print quality after each page is printed.

This loading procedure is almost the same as the procedure for loading in the Multi-purpose Tray, except you load paper sheet-by-sheet in the tray, send print data to print the first page, and press the **On Line / Continue** button ( ) on the control panel to print each following page.

1 Lower the Multi-purpose Tray and unfold the paper support extension, as shown.

2 Load a sheet of print material **with the print side down**.

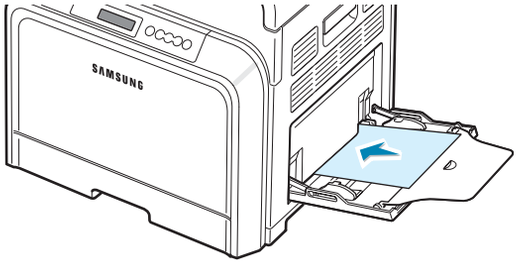

3 Squeeze the paper width guide and slide it to the edge of the paper without causing it to bend.

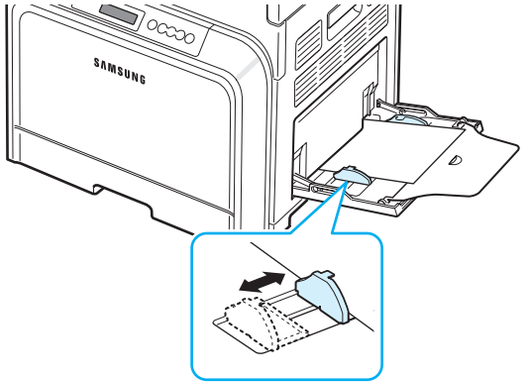

4 When you print a document, set the paper source to **Manual Feed** and select the appropriate paper size and type in the software application. For details, see the **Software User's Guide**.

5 Print the document.

6 Press the **On Line / Continue** button ( ).

The printer picks up the print material and prints.

NOTE: If you don't press the button after a pause, the paper will automatically fed into the printer.

7 After one page is printed, insert the next sheet into the Multi-purpose Tray and press the **On Line / Continue** button ( ).

Repeat this step for every page to be printed.

Printing on Special Print Materials

Printing on Envelopes

- Load envelopes into the Multi-purpose Tray only.
- Only use envelopes recommended for laser printers. Before loading envelopes in the Multi-purpose Tray, make sure that they are undamaged and are not stuck together.
- Do not feed stamped envelopes.
- Never use envelopes with clasps, snaps, windows, coated linings, or self-stick adhesives.

To print on envelopes:

1 Open the Multi-purpose Tray and unfold the paper support.

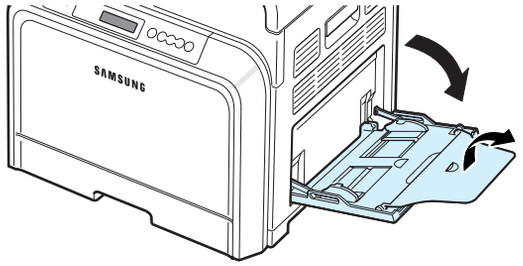

2 Flex or fan the edge of the envelope stack to separate them before loading.

3 Load the envelopes into the Multi-purpose Tray **with the flap side up**. The end of the envelope with the stamp area enters the printer first.

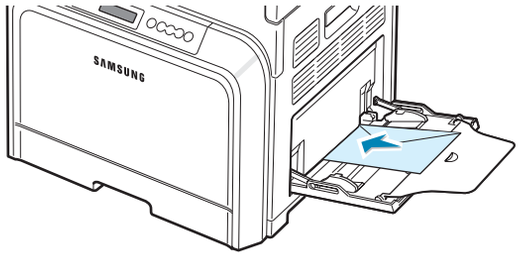

4 Squeeze the paper width guide and slide it to the edge of the envelope stack without causing it to bend.

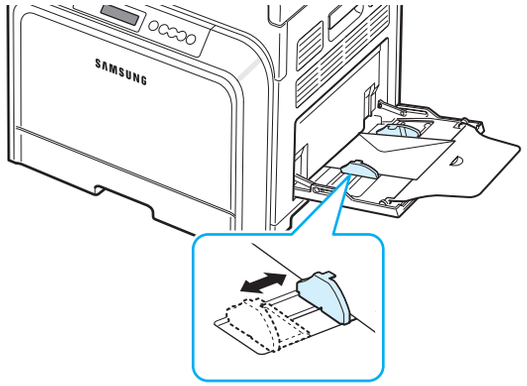

5 When you print, set the paper source to **Multi-Purpose Tray** and the paper type to **Envelope**, and select the appropriate size in the software application. For details, see the **Software User's Guide**.

Printing on Labels

- Only use labels recommended for laser printers.
- Verify that the labels' adhesive material can tolerate a fusing temperature of 180°C (356°F) for 0.1 seconds.
- Make sure that there is no exposed adhesive material between the labels. Exposed areas can cause labels to peel off during printing, which can cause paper jams. Exposed adhesive can also cause damage to printer components.
- Never print on the same sheet of labels more than once, or print on a partial sheet of labels.
- Do not use labels that are separating from the backing sheet or are wrinkled or damaged in any way.
- To prevent labels from sticking together, do not let the printed label sheets stack up as they are printed out.

To print on labels:

1 Open the Multi-purpose Tray and unfold the paper support.

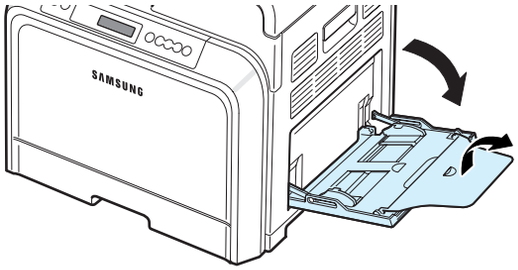

2 Load labels in the Multi-purpose Tray only, **with the print side down and the top, short edge in first**. Adjust the guide to fit the width of the labels.

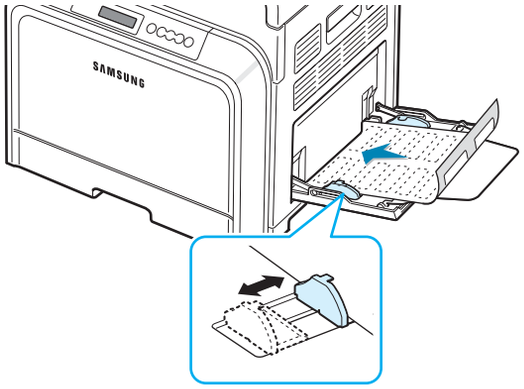

3 When you print, set the paper source to **Multi-Purpose Tray** and the paper type to **Labels**, and select the appropriate size in the software application. For details, see the **Software User's Guide**.

Printing on Preprinted Paper

- Preprinted paper is paper that has some type of printing on it before it is sent through the printer (paper that has a preprinted logo at the top of the page, for example).
- Letterhead must be printed with heat-resistant ink that will not melt, vaporize, or release hazardous emissions when subjected to the printer's fusing temperature of 180°C (356°F) for 0.1 seconds.
- Ink on letterhead must be non-flammable and should not adversely affect printer rollers.
- Forms and letterhead should be sealed in moisture-proof wrapping to prevent changes during storage.
- Before you load preprinted paper, such as forms and letterhead, verify that the ink on the paper is dry. During the fusing process, wet ink can come off of preprinted paper, reducing the print quality.

To print on preprinted paper:

1 Open the Multi-purpose Tray and unfold the paper support.

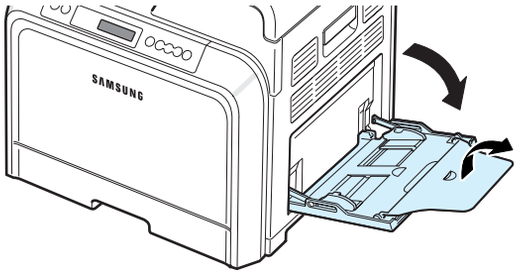

2 Load letterhead in the Multi-purpose Tray only, **with the print side down and the top and short edge first**. Adjust the guide to fit the edge of the paper stack.

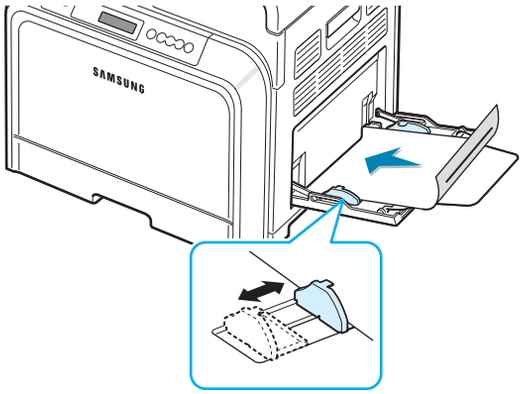

3 When you print, set the paper source to **Multi-Purpose Tray** and the paper type to **Preprinted**, and select the appropriate paper size in the software application. For details, see the **Software User's Guide**.

Printing on Card Stock or Custom-sized Materials

- Postcards, 3.5in. by 5.5in. (index) cards and other custom-sized materials can be printed with your printer. The minimum size is 3.5in. by 5.5in. (90mm by 140mm) and the maximum size is 8.5in. by 14in. (216mm by 356mm).
- Always insert the short edge into the Multi-purpose Tray first. If you want to print in landscape mode, make this selection using your software. Inserting the long edge first may cause a paper jam.
- Do not load more than 10 cards into the Multi-purpose Tray at a time.
- Do not print on material smaller than 90mm (3.5in.) wide or 140mm (5.5in.) long.
- In the software application, set margins at least 4.3mm away from the edges of the material.

To print on card stock:

1 Open the Multi-purpose Tray and unfold the paper support.

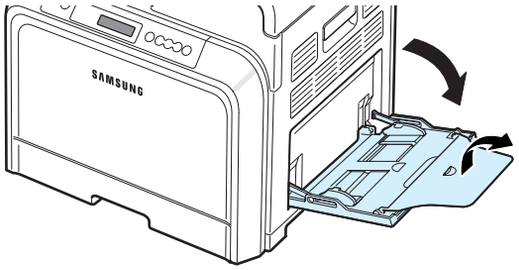

2 Load print material in the Multi-purpose Tray only, **with the print side down and the short edge first**. Slide the guide until it lightly touches the stack without causing it to bend.

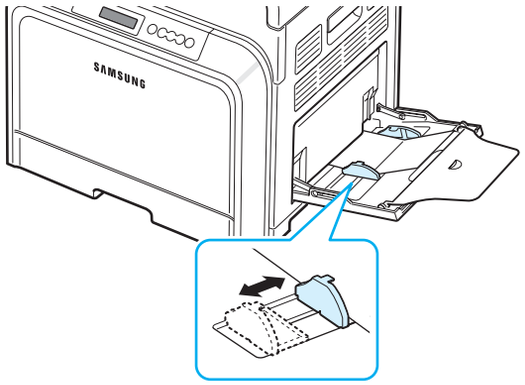

3 When you print, set the paper source to **Multi-Purpose Tray** and select the appropriate size and type in the software application. For details, see the **Software User's Guide**.

If the size of your print material is not listed in the **Size** box in the **Paper** tab, click the **Custom** button and set the size manually.

5 Basic Printing

This chapter explains common printing tasks.

- **Printing a Document**
- **Canceling a Print Job**

Printing a Document

This printer allows you to print from various Windows applications, a Macintosh computer, or a Linux system. The exact steps for printing a document may vary depending on the application you use.

For details about printing, see the **Software User's Guide**.

Canceling a Print Job

If the print job is waiting in a print queue or print spooler, such as the printer group in Windows, delete the job as follows:

1. Click the Windows **Start** button.
2. For Windows 98SE/NT 4.0/2000/Me, select **Settings** and then **Printers**.

   For Windows XP/2003, select **Printers and Faxes**.
3. Double-click the **Samsung CLP-600 Series** icon.
4. From the **Document** menu, select **Cancel Printing** (Windows 98SE/Me) or **Cancel** (Windows NT 4.0/2000/XP/2003).

NOTE: You can access this window simply by double-clicking the printer icon at the bottom right corner of the Windows desktop.

You can also cancel the current job by pressing the **Cancel** button (⊗) on the control panel of your printer.

6 Maintaining Your Printer

This chapter provides information for maintaining your printer and the toner cartridges, as well as suggestions for high-quality and economical printing.

This chapter includes:

- **Printing a Configuration Page (CLP-600N Only)**
- **Replacing Supplies**
- **Managing Toner Cartridges**
- **Replacing Toner Cartridges**
- **Replacing the Paper Transfer Belt**
- **Replacing the Fuser Unit**
- **Cleaning the Printer**
- **Managing the Printer from the Website (CLP-600N Only)**

Printing a Configuration Page

(CLP-600N Only)

You can print a configuration page from the printer's control panel. Use the configuration page to view the current settings, to help troubleshoot problems, or to verify the installation of optional accessories, such as an optional tray.

To print a configuration page:

1. In ready mode, press the **Menu** button ( ) on the control panel.
2. When "Information" displays on the bottom line, press the **Enter** button ( ) to access the menu.
3. When "Configuration" displays on the bottom line, press the **Enter** button ( ).

   A configuration page prints out.

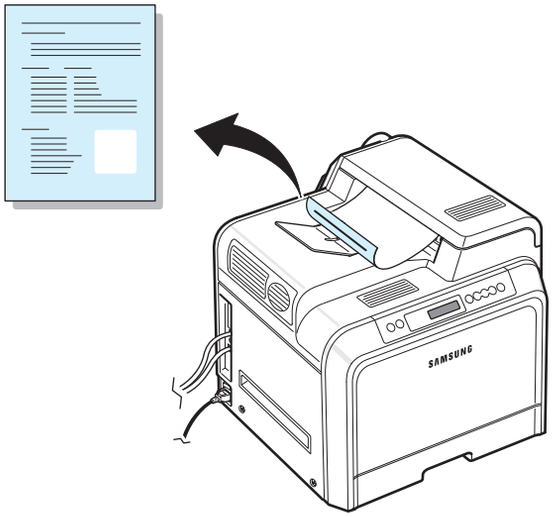

Replacing Supplies

From time to time, you need to replace the following items to maintain top performance and to avoid print quality problems and paper feed problems resulting from worn parts.

The following items should be replaced after you have printed the specified number of pages or when the life span of each item has expired. The SmartPanel program window will appear on the computer, indicating which item needs to be replaced. If you use the CLP-600N, the display on the control panel will also show an error message, indicating which item needs to be replaced. See below.

Item(s)	Printer Message (CLP-600N only)	Pages Printed	See Page
Black toner cartridge	Replace Black Toner	Approx. 4,000 pages*	6.4
Color toner cartridges	Replace [Color] Toner	Approx. 4,000 pages*	6.4
Paper transfer belt	Replace Transfer Belt	Approx. 35,000 pages**	6.5
Fuser unit	Replace Fuser	Approx. 50,000 pages	6.7
Pick-up roller	Replace MP Pick-roller OR Replace Tray 1 Pick-roller OR Replace Tray 2 Pick-roller	Approx. 50,000 pages	

* Average A4-/letter-sized page count based on 5% coverage of individual colors on each page. Usage conditions and print patterns may cause results to vary.

** The number of pages may be affected by operating environment, media type, and media size.

To purchase replacement parts, contact your Samsung dealer or the retailer where you bought your printer. We strongly recommend that items be installed by a trained service professional, except for the toner cartridges (see 6.4), the paper transfer belt (see 6.5), and the fuser unit (see 6.7).

Managing Toner Cartridges

Toner Cartridge Storage

To get the maximum results from a toner cartridge, keep the following guidelines in mind:

- Do not remove toner cartridges from their packages until you are ready to use them.
- Do not refill toner cartridges. **The printer warranty does not cover damage caused by using a refilled cartridge.**
- Store toner cartridges in the same environment as the printer.
- To prevent damage to toner cartridges, do not expose them to light for more than a few minutes.

Toner Cartridge Life Expectancy

The life of a toner cartridge depends on the amount of toner that your print jobs require. When printing text at 5% coverage, the toner cartridges last an average of 4,000 pages for black and each color. The starter toner cartridge supplied with the printer lasts an average of 2,000 pages for black and each color.

Redistributing Toner

When a toner cartridge is low on toner, faded or light areas may appear. It is also possible that colored images may be printed with incorrect colors due to flawed mixing of toner colors when one of the colored toner cartridges is low on toner. The SmartPanel program window appears on the computer telling you which color cartridge is low on toner. Also, if you use the CLP-600N, “Ready [Color] Low Toner” may appear on the display.

The printer is able to continue to print using the current toner cartridge until the SmartPanel program window appears on the computer telling you to replace the cartridge, or the control panel displays that message (CLP-600N only).

You may be able to temporarily improve print quality by redistributing the toner.

To redistribute the toner:

1 Using the handle, completely open the access door.

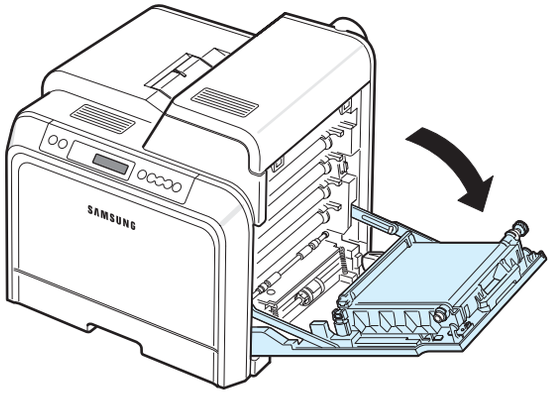

CAUTION:
- Do not touch the green surface, the OPC drum, on the front of the toner cartridge with your hands or any other material. Use the handle on each cartridge in order to avoid touching this area.
- Be careful not to scratch the surface of the paper transfer belt.
- If you leave the access door open for more than a few minutes, the OPC drum can be exposed to light. This will cause damage to the OPC drum. Close the access door should the installation need to be halted for any reason.

2 Grasp the handles on the toner cartridge and pull to remove the cartridge from the printer.

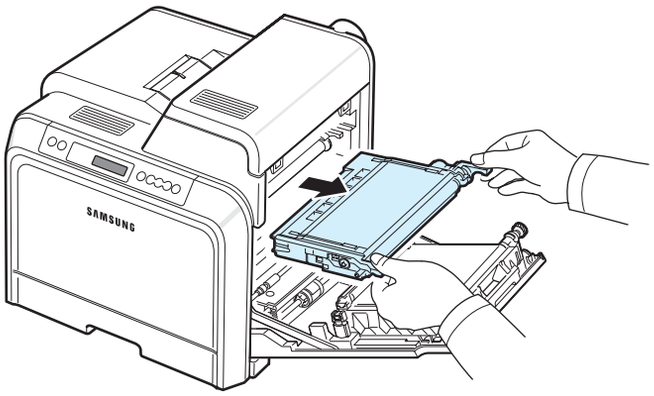

3 Holding both handles on the toner cartridge, gently rock it from side to side to redistribute the toner.

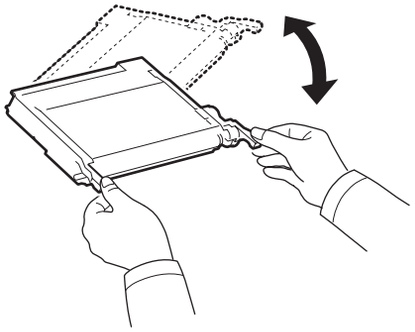

NOTE: If toner gets on your clothing, wipe it off with a dry cloth and wash it in cold water. Hot water sets toner into fabric.

4 Slide the toner cartridge back into the printer.

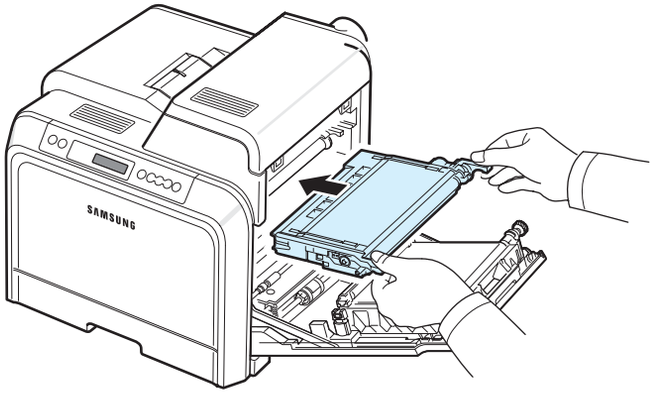

5 Close the access door. Make sure that the door is securely latched.

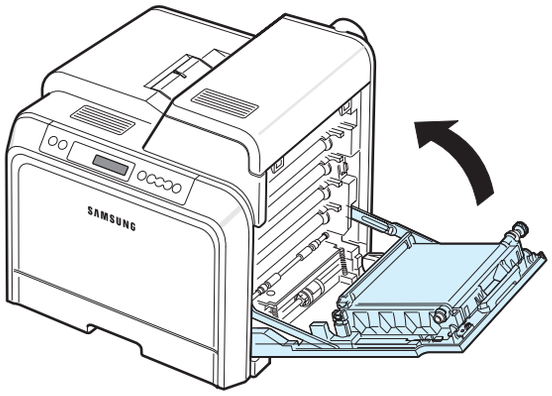

CAUTION: If the access door is not completely closed, the printer will not operate.

Replacing Toner Cartridges

The printer uses four colors and has a different toner cartridge for each one: yellow (Y), magenta (M), cyan (C), and black (K).

When the Toner LEDs, ( ) on the control panel, indicating each individual toner cartridge according to its color, turn on, the printer stops printing. Also, if you use the CLP-600N, the display on the control panel shows the error message, "[Color] Toner Empty". At this stage, replace the toner cartridge in question.

To replace the toner cartridge:

1 Turn the printer off, then wait a few minutes for the printer to cool.

2 Using the handle, completely open the access door.

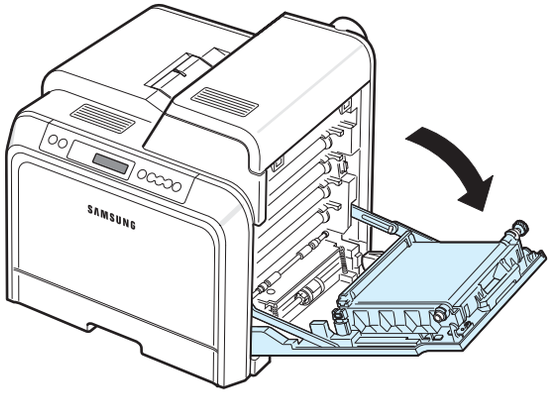

CAUTION:
- Do not touch the green surface, the OPC drum, on the front of each toner cartridge with your hands or any other material. Use the handle on each cartridge in order to avoid touching this area.
- Be careful not to scratch the surface of the paper transfer belt.
- If you leave the access door open for more than a few minutes, the OPC drum can be exposed to light. This will cause damage to the OPC drum. Close the access door should the installation need to be halted for any reason.

3 Grasp the handles on the empty toner cartridge and pull to remove the cartridge from the printer.

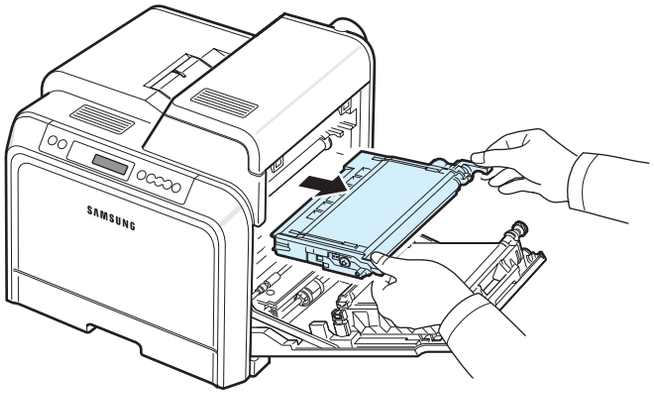

4 Take a new toner cartridge out of its package.

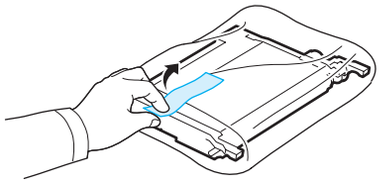

CAUTION:
- Don't use sharp objects, such as a knife or scissors, to open the toner cartridge package. You could damage the surface of the toner cartridge.
- To prevent damage, do not expose the toner cartridge to light for more than a few minutes. Cover it with a piece of paper to protect it if necessary.

5 Holding both handles on the toner cartridge, gently rock it from side to side to evenly distribute the toner.

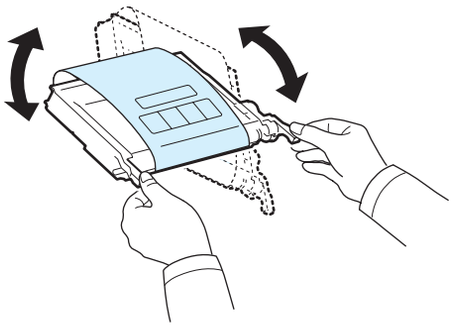

6 Place the toner cartridge on a flat surface, as shown, and remove the paper covering the toner cartridge by removing the tape.

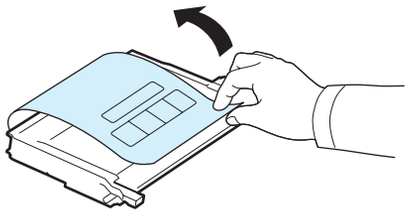

NOTE: If toner gets on your clothing, wipe it off with a dry cloth and wash it in cold water. Hot water sets toner into fabric.

7 Make sure that the color of the toner cartridge matches the color slot and then grasp the handles on the toner cartridge. Insert the cartridge until it clicks into place.

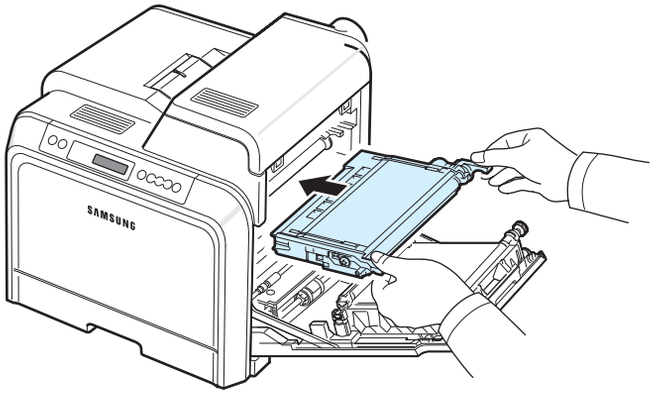

8 Close the access door. Make sure that the door is securely latched, and then turn the printer on.

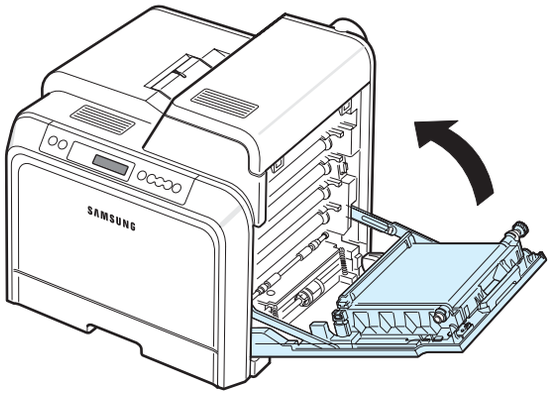

CAUTION: If the access door is not completely closed, the printer will not operate.

Replacing the Paper Transfer Belt

The life of the paper transfer belt is approximately 35,000 black and color pages. When the life span of the paper transfer belt has expired, the SamrtPanel program window appears on the computer, indicating the paper transfer belt needs to be replaced. Also, if you use the CLP-600N, the display on the control panel shows the error message, “Replace Transfer Belt”. At this stage, replace the paper transfer belt.

To replace the paper transfer belt:

1 Turn the printer off, then wait a few minutes for the printer to cool.

2 Using the handle, completely open the access door.

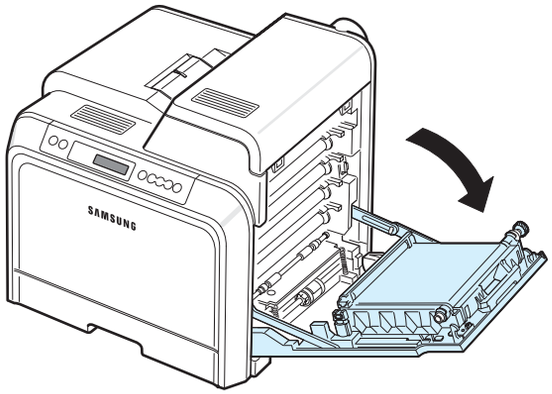

CAUTION:
- Do not touch the green surface, the OPC drum, on the front of each toner cartridge with your hands or any other material. Use the handle on each cartridge in order to avoid touching this area.
- If you leave the access door open for more than a few minutes, the OPC drum can be exposed to light. This will cause damage to the OPC drum. Close the access door should the installation need to be halted for any reason.

3 Locate the green release button on the inside of the access door (near the left side of the paper transfer belt). Press the button to release the paper transfer belt. Holding the handle on the paper transfer belt, lift it out of the printer.

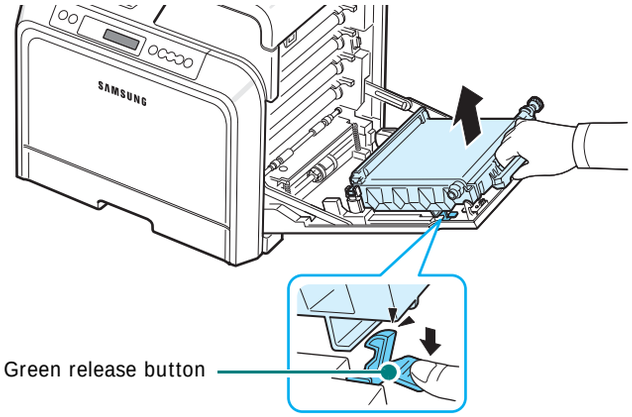

4 Take a new paper transfer belt out of its package.

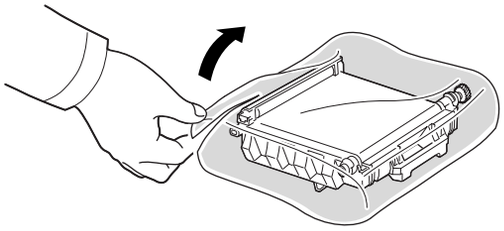

5 Remove the paper covering the paper transfer belt by removing the tape.

CAUTION:
- Don't use sharp objects, such as a knife or scissors, to open the paper transfer belt package. You could damage the surface of the paper transfer belt.
- Be careful not to scratch the surface of the paper transfer belt.

6 Holding the handle on the new paper transfer belt, align it with the slots on the inside of the access door.

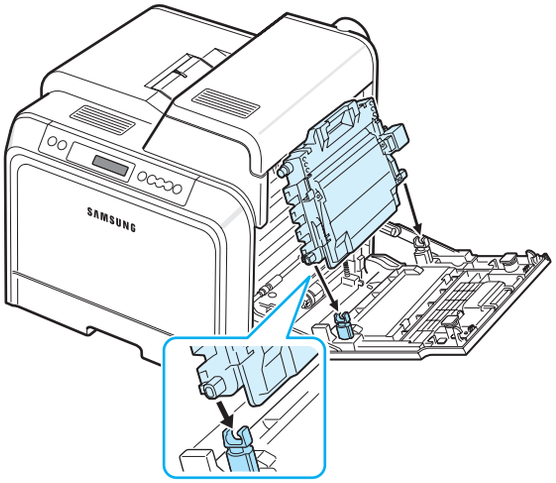

7 Push down until it clicks into place. Then lower the paper transfer belt until it is parallel with the access door and firmly seated. The green release button automatically locks the paper transfer belt.

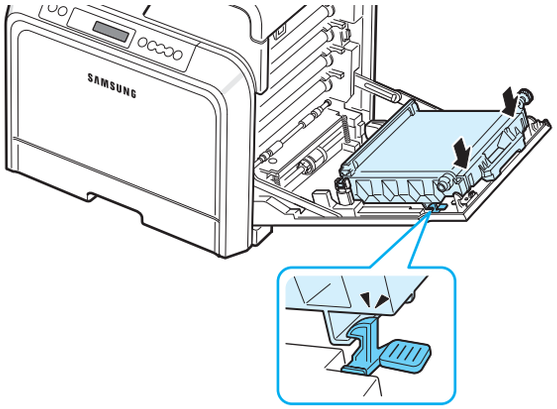

8 Close the access door firmly.

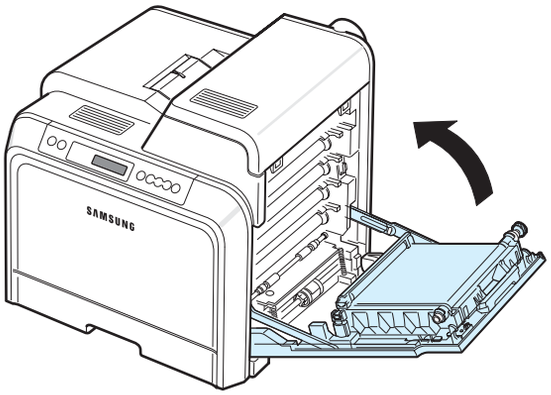

CAUTION: If the access door is not completely closed, the printer will not operate.

9 Turn the printer on.

NOTE: After replacing the paper transfer belt, your printer will automatically reset the image counter for the paper transfer belt.

Replacing the Fuser Unit

The life of the fuser unit is approximately 50,000 black and color pages. When the life span of the fuser unit has expired, the SmartPanel program window appears on the computer, indicating the fuser unit needs to be replaced. Also, if you use the CLP-600N, the display on the control panel shows the error message, “Replace Fuser”. At this stage, replace the fuser unit.

To replace the fuser unit:

1 Turn the printer off, then wait a few minutes for the printer to cool.

2 Using the handle, completely open the access door.

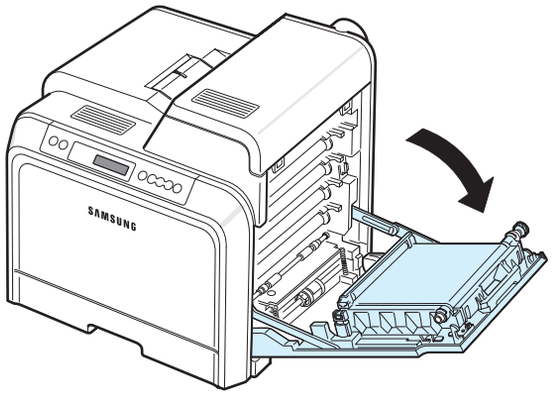

CAUTION:
- Do not touch the green surface, the OPC drum, on the front of each toner cartridge with your hands or any other material. Use the handle on each cartridge in order to avoid touching this area.
- Be careful not to scratch the surface of the paper transfer belt.
- If you leave the access door open for more than a few minutes, the OPC drum can be exposed to light. This will cause damage to the OPC drum. Close the access door should the installation need to be halted for any reason.

3 Open the top cover.

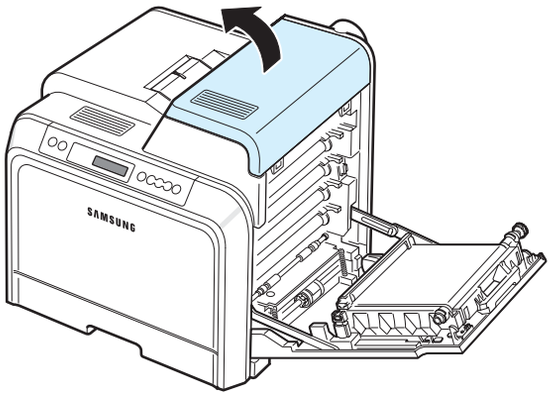

4 Using a copper coin or a screwdriver, remove the two screws on both sides of the fuser unit. Then using the handle, pull the fuser unit straight out.

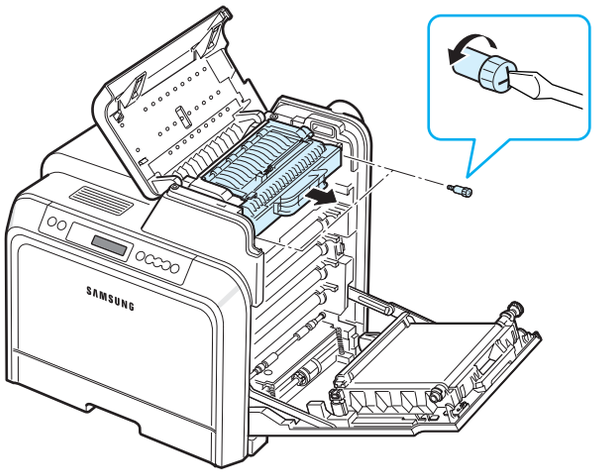

5 Unpack a new fuser unit and insert it into the printer.

6 Tighten the two screws.

7 After making sure that the access door is open, close the top cover. Make sure that it is securely latched.

8 Close the access door firmly.

CAUTION: If the top cover and access door are not completely closed, the printer will not operate.

9 Reconnect the power cord and cables and then turn the printer on.

NOTE: After replacing the fuser unit, your printer will automatically reset the image counter for the fuser unit.

Cleaning the Printer

During the printing process, particles of paper, toner, and dust can accumulate inside the printer. Over time, this build-up can cause print quality problems such as toner specks or smearing. Your printer has a cleaning mode that can correct and prevent these types of problems.

Cleaning the Outside of the Printer

Clean the printer cabinet with a soft lint-free cloth. You can dampen the cloth slightly with water, but be careful not to let any water drip onto the printer or inside of it.

CAUTION: Cleaning the printer cabinet with cleaners containing large amounts of alcohol, solvents, or other strong substances can discolor or crack the cabinet.

Cleaning the Inside of the Printer

NOTE: While cleaning the inside of the printer, be careful not to touch the transfer roller. Oil from your fingers can cause print quality problems.

1. Turn the printer off and unplug the power cord, then wait a few minutes for the printer to cool.
2. Using the handle, completely open the access door.

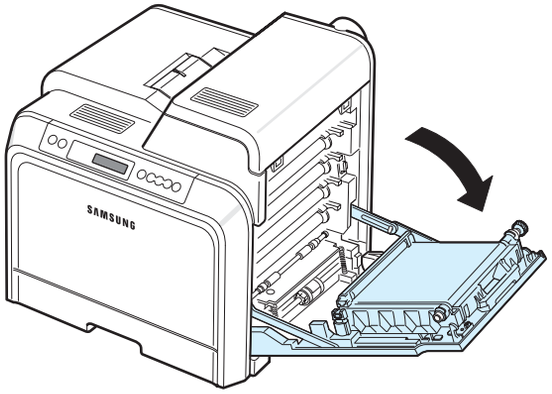

CAUTION:
- Do not touch the green surface, the OPC drum, on the front of each toner cartridge with your hands or any other material. Use the handle on each cartridge in order to avoid touching this area.
- Be careful not to scratch the surface of the paper transfer belt.
- If you leave the access door open for more than a few minutes, the OPC drum can be exposed to light. This will cause damage to the OPC drum. Close the access door should the installation need to be halted for any reason.

3. Grasp the handles on each toner cartridge and pull to remove the cartridges from the printer. Set them on a clean flat surface.

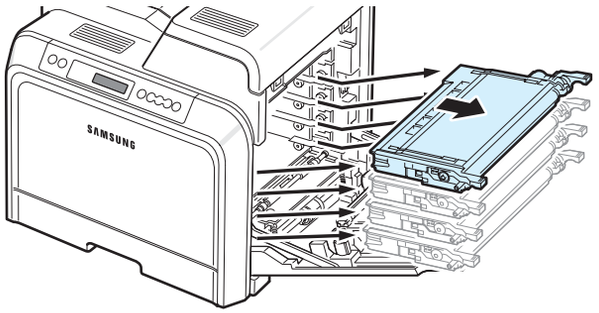

CAUTION: To prevent damage, do not expose the toner cartridges to light for more than a few minutes. Cover them with paper to protect them if necessary.

4. Look inside the printer. Remove any dust, paper particles, and spilled toner with a damp, soft lint-free cloth, or small vacuum cleaner.

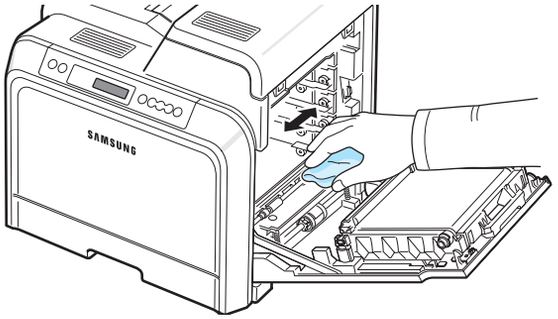

NOTE: After cleaning, allow the printer to dry completely.

5. Look inside the printer on the right and then locate the colors of the toner cartridges that match the colors of the slots.

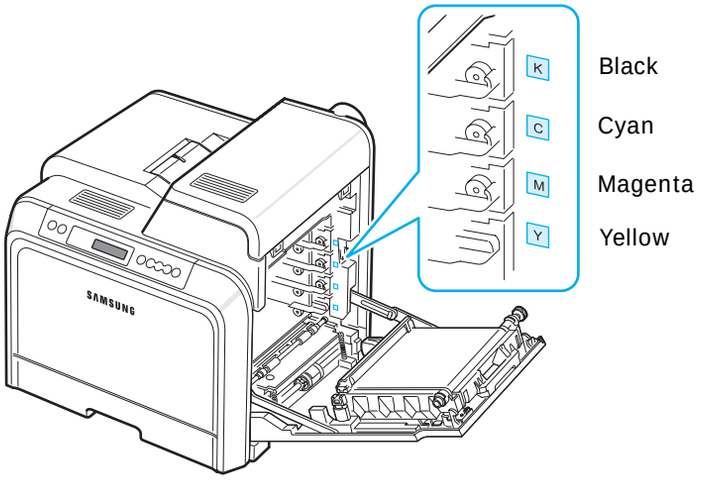

6 Grasp the handles on each toner cartridge. Align the toner cartridges with the slots inside the printer and insert them into their corresponding positions in the following order: Yellow, Magenta, Cyan, and then Black, until they click into place.

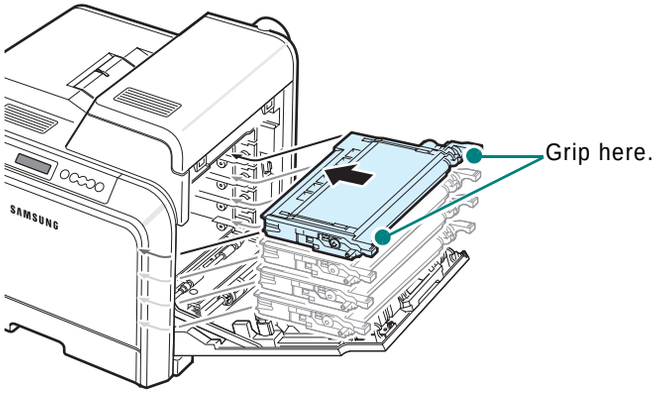

7 Close the access door. Make sure that the door is securely latched.

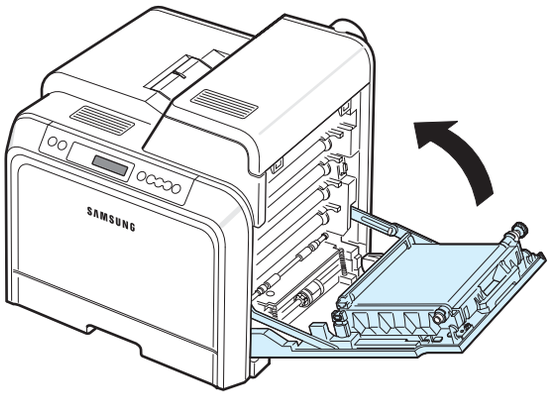

CAUTION: If the access door is not completely closed, the printer will not operate.

8 Plug the power cord in and turn the printer on.

Managing the Printer from the Website *(CLP-600N Only)*

Via your printer's website, you can set the printer to send e-mail notifications to a specified address.

To access the printer's website:

1 Start a web browser, such as Internet Explorer from Windows.

2 Enter the printer's IP address (http:// xxx.xxx.xxx.xxx) in the address field and press the **Enter** key or click **Go**.

Your printer's embedded web page opens.

Setting Up E-mail Notification

E-mail notification functionality allows your printer to send warnings or alerts to a specified address. You can also send an order for toner to a specified address. An SMTP server should be used to send these messages.

To set up the E-mail notification feature:

1 On the printer's web page, click **Machine Settings**.

2 Click **E-mail Notification Setup**.

3 Fill in the appropriate boxes.

You can set up server information, recipient list & conditions information, and the toner order system. For further details about each setting, see the following sections.

Server Information

Configure the settings for your printer to send an e-mail through the SMTP server.

The following items can be configured:

- **IP Address or Host Name**: Select IP Address or Host Name. If you select host name, you need to enter your DNS setting in TCP/IP on the **Network Settings** tab.
- **SMTP Server and Port**: Enter the SMTP server name and port number.
- **SMTP Requires Authentication**: Check if the SMTP server need to be authenticated.
- **SMTP Server Login**: Enter your login name.
- **SMTP Server Password**: Enter your login password.

- **SMTP Server Connection Timeout**: Set the time interval (30 to 120 seconds) at which the printer attempts to send e-mail from the SMTP server to the specified e-mail address.
- **Reply Address**: When the printer generates e-mail, if necessary, you can have the reply message sent to a particular e-mail address. This is where you can enter the e-mail address to which you want replies sent.

Recipient List & Conditions

Configure the e-mail options for the printer.

The following items can be configured:

- **SysAdmin E-mail Address**: Enter the e-mail address of the system administrator.
- **Key User E-mail Address**: Enter the e-mail address to which the printer should send e-mail notifications.
- **Service E-mail Address**: Enter the e-mail address of a service center or service representative.
- **Consumable Shortage Warning**: Select to whom the printer will send a warning message when approximately 10% of a consumable item remains.
- **Consumable & Printer Setup Review**: Select to whom the printer will send the message detailing the status of the printer and consumables each time the printer prints 1000 pages.
- **History**: Select to whom the printer will send a history of the replacement time of consumables, and error messages.
- **Alert**: Select to whom the printer will send recent error messages.
- **Select Notifications**: Set whether or not you want to receive each notification.

Toner Ordering System

The Toner order system allows the printer, when it senses that a toner cartridge is nearly empty, to send an order for toner to a specified address.

Configure the settings to enable the toner order system.

The following items can be configured:

- **Enable**: Select whether or not the printer sends an e-mail when it is low on toner.
- **Phone number**: Enter the Samsung dealer's or the retailer's phone number.
- **E-mail**: Enter the Samsung dealer's or the retailer's e-mail address.
- **URI**: Enter the Samsung dealer's or the retailer's URI.

Setting the Contact Information Tab

Select the **Support** tab to view and enter some information in the **Contact Information** section.

- **Name**: Enter the e-mail sender's name, such as your company's name or office designation.
- **Phone Number**: Enter a phone number to be recorded in any E-mail Notification mail.
- **Location**: Enter position information to be recorded in any E-mail Notification mail.
- **Address**: Enter the sender's e-mail address.

NOTE: It is possible that an installed firewall in the network may prevent e-mail transmission.

7 Solving Problems

This chapter provides helpful information for what to do if you encounter an error while using your printer.

This chapter includes:

- **Troubleshooting Checklist**
- **Solving General Printing Problems**
- **Clearing Paper Jams**
- **Solving Print Quality Problems**
- **Understanding Display Messages**
- **Common Windows Problems**
- **Common Macintosh Problems**
- **Common Linux Problems**

Troubleshooting Checklist

If the printer is not working properly, consult the following checklist. If the printer does not pass a step, follow the corresponding troubleshooting suggestions.

Status	Response
Make sure that the **On Line/Continue** button on the control panel is green and "Ready" is shown on the SmartPanel program window or the control panel display (CLP-600N only).	• If the button light is off, check the power cord connection. Check the power switch. Check the power source by plugging the power cord into another outlet. • If the button light is orange, check the display message and go to "Understanding Display Messages" on page 7.14.
Print a demo page to verify that the printer is feeding paper correctly. See 2.7. (CLP-600N only)	• If a demo page does not print, check the paper supply in the paper tray. • If the paper jams in the printer, go to "Clearing Paper Jams" on page 7.4. • If an error message appears on the display, go to "Understanding Display Messages" on page 7.14.
Check the demo page to see if it is printed correctly. (CLP-600N only)	If there is a print quality problem, go to "Solving Print Quality Problems" on page 7.12.
Print a short document from a software application to verify that the computer and printer are connected and are communicating correctly.	• If the page does not print, check the cable connection between the printer and the computer. • Check the print queue or print spooler to see if the printer has been paused. • Check the software application to ensure that you are using the proper printer driver and communication port. If the page is interrupted during printing, go to "Solving General Printing Problems" on page 7.2.
If completing the checklist does not resolve the printer problem, check the following troubleshooting sections.	• See "Solving General Printing Problems" on page 7.2. • See "Understanding Display Messages" on page 7.14. • See "Common Windows Problems" on page 7.16. • See "Common Macintosh Problems" on page 7.16. • See "Common Linux Problems" on page 7.16.

Solving General Printing Problems

For problems with the operation of your printer, refer to the table for suggested solutions.

Problem	Possible Cause	Solution
The printer does not print.	The printer is not receiving power.	Check the power cord connections. Check the power switch and the power source.
	The printer is not selected as the default printer.	Select **Samsung CLP-600 Series** as your default printer.
	Check the printer for the following: • The printer cover is not closed. • Paper is jammed. • No paper is loaded. • The toner cartridge is not installed.	After locating the problem, clear it. If a printer system error occurs, contact your service representative. • Close the printer cover. • Clear the paper jam. See 7.4. • Load paper. See 2.4. • Install the toner cartridge. See 2.2.
	The printer may be in manual feed mode and out of paper.	Check the message on the SmartPanel program window or the control panel display (CLP-600N *only*), add paper to the Multi-purpose Tray, and press the **On Line/Continue** button on the printer's control panel.
	The connection cable between the computer and the printer is not connected properly.	Disconnect the printer cable and reconnect it.
	The connection cable between the computer and the printer is defective.	If possible, attach the cable to another computer that is working properly and try to print a document. You can also try using a different printer cable.
	The port setting is incorrect.	Check the Windows printer setting to make sure that the print job is sent to the correct port. If the computer has more than one port, make sure that the printer is attached to the correct one.
The printer does not print. (continued)	The printer may be configured incorrectly.	Check the printer properties to ensure that all of the print settings are correct.
	The printer driver may be incorrectly installed.	Reinstall the printer driver; see the **Software User's Guide**. Try printing a demo page.
	The printer is malfunctioning.	Check the display message on the control panel to determine if the printer is indicating a system error.
The printer selects print materials from the wrong paper source.	The paper source selection in the printer properties may be incorrect.	For many software applications, the paper source selection is found under the **Paper** tab within the printer properties window. Select the correct paper source. For details, see the **Software User's Guide**.
Paper does not feed into the printer.	Paper has been loaded incorrectly.	Remove paper from the tray and reload it correctly. Check that the paper size adjusters are set correctly.
	There is too much paper in the paper tray.	Remove excess paper from the tray.
	The paper is too thick.	Use only paper that meets printer specifications.
A print job is extremely slow.	The job may be very complex.	Reduce the complexity of the page(s) or try adjusting the print quality settings. Adjust the print quality settings, such as reducing the resolution. If you have set the resolution to **Best**, change it to **Normal** or **Draft**. See the **Software User's Guide.** Change the port setting to the USB or network port to improve print speed. Your printer prints A4-sized paper at 20 ppm and letter-sized paper at 21 ppm.
	If using Windows 98SE/Me, the Spooling Setting may be set incorrectly.	From the **Start** menu, choose **Settings** and **Printers**. Right-click the **Samsung CLP-600 Series** printer icon, choose **Properties**, click the **Details** tab, and then choose the **Spool Settings** button. Select the desired spool setting.

Problem	Possible Cause	Solution
Half the page is blank.	The page orientation setting may be incorrect.	Change the page orientation in your application. For details, see the **Software User's Guide**.
	The paper size and the paper size settings do not match.	Ensure that the paper size in the printer driver settings matches the paper in the tray. Or, ensure that the paper size in the printer driver settings matches the paper selection in the software application settings you use.
The paper keeps jamming.	There is too much paper in the paper tray.	Remove excess paper from the tray. If printing on special materials, use the Multi-purpose Tray. Check that the paper size adjusters are set correctly.
	An incorrect type of paper is being used.	Use only paper that meets printer specifications. If printing on special materials, use the Multi-purpose Tray.
	There may be debris inside the printer.	Open the access door and remove the debris.
The printer prints, but the text is wrong, garbled, or incomplete.	The printer cable is loose or defective.	Disconnect and reconnect the printer cable. Try a print job that you have already printed successfully. If possible, attach the cable and printer to another computer and try a print job that you know works. Finally, try a new printer cable.
	The wrong printer driver was selected.	Check the application's printer selection menu to ensure that your printer is selected.
	The software application is malfunctioning.	Try printing a job from another application.
	The operating system is malfunctioning.	Exit Windows and reboot the computer. Turn the printer off and then back on again.

Problem	Possible Cause	Solution
Pages print, but are blank.	The toner cartridge is defective or out of toner.	Redistribute the toner. If necessary, see page 6.2. If necessary, replace the toner cartridge.
	The file may have blank pages.	Check the file to ensure that it does not contain blank pages.
	Some parts, such as the controller or the board, may be defective.	Contact a service representative.
When you are using Windows 98SE, the illustrations print incorrectly from Adobe Illustrator.	The setting in the software application is wrong.	Select **Download as Bit Image** in the **Advanced Options** window of the graphic properties window. Print the document again.
The print quality of photos is not good. Images are not clear.	The resolution is set to **Normal** or **Draft**.	Change the resolution to **Best** and then try to print again.
	The resolution of the photo is very low.	If you increase the photo size in the software application, the resolution will be reduced. Reduce the photo size.
Your printer has an odd smell during initial use.	The oil used to protect the fuser is evaporating.	After printing about 100 color pages, there will be no more smell. It is a temporary issue.

Clearing Paper Jams

NOTE: When removing paper that is jammed in the printer, if possible always pull the paper in the direction that it normally moves so as not to damage internal components. Always pull firmly and evenly; do not jerk the paper. If the paper tears, ensure that all fragments of paper are removed; otherwise a jam will occur again.

When a paper jam occurs, a lamp turns on at the corresponding location on the Status map of the control panel. If you use the CLP-600N, the display on the control panel also tells you where the paper jam has occurred. Refer to the table below to locate the paper jam and to clear it:

LED on Status Map	Message (CLP-600N only)	Location of Jam	GoTo
	Jam0 In Tray1	In the paper feed area	page 7.4
	Jam0 In MP Tray	In the multi-purpose tray	page 7.5
	Jam Inside Printer	Inside printer	page 7.6
	Jam In Exit Area	In the paper exit area	page 7.7
	Jam0 In Tray2	In the optional tray 2	page 7.8

To resume printing after clearing paper jams, you must open and close the access door.

In the Paper Feed Area

If paper is jammed in the paper feed area, a lamp turns on at the corresponding location on the Status map. If you use the CLP-600N, “Jam0 In Tray1” also appears on the display.

1 Using the handle, completely open the access door.

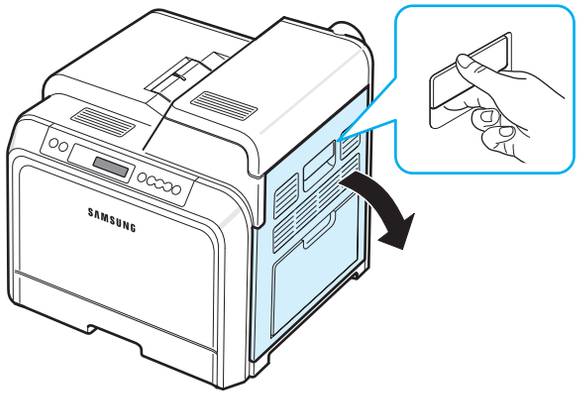

2 Carefully remove the paper by pulling in the direction as shown below. Go to step 6.

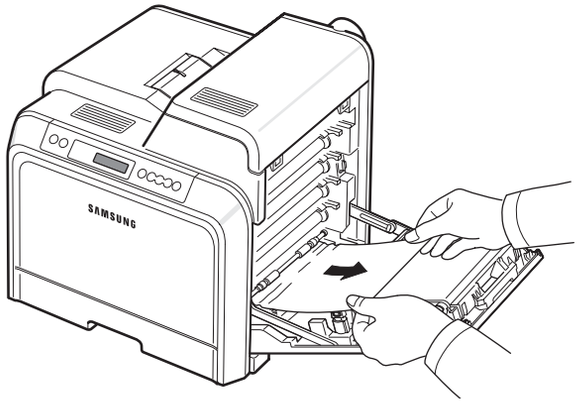

If you cannot find the jammed paper, or if there is any resistance removing the paper, stop pulling, and go to step 3.

CAUTION:
- Do not touch the green surface, the OPC drum, on the front of each toner cartridge with your hands or any other material. Use the handle on each cartridge in order to avoid touching this area.
- Be careful not to scratch the surface of the paper transfer belt.
- If you leave the access door open for more than a few minutes, the OPC drum can be exposed to light. This will cause damage to the OPC drum. Close the access door should the installation need to be halted for any reason.

3 Pull the tray open. After you pull it all the way out, lift up the front part of the tray slightly to release the tray from the printer.

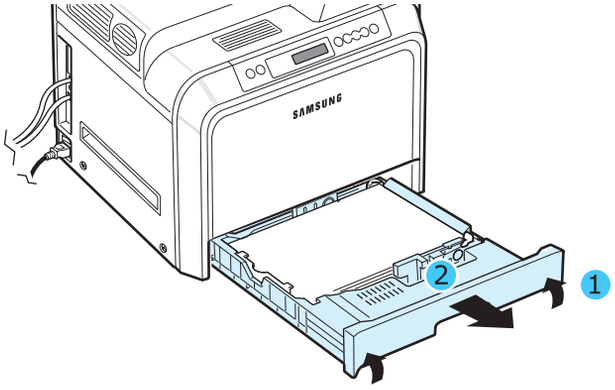

4 Remove the jammed paper by gently pulling it straight out as shown below.

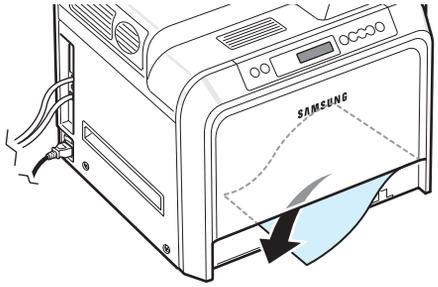

5 To replace the tray, lower the rear edge, align it with the slot, and slide it into the printer.

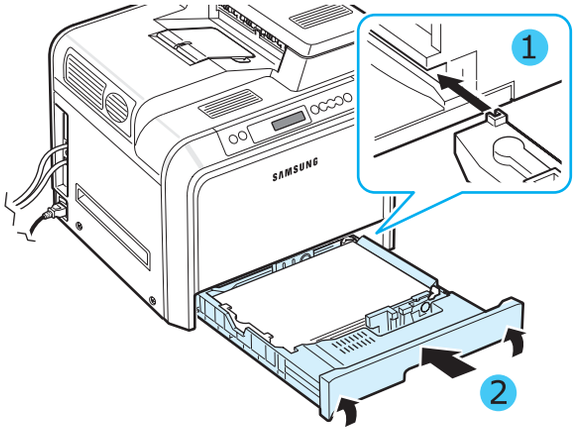

6 After removing the jammed paper, check for paper which may be jammed in other parts of the printer.

7 Close the access door firmly. The printer will resume printing.

CAUTION: If the access door is not completely closed, the printer will not operate.

In the Multi-purpose Tray

When you print using the Multi-purpose Tray and the printer detects that there is either no paper or the paper has been improperly loaded, a lamp turns on at the corresponding location on the Status map. If you use the CLP-600N, “Jam0 In MP Tray” also appears on the display.

1 If the paper is not feeding properly, using the handle, completely open the access door.

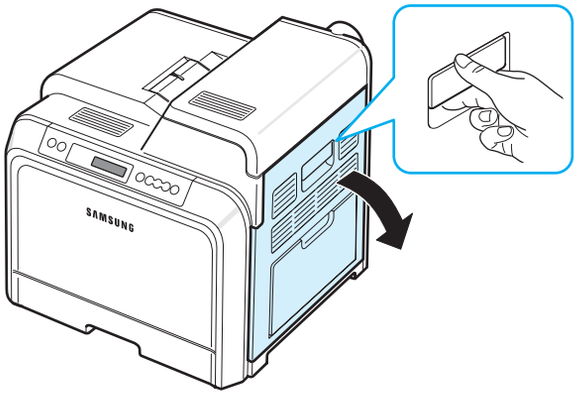
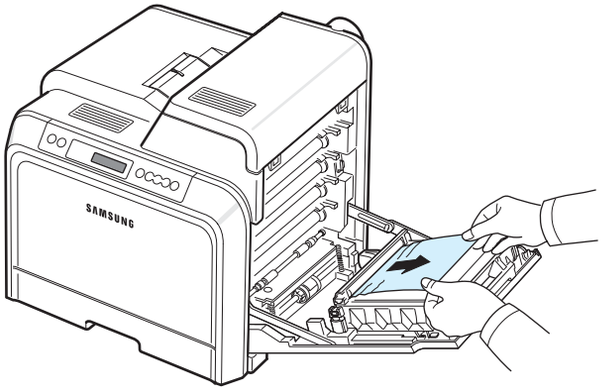
2 Remove the jammed paper by pulling in the direction shown. To avoid tearing the paper, pull it out gently and slowly.