CAUTION:
- Do not touch the green surface, the OPC drum, on the front of each toner cartridge with your hands or any other material. Use the handle on each cartridge in order to avoid touching this area.
- Be careful not to scratch the surface of the paper transfer belt.
- If you leave the access door open for more than a few minutes, the OPC drum can be exposed to light. This will cause damage to the OPC drum. Close the access door should the installation need to be halted for any reason.

3 Close the access door firmly. The printer will resume printing.

CAUTION: If the access door is not completely closed, the printer will not operate.

Inside the Printer

If paper is jammed inside the printer, a lamp turns on at the corresponding location on the Status map. If you use the CLP-600N, “Jam Inside Printer” also appears on the display.

1 Using the handle, completely open the access door.

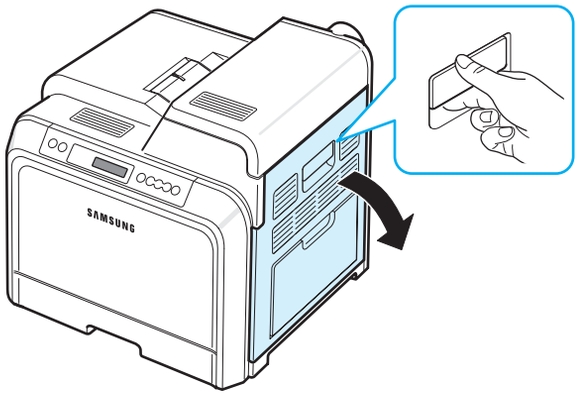

2 Open the top cover.

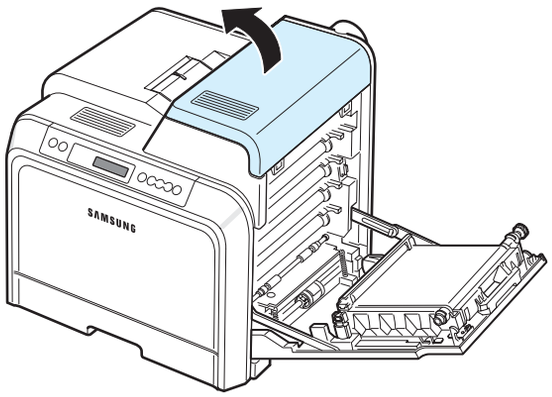

3 Holding the inner cover open, carefully take the jammed paper out of the printer. The inner cover will then close automatically.

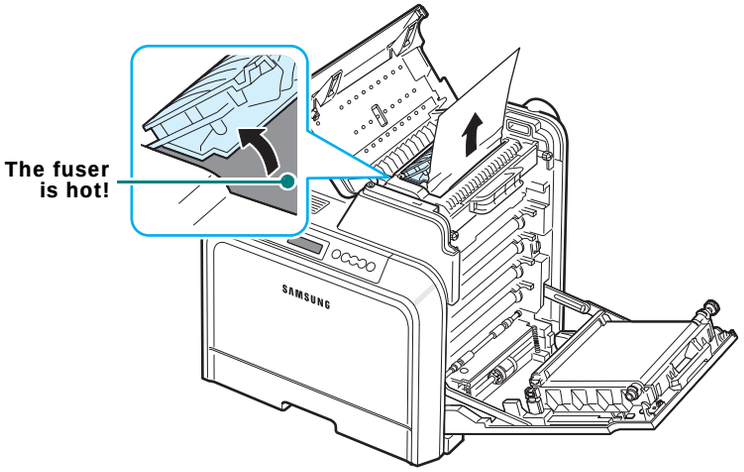

CAUTION:
- Do not touch the fuser inside the inner cover. It is hot and could cause burns! The fuser’s operating temperature is 180°C (356°F). Take care when removing paper from the printer.
- Do not touch the green surface, the OPC drum, on the front of each toner cartridge with your hands or any other material. Use the handle on each cartridge in order to avoid touching this area.
- Be careful not to scratch the surface of the paper transfer belt.
- If you leave the access door open for more than a few minutes, the OPC drum can be exposed to light. This will cause damage to the OPC drum. Close the access door should the installation need to be halted for any reason.

4 After removing the jammed paper, check for paper which may be jammed in other parts of the printer.

5 After making sure that the access door is open, close the top cover. Make sure that it is securely latched.

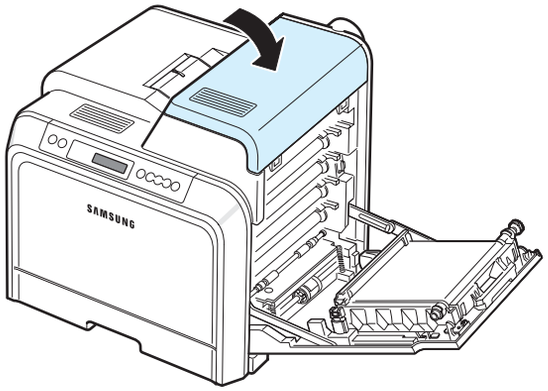

6 Close the access door firmly. The printer will resume printing.

CAUTION: If the top cover and access door are not completely closed, the printer will not operate.

In the Paper Exit Area

If paper is jammed in the paper exit area, a lamp turns on at the corresponding location on the Status map. If you use the CLP-600N, “Jam In Exit Area” also appears on the display.

1 If a long portion of the paper is visible, pull it straight out. Open and close the access door firmly. The printer will resume printing.

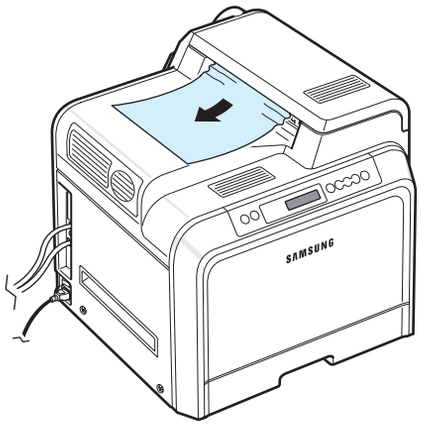

If you cannot find the jammed paper, or if there is any resistance removing the paper, stop pulling and go to step 2.

2 Using the handle, completely open the access door.

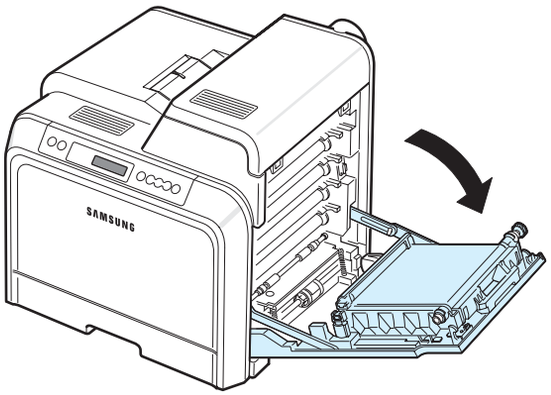

CAUTION:
- Do not touch the green surface, the OPC drum, on the front of each toner cartridge with your hands or any other material. Use the handle on each cartridge in order to avoid touching this area.
- Be careful not to scratch the surface of the paper transfer belt.
- If you leave the access door open for more than a few minutes, the OPC drum can be exposed to light. This will cause damage to the OPC drum. Close the access door should the installation need to be halted for any reason.

3 Open the top cover.

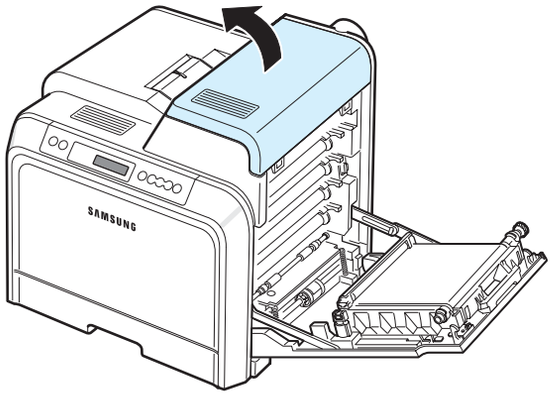

4 Holding the inner cover open, carefully take the jammed paper out of the printer. The inner cover will then close automatically.

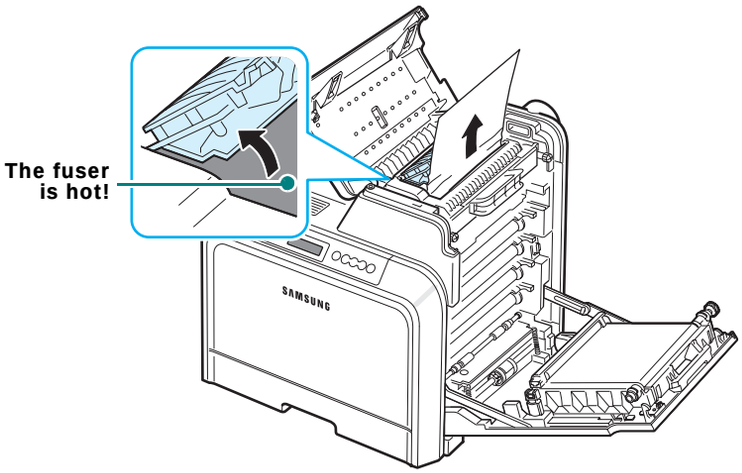

CAUTION: Do not touch the fuser inside the inner cover. It is hot and could cause burns! The fuser’s operating temperature is 180°C (356°F). Take care when removing paper from the printer.

5 After removing the jammed paper, check for paper which may be jammed in other parts of the printer.

6 After making sure that the access door is open, close the top cover. Make sure that it is securely latched.

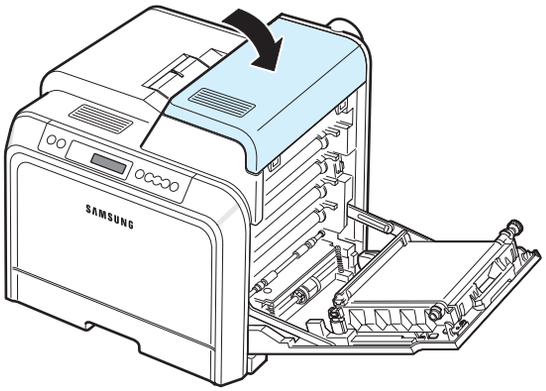

7 Close the access door firmly. The printer will resume printing.

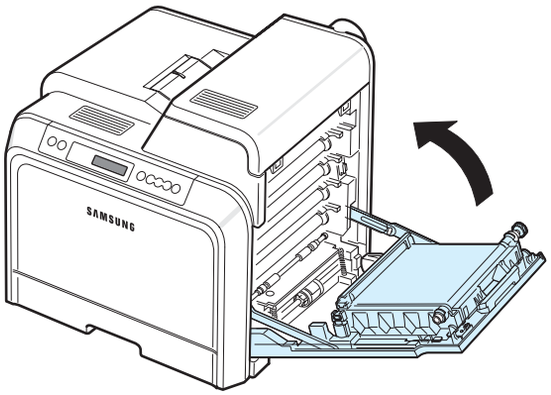

CAUTION: If the top cover and access door are not completely closed, the printer will not operate.

In the Optional Tray2

If paper is jammed in the optional tray 2, a lamp turns on at the corresponding location on the Status map. If you use the CLP-600N, “Jam0 In Tray2” also appears on the display.

1 Using the handle, completely open the access door.

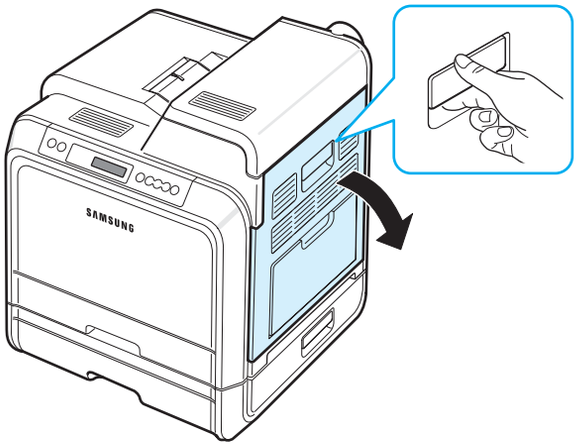

2 Open the top cover.

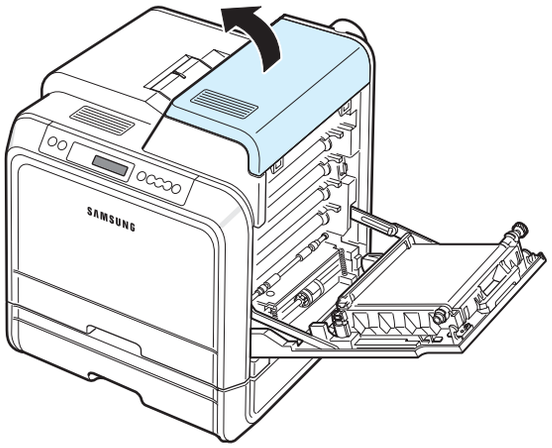

3 Holding the inner cover open, carefully take the jammed paper out of the printer. The inner cover will then close automatically. Go to step 12.

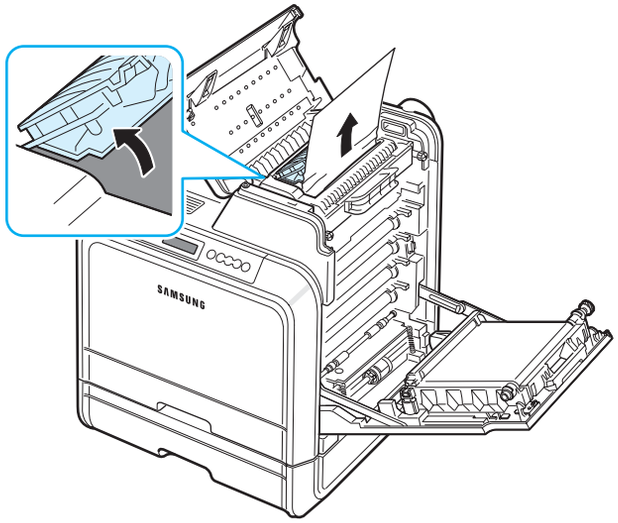

If you cannot find the jammed paper, or if there is any resistance removing the paper, stop pulling and close the access door. Go to step 4.

CAUTION:
- Do not touch the fuser inside the inner cover. It is hot and could cause burns! The fuser's operating temperature is 180°C (356°F). Take care when removing paper from the printer.
- Do not touch the green surface, the OPC drum, on the front of each toner cartridge with your hands or any other material. Use the handle on each cartridge in order to avoid touching this area.
- Be careful not to scratch the surface of the paper transfer belt.
- If you leave the access door open for more than a few minutes, the OPC drum can be exposed to light. This will cause damage to the OPC drum. Close the access door should the installation need to be halted for any reason.

4 Open the outer jam cover in Tray 2.

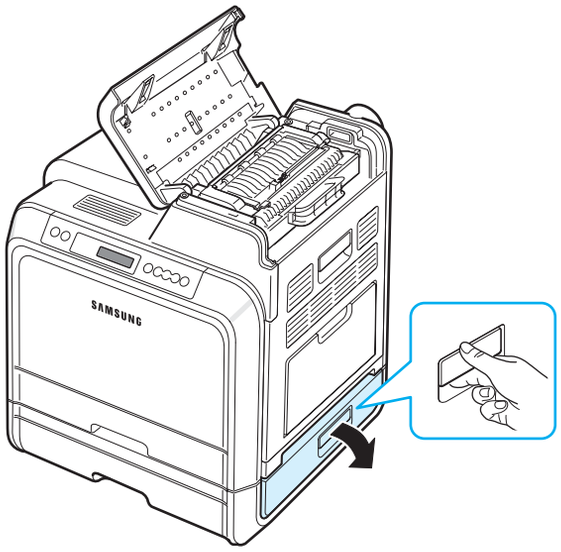

5 Open the inner cover of Tray 2.

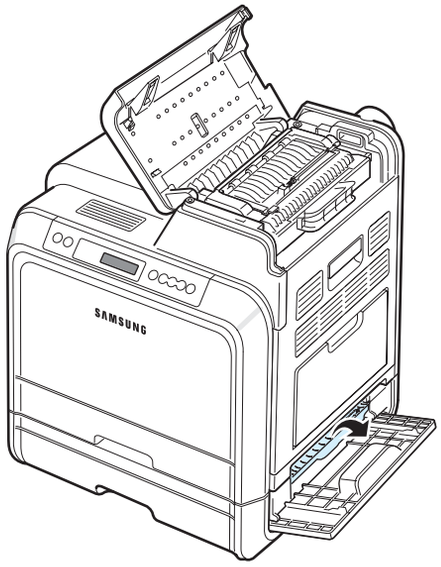

6 Pull the jammed paper out in the direction shown. To avoid tearing the paper, pull it out gently and slowly.

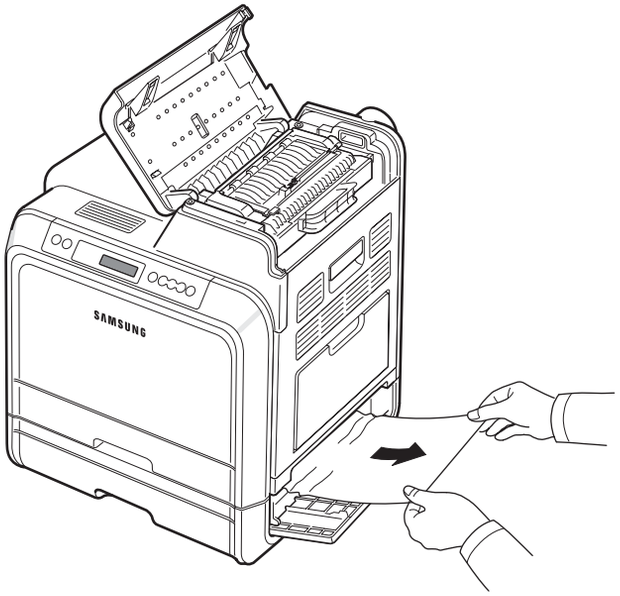

7 Close the two jam covers and go to step 11.

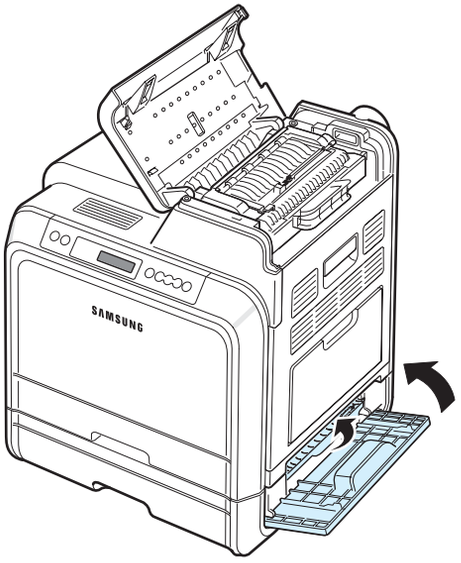

If you cannot find the jammed paper, or if there is any resistance removing the paper, stop pulling and continue to step 8.

8 Pull the optional tray 2 open. After you pull it all the way out, lift up the front part of the tray slightly to release the tray from the printer.

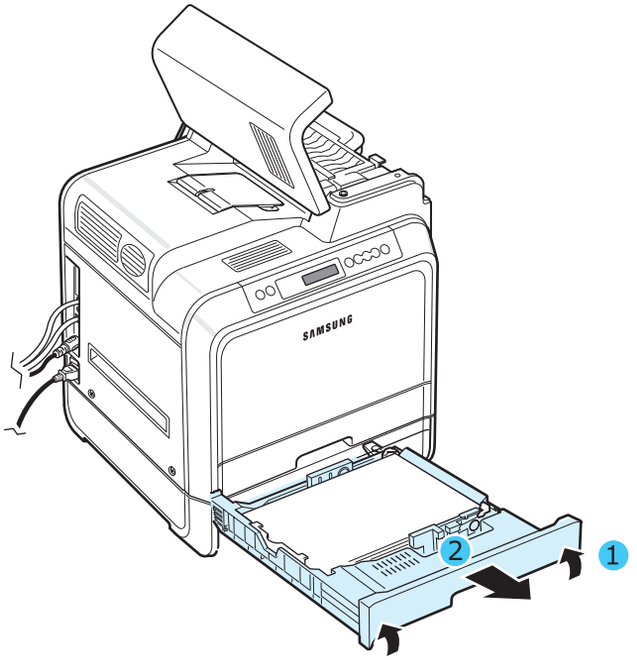

9 If you see the jammed paper, remove the paper from the printer by gently pulling it straight out as shown below.

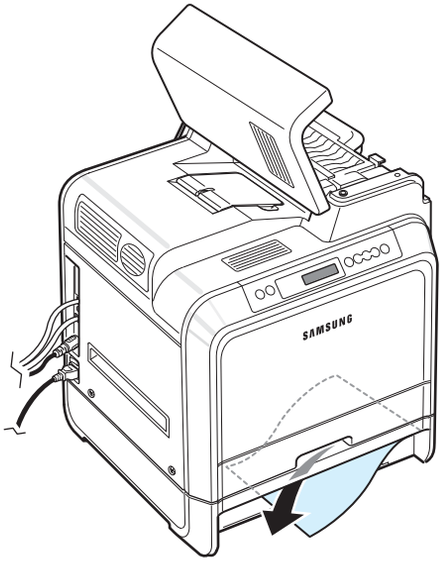

10 Slide the tray back into the printer and close the two jam covers.

11 Open the access door.

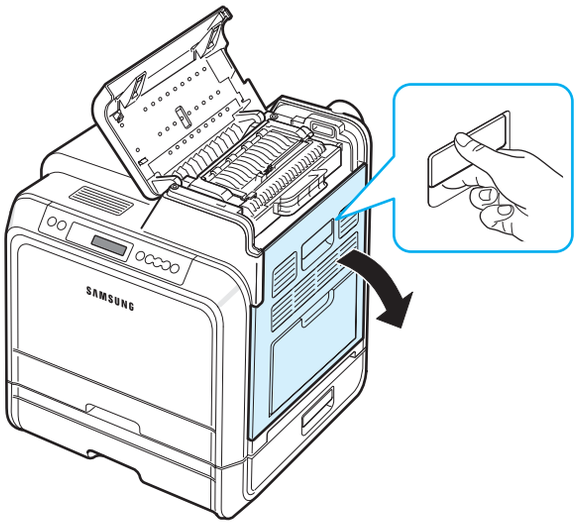

12 After making sure that the access door is open. Close the top cover.

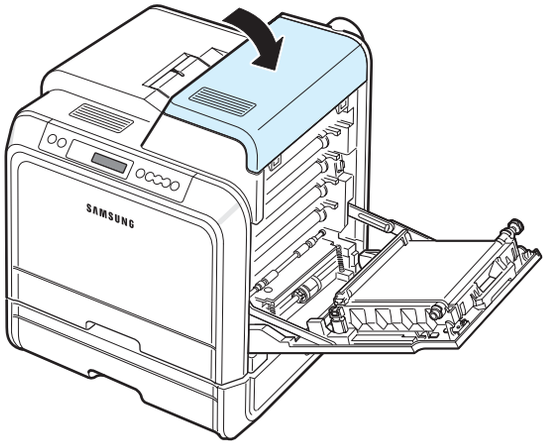

13 Close the access door firmly. The printer will resume printing.

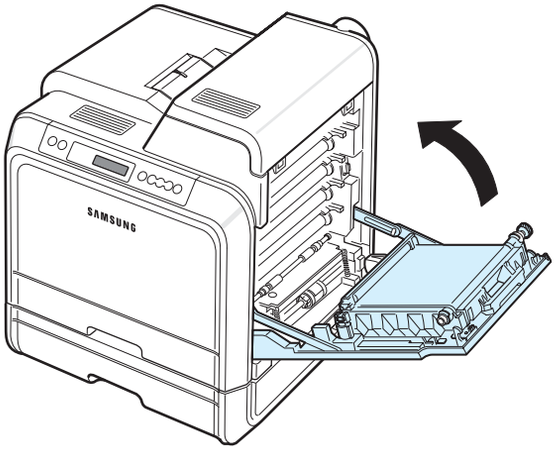

CAUTION: If the top cover and access door are not completely closed, the printer will not operate.

Tips for Avoiding Paper Jams

By selecting the correct paper types, most paper jams can be avoided. If a paper jam occurs, follow the steps outlined in "Clearing Paper Jams" on page 7.4.

- Follow the procedures on page 4.2. Ensure that the adjustable guides are positioned correctly.
- Do not overload the paper tray.
- Do not remove the paper from the tray while printing.
- Flex, fan, and straighten the paper before loading.
- Do not use creased, damp, or highly curled paper.
- Do not mix paper types in a tray.
- Use only recommended print materials. See "Paper Specifications" on page 10.1.
- Ensure that the recommended print side of print materials is facing up in the paper tray and facing down in the Multi-purpose Tray.

Solving Print Quality Problems

Dirt inside of the printer or improper paper loading may reduce print quality. See the table below to troubleshoot problems.

Problem	Solution
Light or faded print	If a vertical white streak or faded area appears on the page: • The toner supply is low. You may be able to temporarily extend the toner cartridge life. See “Redistributing Toner” on page 6.2. If this does not improve print quality, install a new toner cartridge. • The paper may not meet paper specifications (for example, the paper is too moist or too rough). See “Paper Specifications” on page 10.1. • A combination of faded or smeared defects may indicate that the printer needs cleaning. See page 6.8.
Toner specks	The paper may not meet specifications (for example, the paper is too moist or too rough). See “Paper Specifications” on page 10.1.
Dropouts	If generally rounded, faded areas occur randomly on the page: • A single sheet of paper may be defective. Try reprinting the job. • The moisture content of the paper is uneven or the paper has moist spots on its surface. Try a different brand of paper. See “Paper Specifications” on page 10.1. • The paper lot is bad. The manufacturing process can cause some areas to reject toner. Try a different kind or brand of paper. • The toner cartridge may be defective. See “Vertical repetitive defects” on the next column. • If these steps do not correct the problems, contact a service representative.
Vertical lines	If black vertical streaks appear on the page: • A toner cartridge has probably been scratched. Remove the toner cartridge and install a new one. See page 6.4. If white vertical lines appear on the page: • Clean the inside of the printer. See “Cleaning the Inside of the Printer” on page 6.8. If you still have the same problems, replace the toner cartridge with a new one. See page 6.4.

Problem	Solution
Color or Black background	If the amount of background shading becomes unacceptable, the procedures below may fix the problem. • Change to lighter weight paper. See “Paper Specifications” on page 10.1. • Check the printer's environment; very dry (low humidity) or high humidity (higher than 80% RH) conditions can increase the amount of background shading. • Remove one of the old toner cartridges and install a new one.
Toner smear	• Clean the inside of the printer. See “Cleaning the Inside of the Printer” on page 6.8 • Check the paper type and quality. See “Paper Specifications” on page 10.1. • Remove the paper transfer belt and install a new one. See “Replacing the Paper Transfer Belt” on page 6.5.
Vertical repetitive defects	If marks repeatedly appear on the printed side of the page at even intervals: • Clean the inside of the printer. See “Cleaning the Inside of the Printer” on page 6.8. After cleaning the inside of the printer, if you still have the same problems, install a new toner cartridge of the problem color. See “Replacing Toner Cartridges” on page 6.4. • Parts of the printer may have toner on them. If the defects occur on the back of the page, the problem will likely correct itself after a few more pages. • The fusing assembly may be damaged. Contact a service representative.
Background scatter	Background scatter results from bits of toner distributed on the printed page. • The paper may be too damp. Try printing with a different batch of paper. Do not open packages of paper until necessary so that the paper does not absorb too much moisture. • If background scatter occurs on an envelope, change the printing layout to avoid printing over areas that have overlapping seams on the reverse side. Printing on seams can cause problems. • If background scatter covers the entire surface area of a printed page, adjust the print resolution through your software application or via the printer properties window.

Problem	Solution
Misformed characters	• If characters are improperly formed and producing hollowed images, the paper stock may be too slick. Try a different paper. See “Paper Specifications” on page 10.1. • If characters are improperly formed and producing a wavy effect, the scanner unit may need service. Verify that it also occurs on a demo page. See page 2.7. For service, contact a service representative.
Page skew	• Ensure that the paper is loaded properly. • Check the paper type and quality. See “Paper Specifications” on page 10.1. • Ensure that the paper or other material is loaded correctly and the guides are not too tight or too loose against the paper stack.
Curl or wave	• Ensure that the paper is loaded properly. • Check the paper type and quality. Both high temperature and high humidity can cause paper curl. See “Paper Specifications” on page 10.1. • Turn the stack of paper over in the tray. Also try rotating the paper 180° in the tray.
Wrinkles or creases	• Ensure that the paper is loaded properly. • Check the paper type and quality. See “Paper Specifications” on page 10.1. • Turn the stack of paper over in the paper tray. Also try rotating the paper 180° in the tray.
Back of printouts are dirty	• The transfer roller may be dirty. See “Cleaning the Inside of the Printer” on page 6.8. • Check for leaking toner. Clean the inside of the printer.

Problem	Solution
Solid Color or Black pages	• The toner cartridge may not be installed properly. Remove the toner cartridge and reinsert. • The toner cartridge may be defective and need replacing. Install a new toner cartridge. • The printer may require repair. Contact a service representative.
Loose toner	• Clean the inside of the printer. • Check the paper type and quality. See “Paper Specifications” on page 10.1. • Install a new toner cartridge. See “Replacing Toner Cartridges” on page 6.4. • If the problem persists, the printer may require repair. Contact a service representative.
Character Voids	Character voids are white areas within characters that should be solid black: • You may be printing on the wrong surface of the paper. Remove the paper and turn it over. • The paper may not meet paper specifications. See page 10.1.
Horizontal stripes	If horizontally aligned color or black streaks or smears appear: • A toner cartridge may be installed improperly. Remove the toner cartridge and reinsert. • A toner cartridge may be defective. Install a new toner cartridge. • If the problem persists, the printer may require repair. Contact a service representative.
Curl	If the printed paper is curled or paper does not feed into the printer: • Turn the stack of paper over in the paper tray. Also try rotating the paper 180° in the tray.

Understanding Display Messages

Messages appear on the SmartPanel program window or the control panel display (CLP-600N only) to indicate the printer's status or errors. Refer to the tables below to understand the messages' meanings and correct the problem if necessary. Messages and their meanings are listed in alphabetical order.

NOTE: When you call for service, it is very helpful to tell the service representative the display message.

Message	Status	Do this...
ACR Calibration	During auto color registration, a system error occurs so that the registration fails or does not run.	Contact a service representative.
ADC Not Confirm Error	A problem has occurred in the ADC in the printer.	Contact a service representative.
Adjust Photo LED	During auto color registration, the printer does not recognize the photo LED in the paper transfer belt assembly.	Contact a service representative.
Cover Open	The top cover or access door is open.	Close the top cover or access door firmly.
[Color] Toner Empty	The corresponding toner cartridge in your printer is empty and the printer does not operate.	Replace the corresponding toner cartridge with a new one. See page 6.4.
Engine Fuser Low Heat Error	The temperature in the fuser is abnormally low.	Unplug the power cord and plug it in again. If the problem persists, call for service.
Engine Fuser Over Heat Error	The temperature in the fuser is abnormally high.	Unplug the power cord and plug it in again. If the problem persists, call for service.
Engine LSU Error	A problem has occurred in the LSU (Laser Scanning Unit) in the printer.	Unplug the power cord and plug it in again. If the problem persists, call for service.
Install [Color] Toner	The indicated color toner cartridge is not installed in the printer.	Install the corresponding color toner cartridge.
Install Transfer Belt	The paper transfer belt is not installed in the printer.	Install the paper transfer belt.
Invalid Toner [Color]	An invalid toner cartridge has been installed.	Only install Samsung-approved toner cartridges, designed for your printer. If you have installed an approved toner cartridge and this error still occurs, contact an authorized service agent.
Invalid Transfer Belt	An invalid paper transfer belt has been installed.	Only install Samsung-approved paper transfer belts, designed for your printer. If you have installed an approved paper transfer belt and this error still occurs, contact an authorized service agent.
Jam0 In Tray1 Jam0 In Tray2 Jam0 In MP Tray	A paper jam has occurred in or near the indicated tray.	Remove the jammed paper from the corresponding tray, referring to page 7.4.
Jam In Exit Area	A paper jam has occurred in the paper exit area.	Remove the jammed paper from the printer, referring to page 7.7.
Jam Inside Printer	A paper jam has occurred inside the printer.	Open the access door and remove the jammed paper from the printer, referring to page 7.6.
Load [Size] In Tray1 Load [Size] In Tray2 Load [Size] In MP	The paper size specified in the printer properties does not match the paper you are loading.	Load the correct paper in the tray.
Low Density	The amount of the toner which is spread on the paper transfer belt for adjusting auto color registration is very small, so that the printer does not recognize the toner during auto color registration.	Replace the toner cartridge(s) with a new one. See page 6.4. If you still have the same problem, contact a service representative.

Message	Status	Do this...
Main Motor Error	A problem has occurred in the development motor of the printer.	Unplug the power cord and plug it in again. If the problem persists, call for service.
Memory Overflow	The printer does not have enough memory to print the current job. An error has occurred in the firmware program of the printer.	The job automatically clears and the printer returns to Standby Mode.
Paper Empty [Size] In Tray1 Paper Empty [Size] In Tray2 Paper Empty [Size] In Mp Paper Empty [Size] In Manual	The paper tray has run out of paper.	Load paper in the paper tray. See page 4.2.
Press Continue Button	The printer is waiting for the user's action before printing from the Multi-purpose Tray using the manual feed mode.	Load a sheet of print material and press the **On Line / Continue** button. You need to press the button for each page.
Ready [Color] Low Toner	The corresponding toner cartridge in your printer is low on toner.	Redistribute the toner in the corresponding toner cartridge, referring to page 6.2.
Ready IP Conflict	The IP address of the printer conflicts with other devices on the network.	Contact your network administrator and choose an address within your subnet which will not conflict with any other devices.
Replace [Color] Toner	The corresponding toner cartridge in your printer is nearly empty. However, the printer continues printing, even though print quality is not optimal.	If necessary, replace the corresponding toner cartridge with a new one. See page 6.4.
Replace Fuser	The life span of the fuser unit has expired.	Replace the fuser unit with a new one. See page 6.7.

Message	Status	Do this...
Replace Fuser Soon	The life span of the fuser unit will expire soon.	When "Replace Fuser" appears on the display, replace the fuser unit.
Replace MP Pick-roller	The life span of the MP pickup roller has expired.	Contact a service representative.
Replace Transfer Belt	The life span of the paper transfer belt has expired.	Replace the paper transfer belt with a new one. See page 6.5.
Replace Transfer Belt Soon	The life span of the paper transfer belt will expire soon.	When "Replace Transfer Belt" appears on the display, replace the paper transfer belt.
Replace Tray1 Pick-roller	The life span of the Tray1 pickup roller has expired.	Contact a service representative.
Replace Tray2 Pick-roller	The life span of the Tray2 pickup roller has expired.	Contact a service representative.
Tray2 Error	The optional tray 2 is not properly installed or connected to the printer.	After turn the printer off and then back on, reinstall the optional tray 2. If the message persists, contact a service representative.
Tray 2 Jam Cover Open	The optional tray 2 jam cover is open.	Close the tray 2 cover firmly.

Common Windows Problems

Problem	Possible Cause and Solution
“File in Use” message appears during installation.	Exit all software applications. Remove all software from the StartUp Group, then restart Windows. Reinstall the printer driver.
“Error Writing to LPTx” message appears.	• Ensure that all cables are connected correctly and the printer is on. • If bi-directional communication is not turned on in the driver, it will also cause this message.
“General Protection Fault”, “Exception OE”, “Spool32”, or “Illegal Operation” messages appear.	Close all other applications, reboot Windows and try printing again.
“Fail To Print”, “A printer timeout error occurred.” messages appear.	These messages may appear during printing. Just keep waiting until the printer finishes printing. If the message appears in standby mode or after printing has been completed, check the connection and/or whether an error has occurred.

NOTE: Refer to the Microsoft Windows 98SE/Me/NT 4.0/2000/2003/XP User’s Guide that came with your PC for further information on Windows error messages.

Common Macintosh Problems

Problem	Possible Cause and Solution
The printer does not print a document from Acrobat Reader.	You should change the Print Method option to **Print as Image** when you print from Acrobat Reader.
The document has printed, but the print job has not disappeared from the spooler in Mac OS 10.3.2.	Update your Mac OS to OS 10.3.3 or higher.

Common Linux Problems

Problem	Possible Cause and Solution
I can’t change settings in the configuration tool.	You need to have administrator privileges to be able to change global settings.
I am using the KDE desktop but the configuration tool and LLPR won’t start.	You may not have the GTK libraries installed. These usually come with most Linux distributions, but you may have to install them manually. Refer to your distribution’s installation manual for more details about installing additional packages.
I just installed this package but can’t find entries in the KDE/Gnome menus.	Some versions of the KDE or GNOME desktop environments may require that you restart your session for the changes to take effect.
I get a “Some options are not selected” error message while editing the printer settings.	Some printers have conflicting settings, meaning that some settings for two options can’t be selected at the same time. When you change a setting and the Printer Package detects such a conflict, the conflicting option is changed to a “No Choice” value. You have to choose an option that does not conflict before being able to submit the changes.
I can’t make a printer the system default.	In some conditions, it may not be possible to change the default queue. This happens with some variants of LPRng, especially on recent RedHat systems that use the “printconf” database of queues. When using printconf, the **/etc./printcap** file is automatically refreshed from the database of printers managed by the system (usually through the “printtool” command), and the queues in **/etc./printcap.local** are appended to the resulting file. The default queue in LPRng is defined as the first queue in **/etc./printcap**, and therefore it is not possible for the Linux Printer Package to change the default when some queues have otherwise been defined using printtool. LPD systems identify the default queue as the one named “lp”. Thus, if there is already a queue by this name, and if it doesn’t have an alias, then you won’t be able to change the default. To work around this, you can either delete the queue or rename it by manually editing the **/etc./printcap** file.

Problem	Possible Cause and Solution
The N-up setting does not work correctly for some of my documents.	The N-up feature is achieved through post-processing of the PostScript data that is sent to the printing system. However, such post-processing can only be adequately achieved if the PostScript data conforms to the Adobe Document Structing Conventions. Problems may arise when using N-up and other features that rely on post-processing if the document being printed isn't compliant.
I am using BSD lpr (Slackware, Debian, older distributions) and some options chosen in LLPR don't seem to take effect.	Legacy BSD lpr systems have a hard limitation on the length of the option string that can be passed to the printing system. As such, if you selected a number of different options, you may have exceeded the length of the options and some of your choices won't be passed to the programs responsible for implementing them.Try to select fewer options that deviate from the defaults, to save on memory usage.
I am trying to print a document in Landscape mode, but it prints rotated and cropped.	Most Unix applications that offer a Landscape orientation option in their printing options will generate correct PostScript code that should be printed as is. In that case, you need to make sure that you leave the LLPR option set to its default Portrait setting, to avoid unwanted rotations of the page that would result in cropped output.
Some pages come out all white (nothing is printed), and I am using CUPS.	If the data being sent is in Encapsulated PostScript (EPS) format, some earlier versions of CUPS (1.1.10 and before) have a bug preventing them from being processed correctly. When going through LLPR to print, the Printer Package will work around this issue by converting the data to regular PostScript. However, if your application bypasses LLPR and feeds EPS data to CUPS, the document may not print correctly.
I can't print to an SMB (Windows) printer.	To be able to configure and use SMB-shared printers (such as printers shared on a Windows printer), you need to have a correct installation of the SAMBA package that enables that feature. The "smbclient" command should be available and usable on your system.
My application seems to be frozen while LLPR is running.	Most Unix applications will expect a command like the regular "lpr" command to be non-interactive and thus return immediately. Since LLPR is waiting for user input before passing the job on to the print spooler, very often the application will wait for the process to return, and thus will appear to be frozen (its windows won't refresh). This is normal and the application should resume functioning correctly after the user exits LLPR.

Problem	Possible Cause and Solution
How do I specify the IP address of my SMB server?	It can be specified in the "Add Printer" dialogue of the configuration tool, if you don't use the CUPS printing system. Unfortunately, CUPS currently doesn't allow you to specify the IP address of SMB printers, so you will have to be able to browse the resource with SAMBA in order to be able to print.
Some documents come out as white pages when printing.	Some versions of CUPS, especially those shipped with Mandrake Linux before the 8.1 release, have some known bugs when processing PostScript output from some applications. Try upgrading to the latest version of CUPS (at least 1.1.14). Some RPM packages for the most popular distributions are provided as a convenience with this Linux Printing Package.
I have CUPS and some options (such as N-up) seem to be always enabled even though I don't choose them in LLPR.	There may be some local options defined in your **~/.lpoptions** file, which are manipulated by the lpoptions command. These options are always used if not overridden by LLPR settings. To get rid of all options for a printer, run the following command, replacing "printer" with the name of the queue: lpoptions -x printer
I configured a printer to print to a file, but I get "Permission denied" errors.	Most printing systems will not run as the super-user but as a special user (usually "lp"). Therefore, make sure that the file you have chosen to print to is accessible to the user owning the spooler daemon.
On my PCL (or GDI) printer, I sometimes get error messages printing instead of my document.	Unfortunately, some Unix applications may generate non-compliant PostScript output that may not be supported by Ghostscript, or even the printer itself in PostScript mode. You can try to capture the output to a file and view the results with Ghostscript (gv or ghostview will allow you to do so interactively) and see if you get error messages. However, since the application is probably at fault, contact your software vendor to inform them of the issue.
Some color images come out all black.	This is a known bug in Ghostscript (until GNU Ghostscript version 7.05) when the base color space of the document is indexed color space and it is converted through CIE color space. Because Postscript uses CIE color space for Color Matching System, you should upgrade Ghostscript on your system to at least GNU Ghostscript version 7.06 or later. You can find recent Ghostscript versions at www.ghostscript.com.

8 Using Your Printer on a Network *(CLP-600N only)*

If you work in a networked environment, the printer can be shared by other users on the network.

This chapter includes:

- **About Sharing the Printer on a Network**
- **Setting Up a Network-Connected Printer**

NOTE: If you are a CLP-600 user, you can only connect your printer to a network locally, for use via a single computer.

About Sharing the Printer on a Network

If you work in a networked environment, you can connect your printer to the network.

Locally-Shared Printer

You can connect the printer directly to a selected computer, which is called the "host computer" on the network. The printer can then be shared by other users on the network through a Windows 98SE/Me/XP/NT 4.0/2000/2003 network printer connection.

For details about sharing the printer locally, see the **Software User's Guide**.

Wired Network-connected Printer

The CLP-600N printer has a built-in network interface. For more information about connecting your printer to a network, see 2.7.

Wireless Network-connected Printer

To use a CLP-600N printer in a wireless network environment, you need to install an optional wired/wireless network interface card in your printer.

Contact your Samsung dealer or the retailer where you bought your printer. We strongly recommend that the card be installed by a trained service professional.

Printing Across a Network

Whether the printer is locally connected or network-connected, you need to install the CLP-600 series printer software on each computer that prints documents using the printer.

Setting Up a Network-Connected Printer

You have to set up the network protocols on the printer to use it as your network printer. Setting protocols can be accomplished by using the supplied network program. Please refer to the Network User's Guide.

You can configure the basic network parameters through the printer's control panel. Use the printer control panel to do the following:

- Enable or disable network protocols (IPX/SPX)
- Configure TCP/IP
- Configure IPX frame types

Configuring Network Parameters on the Control Panel

Supported Operating Systems

NOTE: The operating systems supported by the network card may be different than the operating systems supported by the printer. The following table shows the network environments supported by the printer.

Item	Requirements
Network Interface	10/100 Base-TX (standard) or 802.11a/b/g Wireless LAN
Network Operating System	• Novell NetWare 4.x, 5.x, 6.x • Windows 98SE/Me/NT 4.0/2000/2003/XP • Various Linux OS • Macintosh OS 10.3.x
Network Protocols	• Netware IPX/SPX • TCP/IP, DLC/LLC on Windows
Dynamic Addressing Server	DHCP, BOOTP

- IPX/SPX: Internet Packet eXchange/Sequenced Packet eXchange
- TCP/IP: Transmission Control Protocol/Internet Protocol
- DLC/LLC: Data Link Control/Logical Link Control
- DHCP: Dynamic Host Configuration Protocol
- BOOTP: Bootstrap Protocol

Printing a Network Configuration Page

The Network Configuration page shows how the network interface card on your printer is configured. The default settings which are suitable for most applications are enabled.

1. In ready mode, press the **Menu** button ( ) until you see "Network" on the bottom line of the display.
2. Press the **Enter** button ( ) to access the menu.
3. Press the scroll button (or) until "Print Net CFG" displays on the bottom line.
4. Press the **Enter** button ( ).

   The Network Configuration page prints out.

Setting Network Protocols

When you first install the printer, all supported network protocols are enabled. If a network protocol is enabled, the printer may actively transmit on the network even when the protocol is not in use. This may increase network traffic slightly. To eliminate unnecessary traffic, you can disable unused protocols.

1. In ready mode, press the **Menu** button ( ) until you see "Network" on the bottom line of the display. Press the **Enter** button ( ) to access the menu.
2. Press the **Enter** button ( ) when "Config Network" displays on the bottom line.
3. Press the scroll button (or) until "Yes" displays, and press the **Enter** button ( ). Then press the **Upper Level** button ( ).
4. Press the scroll button (or) until you see the desired protocol on the bottom line.

   You can choose between "Config TCP" and "Netware".
5. Press the **Enter** button ( ).
6. Press the scroll button (or) to change the setting.

   If you selected "Config TCP", change the setting to "No" (disable) or "Yes" (enable).

   If you selected "Netware", change the setting to "Off" (disable) or "On" (enable).
7. Press the **Enter** button ( ) to save the selection.
8. Press the **On Line/Continue** button ( ) to return to ready mode.

Configuring TCP/IP

Your printer can be set up on a variety of TCP/IP networks. There are several ways in which your printer can be assigned a TCP/IP address, depending on your network.

- Static Addressing: TCP/IP address is assigned manually by the system administrator.
- Dynamic Addressing BOOTP/DHCP (default): TCP/IP address is assigned automatically by the server.

Static Addressing

To enter the TCP/IP address from your printer's control panel, take the following steps:

1. In ready mode, press the **Menu** button ( ) until you see "Network" on the bottom line of the display. Press the **Enter** button ( ) to access the menu.
2. Press the **Enter** button ( ) when "Config Network" displays on the bottom line.
3. Press the scroll button (or) until "Yes" displays, and press the **Enter** button ( ).
4. Press the **Upper Level** button ( ), then use the scroll button ( ).
5. Press the **Enter** button ( ) when "Config TCP" displays.
6. Press the scroll button (or) until "Yes" displays, and press the **Enter** button ( ).
7. Press the **Upper Level** button ( ), then use the scroll button ( ).
8. Press the **Enter** button ( ) when "IP Get Method" displays.
9. Press the scroll button (or) until "Static" displays, and press the **Enter** button ( ).
10. Press the **Upper Level** button ( ), then use the scroll button ( ).
11. Press the **Enter** button ( ) when "IP Address" displays.

    An IP address consists of 4 bytes.

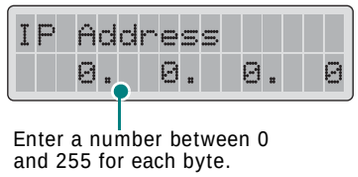

12. Press the scroll button (or) to enter a number between 0 and 255 and press the **Enter** button ( ).

13 Repeat step 12 to complete the address from the 1st byte to the 4th byte.

14 To select other parameters, such as the Subnet Mask or Gateway, press the scroll button (or). Press the **Enter** button ( ).

15 Repeat steps 12 through 13 to configure the other TCP/IP parameters.

16 Press the **On Line/Continue** button ( ) to return to ready mode.

Dynamic Addressing (BOOTP/DHCP)

To assign the TCP/IP address automatically by the server, take the following steps:

1 In ready mode, press the **Menu** button ( ) until you see "Network" on the bottom line of the display. Press the **Enter** button ( ) to access the menu.

2 Press the **Enter** button ( ) when "Config Network" displays on the bottom line.

3 Press the scroll button (or) until "Yes" displays, and press the **Enter** button ( ).

4 Press the **Upper Level** button ( ), then use the scroll button ( ).

5 Press the **Enter** button ( ) when "Config TCP" displays.

6 Press the scroll button (or) until "Yes" displays, and press the **Enter** button ( ).

7 Press the **Upper Level** button ( ), then use the scroll button ( ).

8 Press the **Enter** button ( ) when "IP Get Method" displays.

9 Press the scroll button (or) until "DHCP" displays, and press the **Enter** button ( ).

10 To assign the address from the BOOTP server, press the **Enter** button ( ) when "BOOTP" displays.

11 Press the **On Line/Continue** button ( ) to return to ready mode.

Configuring IPX Frame Types

On IPX/SPX protocol networks (for example, Novell NetWare), the format of the network communication frames must be specified for the printer. In most cases, you can keep the 'Auto' default setting. However, you can manually set the frame type format, if required.

- **Auto** (default): Automatically senses and limits the frame type to the first one detected.
- **EN_8023**: Limits the frame type to IPX over IEEE 802.3 frames. All others will be discarded.
- **EN_II**: Limits the frame type to IPX over Ethernet Frames. All others will be discarded.
- **EN_8022**: Limits the frame type to IPX over IEEE 802.2 with IEEE 802.3 frames. All others will be discarded.
- **EN_SNAP**: Limits the frame type to IPX over SNAP with IEEE 802.3 frames. All others will be discarded.

Note that the IPX/SPX protocol must be enabled in the **Netware** menu before you can configure frame types. See "Setting Network Protocols" on page 8.2.

Take the following steps to change the frame type format:

1 In ready mode, press the **Menu** button ( ) until you see "Network" on the bottom line of the display. Press the **Enter** button ( ) to access the menu.

2 Press the **Enter** button ( ) when "Config Network" displays on the bottom line.

3 Press the scroll button (or) until "Yes" displays on the bottom line. Press the **Enter** button ( ).

4 Press the **Upper Level** button ( ).

5 Press the scroll button (or) until "Netware" displays on the bottom line. Press the **Enter** button ( ).

6 Press the scroll button (or) until "On" displays on the bottom line. Press the **Enter** button ( ).

7 Press the **Upper Level** button ( ), then use the scroll button ( ).

8 Press the **Enter** button ( ) when "Config Netware" displays.

9 Press the scroll button (or) until "Yes" displays on the bottom line. Press the **Enter** button ( ).

10 Press the **Upper Level** button ( ), then use the scroll button ( ).

11 Press the **Enter** button ( ) when "IPX Frame Type" displays.

12 Press the scroll button (◁ or ▷) until you see the desired frame type and press the **Enter** button (✱).

13 Press the **On Line/Continue** button (⋯) to return to ready mode.

Restoring the Network Configuration

You can return the network configuration to its default settings.

1 In ready mode, press the **Menu** button (▤) until you see "Network" on the bottom line of the display.

2 Press the **Enter** button (✱) to access the menu.

3 Press the scroll button (◁ or ▷) until "Default Set" displays on the bottom line. Press the **Enter** button (✱).

4 Press the **Enter** button (✱) to confirm the selection.

5 Reboot the network interface card.

Rebooting the Network Interface Card

If you configured the "Netware" or "Config Wireless" menu option, the printer will not recognize your change.

In this case, you can simply reboot the network interface card without turning your printer off and back on.

1 In ready mode, press the **Menu** button (▤) until you see "Network" on the bottom line of the display.

2 Press the **Enter** button (✱) to access the menu.

3 Press the scroll button (◁ or ▷) until "Reset Network" displays on the bottom line. Press the **Enter** button (✱).

4 Press the **Enter** button (✱).

The printer reboots the network interface card.

Configuring the Wireless Network

See the instructions supplied with the wireless network interface card you purchased.

You can easily configure the wireless network environments using the SetIP program in Windows. See the Wireless Network User's Guide.

To configure the wireless settings:

1 In ready mode, press the **Menu** button (▤) until you see "Network" on the bottom line of the display. Press the **Enter** button (✱) to access the menu.

2 Press the **Enter** button (✱) when "Config Network" displays on the bottom line.

3 Press the scroll button (◁ or ▷) until "Yes" displays on the bottom line. Press the **Enter** button (✱).

4 Press the **Upper Level** button (↺).

5 Press the scroll button (◁ or ▷) until "Config Wireless" displays on the bottom line. Press the **Enter** button (✱).

6 Press the scroll button (◁ or ▷) until "Yes" displays on the bottom line. Press the **Enter** button (✱).

You can configure the following items:

- **SSID**: When you select "Search List", the wireless network card on your printer searches for wireless networks in the area and shows the results on the list. Select a network from the list. You cannot change "Operation Mode", "Frequency Mode", or "Channel".

  If you select "Custom", you can configure the wireless settings according to your needs and enter a name of up to 32 letters for your "Custom" setting. "SSID" is case sensitive, so you need to change it carefully. Using the scroll buttons, find the letter you want and press the **Enter** button (✱). When the cursor moves to the next input field, enter the following letters the same way you entered the first letter. After you have entered the last letter of the name, press the **Enter** button (✱) once again to save the ID. The way to enter the key number for the encryption key is the same as to enter letters.

- **Operation Mode**: "Ad-Hoc" mode allows the wireless devices to communicate directly with each other. This is the default operating mode for the print server.

  If your network uses an Access Point, you must reconfigure the operation mode to "InfraStructure". "InfraStructure" mode allows both wireless and cabled computers to send files to the printer through an Access Point.

- **Frequency Mode**: "IEEE802.11a", "IEEE802.11g", or "IEEE802.11a, g".

  The Samsung print server can be configured to operate in the following frequency modes:

  - IEEE802.11a mode: The radio uses IEEE802.11a standard(5GHz).
  - IEEE802.11g mode: The radio uses the frequency range defined in IEEE802.11g standard(2.4GHz). This mode is compatible with IEEE802.11b standard.
  - IEEE802.11a, g mode: The radio uses the frequency range defined in IEEE802.11a and IEEE802.11g standard(5GHz and 2.4GHz).

  The default setting is "IEEE802.11a, g".

- **Channel**: This option is available in the "Ad-Hoc" mode only. In most cases, you will not need to change this setting. The print server will scan all available channels for the specified network and will adapt its channel to the one detected.

- **Security Mode**: “None”, “Static WEP”, or “WPA” The Samsung print server provides three kinds of Security Modes (such as “None” Static WEP, and WPA) for easy setting of wireless network security. “None” security mode is used when the validation of wireless device's identity and data encryption are not required for your network. Static WEP uses WEP (Wired Equivalent Privacy) algorithm suggested by IEEE802.11 standard for security. A WEP algorithm provides data encryption and decryption for data communication. Static WEP security requires WEP key for data encryption, decryption, and authentication. WPA provides more security and better key management than Static WEP by using IEEE802.1X EAP authentication and dynamic encryption (such as dynamic WEP, TKIP, AES). WPA cannot be configured on printer's control panel. In order to choose WPA as security mode, you must use SWAS (Syncthru Web Admin Service). For more information about WPA settings, see the Network User's Guide. The default setting is “None”.
- **Authentication**: “Open System” or “Shared Key”. This option is available in Static WEP mode only. If required by your network, the proper authentication method must be configured on the print server. The default setting is “Open System”.
- **WEP Encryption**: “64-bit WEP” or “128-bit WEP”. This option is available in Static WEP mode only. If your network uses Static WEP encryption keys, you must configure the encryption keys. You can configure up to four keys. The active key must match the value and active key position (for example, Key 1) configured on other wireless devices. The default setting is “64-bit WEP”.
- **Using Key**: Select the key to use in your network. This option is available in Static WEP mode only. The default setting is “Key 1”.
- **Key Type**: Select the key type of your network. This option is available in Static WEP mode only. The default setting is “Hexadecimal”.
- **Key1**, **Key2**, **Key3**, **Key4**: Enter the key number for “Encryption”. This option is available in Static WEP mode only. The default setting is 0 for all keys. The numbers you can enter are as follows:

	Hexadecimal	Alphanumeric
64-bit WEP	10 digits	5 characters
128-bit WEP	26digits	13 characters

NOTE: Your changes for wireless parameters will be applied after resetting the print server. In order to reset the print server, see “Rebooting the Network Interface Card” on page 8.4.

Restoring the Wireless Configuration

You can return the wireless configuration only to its default settings.

1. In ready mode, press the **Menu** button ( ) until you see “Network” on the bottom line of the display. Press the **Enter** button ( ) to access the menu.
2. Press the **Enter** button ( ) when “Config Network” displays on the bottom line.
3. Press the scroll button (or) until “Yes” displays on the bottom line.
4. Press the **Upper Level** button ( ).
5. Press the scroll button (or) until “Config Wireless” displays on the bottom line. Press the **Enter** button ( ).
6. Press the scroll button (or) until “Yes” displays on the bottom line. Press the **Enter** button ( ).
7. Press the **Upper Level** button ( ).
8. Press the scroll button (or) until “Wireless Default” displays on the bottom line. Press the **Enter** button ( ).
9. Press the **Enter** button ( ) to confirm the selection.

NOTE: This feature will be applied after resetting the print server. In order to reset the print server, see “Rebooting the Network Interface Card” on page 8.4.

9 Installing Printer Options

Your printer is a full-featured laser printer that has been optimized to meet most of your printing needs. Recognizing that each user may have different requirements, however, Samsung makes several options available to enhance the printer's capabilities.

This chapter includes:

- **Precautions When Installing Printer Options**
- **Installing an Optional Paper Tray**
- **Installing a Network Interface Card (CLP-600N Only)**

Precautions When Installing Printer Options

DISCONNECT THE POWER CORD:

Never remove the printer control board while the printer is plugged in.

To avoid the possibility of an electrical shock, always disconnect the power cord when installing or removing ANY internal or external printer option.

DISCHARGE STATIC ELECTRICITY:

The control board and internal printer option, Network Interface Cards, are sensitive to static electricity. Before installing or removing an internal option, discharge static electricity from your body by touching something metal, such as the metal back plate on any device plugged into a grounded power source. If you walk round before finishing installation, discharge any static electricity once again.

Installing an Optional Paper Tray

You can increase the paper handling capacity of your printer by installing an optional Tray2. This tray holds 500 sheets of paper.

1 Remove the packing tape and the packing material inside of the tray.

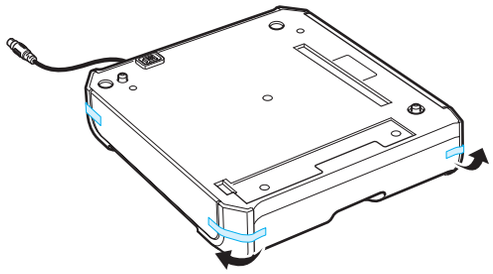

2 Find the location of the connector and the optional tray positioners.

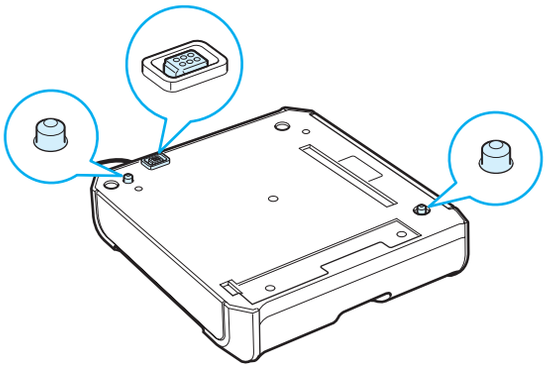

3 Place the printer over the tray, aligning the feet on the printer with the positioners on the optional tray.

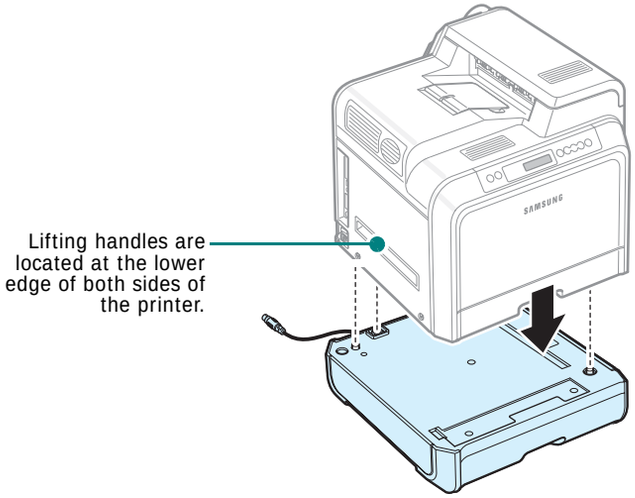

CAUTION: This printer weighs 29kg including the toner cartridges and the cassette. Use safe lifting and handling techniques. If you need to move the printer, it should be moved by two people. Use the lifting handles as shown in the diagram (see page 1.2). Back injury could be caused if a single person attempts to lift the printer.

4 Plug the tray's interface cable into the connector on the left rear of the printer.

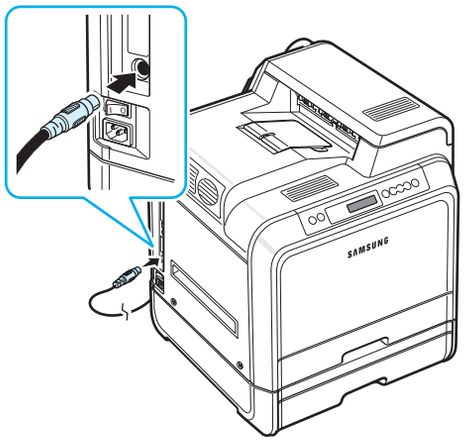

After installing Tray 2, you must set the tray as installed in the printer properties window.

1 Click the Windows **Start** menu.

2 For Windows 98SE/Me/NT 4.0/2000, select **Settings** and then **Printers**.

For Windows XP/2003, select **Printers and Faxes**.

3 Select the **Samsung CLP-600 Series** printer icon.

4 Right-click on the printer icon and select **Properties**.

5 Click the **Printer** tab, and select **Tray 2** from the **Optional Tray** drop-down list.

6 Click **OK**.

Installing a Network Interface Card *(CLP-600N Only)*

NOTE: This procedures are only for service technicians.

You can use the CLP-600N on a network with the built-in network interface card.

If you want to use the printer in both wired and wireless network environments, you need to install an optional wired/wireless network interface card. Contact your Samsung dealer or the retailer where you bought your printer. We strongly recommend that the card be installed by a trained service professional.

Check to see if there are any missing parts in your optional interface card package.

Interface Card Package
Network: Ethernet 10/100 Base TX + 802.11b Wireless LAN (Internal)
Order number: ML-00LC
Contents: Wireless Network interface Card, Network CD, Network Quick Guide 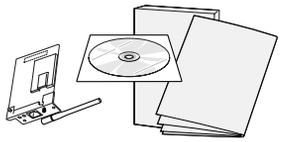

NOTE: The antenna connected to the wired/wireless network interface you purchase may not be separate from the card, depending on your country.

To install a wired/wireless network interface card:

1 Turn the printer power off and unplug all cables from the printer.

2 Remove the four screws on the back of the printer.

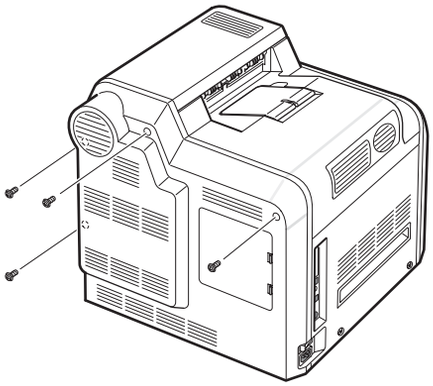

3 Remove the control board cover from the printer.

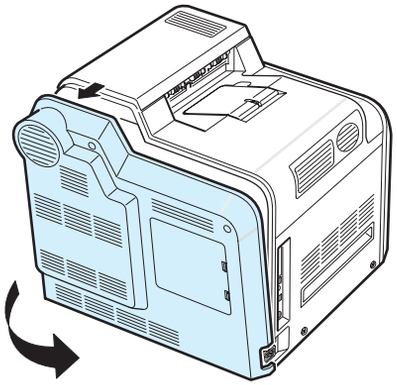

4 Remove the four screws holding the metal plate in place, and then remove the metal cover, as shown below.

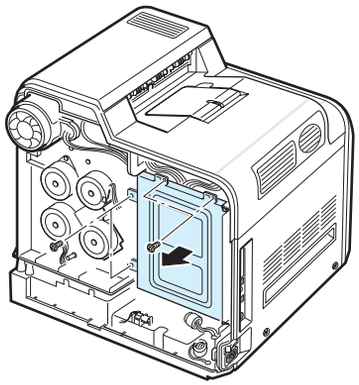

5 To remove an existing wired network interface card, remove the two screws and the card.

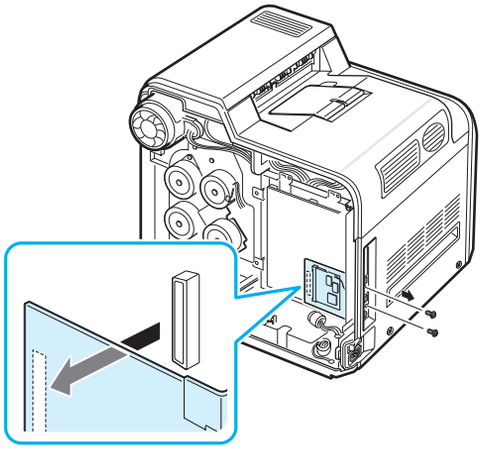

6 Separate the wired/wireless network card antenna from the card itself.

7 Align the connector on the network interface card with the connector on the control board. Make sure that the jacks on the card go through the holes. Push the card firmly into the connector on the control board until it is completely and securely seated.

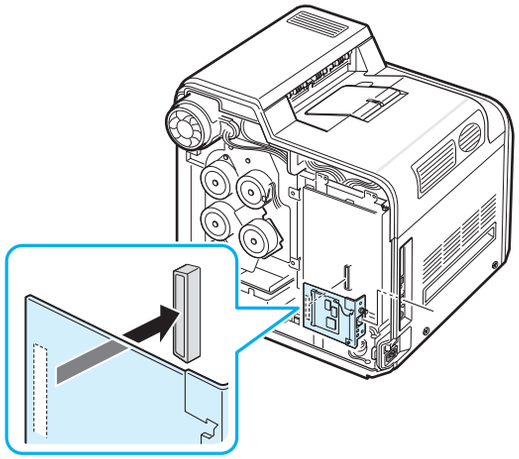

8 Insert the two screws included with the interface card package into the appropriate holes above and below the Ethernet network port, as shown below. Carefully tighten them.

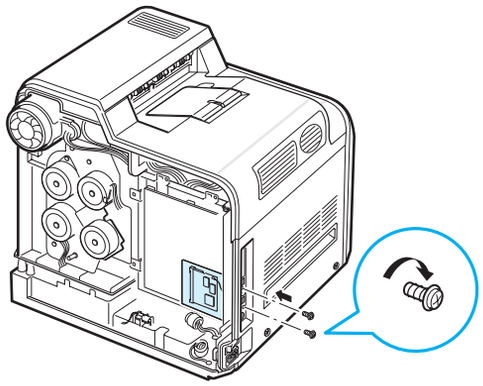

9 Insert the antenna counter clockwise and flip it upright, as shown.

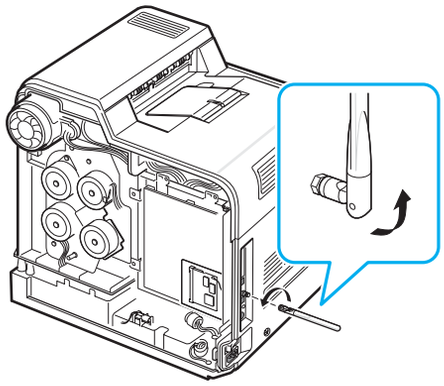

10 Replace the metal cover, as shown below, and replace the four screws you removed in step 4.

11 Replace the control board cover, as shown below, and replace the four screws you removed in step 2.

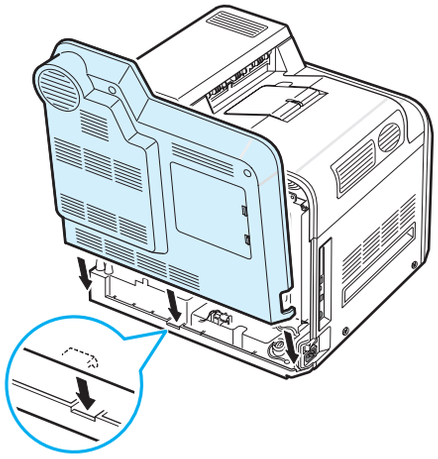

12 Plug one end of the Ethernet cable into the Ethernet network port on the printer and the other end of the cable into a network LAN connection.

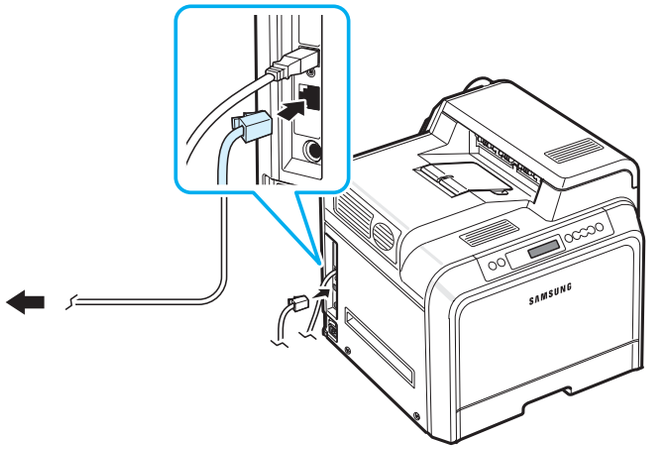

NOTE: For information about configuring and using the printer in both wired and wireless network environments, refer to the Network Guide provided with the wired/wireless network interface card. You can also configure the network parameters on the control panel; see page 8.4.

10 Specifications

This chapter includes:

- **Printer Specifications**
- **Paper Specifications**

Printer Specifications

Item	Specifications and Description
Model Name	CLP-600, CLP-600N(DC60CPS)
Print Speed*	Black and color: Up to 20 PPM in A4 (21 PPM in Letter)
Resolution	Up to 2400 x 600 dpi
Warm-up Time	Less than 60 seconds
First Print out Time	30 seconds (for Ready)
Power Rating	110 ~ 127VAC, 10A (USA, Canada), 50/60Hz 220 ~ 240VAC, 5A (Others), 50/60Hz
Power Consumption	550 W average during operation / Less than 35 W in power save mode
Noise Level**	Less than 52 dBA (printing)
	Less than 44 dBA (Standby printing)
Consumables Life	Black/Yellow/Magenta/Cyan Toner Cartridge: Approx. 4,000 A4/Letter pages at ISO 19798 5% Coverage (for starter, 2,000 pages)
	Paper Transfer Belt: Approx. 35,000 black and color pages***
	Fuser: Approx. 50,000 black and color pages***
Duty Cycle	Monthly: Up to 35,000 pages
Weight	29kg (including consumables)(64 lbs)
Package Weight	Paper: 3.5Kg, Plastic: 900g
External Dimensions (W x D x H)	465 (W) x 465 (D) x 445 (H) mm (18.3 x 18.3 x 17.5 in.)
Operating Environment	Temperature: 10 ~ 32.5°C / 50 ~ 90°F Humidity: 20 ~ 80% RH
Printer Language	SPL-C (Samsung Printer Language Color)
Memory	32 MB (non expandable)
Fonts	Windows Font
Interface	CLP-600: USB 2.0
	CLP-600N: USB 2.0, Ethernet 10/100 Base TX
OS Compatibility****	Windows 98SE/Me/NT 4.0/2000/XP/2003, Various Linux OS, Mac 10.3.x Windows NT 4.0 is only supported on the CLP-600N.
Option	CLP-600N only: Ethernet 10/100 Base TX + 802.11a/b/g Wireless LAN (Internal)

* Print speed will be affected by operating system used, computing performance, application software, connecting method, media type, media size, and job complexity.
** Sound Pressure Level, ISO7779
*** May be affected by operating environment, printing interval, media type, and media size.
**** Please visit www.samsungprinter.com to download the latest software version.

Paper Specifications

Overview

Your printer accepts a variety of print materials, such as cut-sheet paper (including up to 100% recycled fiber content paper), envelopes, labels, and custom-size paper. Properties, such as weight, composition, grain, and moisture content, are important factors affecting the printer's performance and the output quality. Paper that does not meet the guidelines outlined in this User's Guide can cause the following problems:

- Poor print quality
- Increased paper jams
- Premature wear on the printer.

NOTES:
- Some paper may meet all of the guidelines in this guide and still not produce satisfactory results. This may be the result of improper handling, unacceptable temperature and humidity levels, or other variables over which Samsung has no control.
- Before purchasing large quantities of paper, ensure that the paper meets the requirements specified in this User's Guide.

CAUTION: Using paper that does not meet these specifications may cause problems, requiring repairs. These repairs are not covered by the Samsung warranty or service agreements.

Supported Sizes of Paper

Tray1 / Tray2	Dimensions*	Weight	Capacity**
Letter	8.5 x 11in. (216 x 279mm)	75 to 90g/m^2 bond (20 to 24lb) for single-sided printing	• 250 sheets of 75g/m^2 bond paper for Tray 1 • 500 sheets of 75g/m^2 bond paper for Tray 2
A4	8.27 x 11.7in. (210 x 297mm)		

Multi-purpose Tray	Dimensions*	Weight	Capacity**
Minimum Size (custom)	3.5 x 5.5in. (90 x 140mm)	75 to 163g/m^2 bond (20 to 43lb)	100 sheets of 75g/m^2 bond paper
Maximum Size (custom)	8.5 x 14in. (216 x 356mm)		
Labels***	Same minimum and maximum paper sizes as listed above.	Thickness: 0.10 x 0.14 mm (0.0039 x 0.0055in.)	10 typical
Envelopes		75 to 105g/m^2 (20to 27lb)	up to 10

* The printer supports a wide range of media sizes.
** Capacity may vary depending on media weight and thickness, and environment.
*** Smoothness: 100 to 250 (Sheffield)

NOTE: You may experience jams when using print materials with a length of less than 140mm (5.5in.). For optimum performance, ensure that you are storing and handling the paper correctly. Please refer to “Printer and Paper Storage Environment” on page 10.3.

Guidelines for Using Paper

For the best result, use conventional 75g/m^2 (20lb) paper. Ensure that the paper is of good quality, and free of cuts, nicks, tears, spots, loose particles, dust, wrinkles, voids, and curled or bent edges.

If you are unsure of what type of paper you are loading, such as bond or recycled paper, check the label on the package.

The following problems may cause print quality deviations, jamming or even damage to the printer.

Symptom	Problem with Paper	Solution
Poor print quality or toner adhesion, problems with feeding	Too moist, too rough, too smooth, or embossed; faulty paper lot	Try another kind of paper, between 100 ~ 250 Sheffield, 4 ~ 5% moisture content.
Dropout, jamming, curl	Stored improperly	Store paper flat in its moisture-proof wrapping.
Increased gray background shading/printer wear	Too heavy	Use lighter paper, open the rear output tray.
Excessive curl problems with feeding	Too moist, wrong grain direction, or short-grain construction	Use long-grain paper.
Jamming, damage to printer	Cutouts or perforations	Do not use paper with cutouts or perforations.
Problems with feeding	Ragged edges	Use good quality paper.

NOTES:
- Do not use letterhead paper printed with low-temperature inks, such as those used in some types of thermography.
- Do not use raised or embossed letterhead.
- The printer uses heat and pressure to fuse toner to the paper. Ensure that any colored paper or preprinted forms use inks that are compatible with this fusing temperature (180°C or 356°F for 0.1 second).

Paper Specifications

Category	Specifications
Acid Content	5.5 ~ 8.0pH
Caliper	0.094 ~ 0.18mm (3.0 ~ 7.0mils)
Curl in Ream	Flat within 5mm (0.02in.)
Cut Edge Conditions	Cut with sharp blades with no visible fray.
Fusing Compatibility	Must not scorch, melt, offset, or release hazardous emissions when heated to 180°C (356°F) for 0.1 second.
Grain	Long Grain
Moisture Content	4% ~ 6% by weight
Smoothness	100 ~ 250 Sheffield

Paper Output Capacity

Output Tray	Capacity
Face-down	250 sheets of 75g/m^2 bond paper

Paper Input Capacity

Input Tray	Capacity
Cassette	250 sheets of 75g/m^2 bond paper
MP tray	100 sheets of 75g/m^2 bond paper
Optional tray	500 sheets of 75g/m^2 bond paper

Printer and Paper Storage Environment

Paper storage environmental conditions directly affect the feed operation.

Ideally, the printer and paper storage environment should be at or near room temperature, and not too dry or humid. Remember that paper is hygroscopic; it absorbs and loses moisture rapidly.

Heat works with humidity to damage paper. Heat causes the moisture in paper to evaporate, while cold causes it to condense on the sheets. Heating systems and air conditioners remove most of the humidity from a room. As paper is opened and used, it loses moisture, causing streaks and smudging. Humid weather or water coolers can cause the humidity to increase in a room. As paper is opened and used it absorbs any excess moisture, causing light print and dropouts. Also, as paper loses and gains moisture it can become distorted. This can cause paper jams.

Care should be taken not to purchase more paper than can be used in a short time (about 3 months). Paper stored for long periods may experience heat and moisture extremes, which can cause damage. Planning is important to prevent damage to large supplies of paper.

Unopened paper in sealed reams can remain stable for several months before use. Opened packages of paper have more potential for environment damage, especially if they are not wrapped with a moisture-proof barrier.

The paper storage environment should be properly maintained to ensure optimum printer performance. The required condition is 20° to 24°C (68° to 75°F), with a relative humidity of 45% to 55%. The following guidelines should be considered when evaluating the paper's storage environment:

- Paper should be stored at or near room temperature.
- The air should not be too dry or too humid.
- The best way to store an opened ream of paper is to rewrap it tightly in its moisture-proof wrapping. If the printer environment is subject to extremes, unwrap only the amount of paper to be used during the day's operation to prevent unwanted moisture changes.

Envelopes

Envelope construction is critical. Envelope fold lines can vary considerably, not only between manufacturers, but also within a box from the same manufacturer. Successful printing on envelopes depends upon the quality of the envelopes. When selecting envelopes, consider the following factors:

- Weight: The weight of the envelope paper should not exceed 90g/m^2 (24lb) or jamming may occur.
- Construction: Prior to printing, envelopes should lie flat with less than 6mm (0.25in.) curl, and should not contain air.
- Condition: Envelopes should not be wrinkled, nicked, or otherwise damaged.
- Temperature: You should use envelopes that are compatible with the heat and pressure of the printer.
- Size: You should only use envelopes within the following size ranges.

	Minimum	Maximum
Multi-purpose Tray	3.5 x 5.5in. (90 x 140mm)	8.5 x 14in. (216 x 356mm)

NOTES:
- Use only the Multi-purpose Tray to print envelopes.
- You may experience some paper jams when using any media with a length less than 140mm(5.5in.). This may be caused by paper that has been affected by environmental conditions. For optimum performance, make sure you are storing and handling the paper correctly. Please refer to “Printer and Paper Storage Environment” on page 10.3.

Envelopes with Double Side Seams

Double side-seam construction has vertical seams at both ends of the envelope rather than diagonal seams. This style may be more likely to wrinkle. Be sure the seam extends all the way to the corner of the envelope as illustrated below.

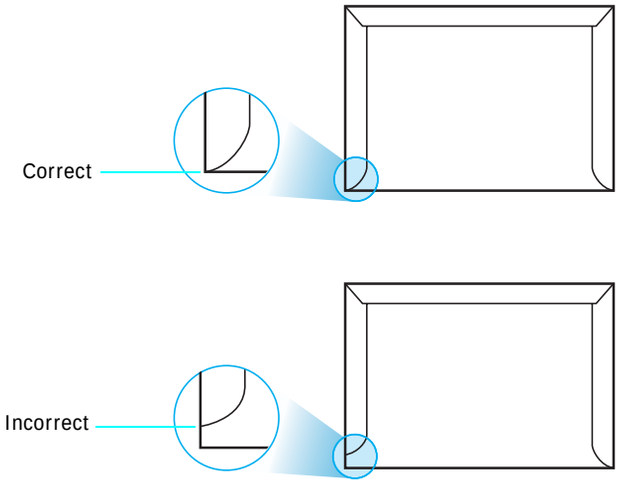

Envelopes with Adhesive Strips or Flaps

Envelopes with a peel-off adhesive strip or with more than one flap that folds over to seal must use adhesives compatible with the heat and pressure in the printer. The extra flaps and strips might cause wrinkling, creasing, or even jams and may even damage the fuser.

Envelope Margins

The following gives typical address margins for a commercial #10 or DL envelope.

Type of Address	Minimum	Maximum
Return address	0.6in. (15mm)	2in. (51mm)
Delivery address	2in. (51mm)	3.5in. (90mm)

NOTES:
- For best print quality, position margins no closer than 15mm (0.6in.) from the edges of the envelope.
- Avoid printing over the area where the envelope’s seams meet.

Envelope Storage

Proper storage of envelopes helps contribute to print quality. Envelopes should be stored flat. If air is trapped in an envelope, creating an air bubble, then the envelope may wrinkle during printing. See “Printing on Envelopes” on page 4.4.

Labels

CAUTION:
- To avoid damaging the printer, use only labels recommended for laser printers.
- To prevent serious jams, always use the Multi-purpose Tray to print labels and always use the rear output tray.
- Never print on the same sheet of labels more than once and never print on a partial sheet of labels.

When selecting labels, consider the quality of each component:

- Adhesives: The adhesive material should be stable at 180°C (356°F), the printer’s fusing temperature.
- Arrangement: Only use labels with no exposed backing between them. Labels can peel off sheets with spaces between the labels, causing serious jams.
- Curl: Prior to printing, labels must lie flat with no more than 5in. (13mm) of curl in any direction.
- Condition: Do not use labels with wrinkles, bubbles, or other indications of separation.

See “Printing on Labels” on page 4.5.

INDEX

C

card stock, print 4.6
cleaning
  inside 6.8
  outside 6.8
components 1.2
configuration page, print 6.1
connecting, USB 2.6
control panel 3.1
  buttons 3.2
  display 3.1
  menus 3.2
custom-sized materials, print 4.6

E

envelopes, print 4.4
error messages 7.14
Ethernet cable, connect 2.7

F

features
  printer 1.1

L

labels, print 4.5
Linux
  common problems 7.16
  driver, install 2.8
loading, paper
  in the Multi-purpose Tray 4.2
  in the optional tray 4.2
  in the standard tray 4.2
  using the manual feed 4.3

M

Macintosh
  common problems 7.16
  driver, install 2.8
manual feed mode, use 4.3
Multi-purpose Tray, use 4.2

N

network printing
  cable, connect 2.7
  card, install 9.2
  network-connected printer, set 8.1
  parameters, configure 8.1

O

option, install
  network card 9.2

P

paper
  choose 4.1
  guideline 4.1
  loading 4.2
  sizes and capacities 4.1
  specifications 10.1
paper jams, clear 7.4
paper size, change in the tray 2.5
paper transfer belt, replace 6.5
paper, load
  in the Multi-purpose Tray 4.2
  in the optional tray 4.2
  in the standard tray 2.4
  using the manual feed 4.3
preprinted paper, print 4.5
print quality problems, solve 7.12
printer driver, install 2.8
printing
  configuration page 6.1
problem, solve
  checklist 7.1
  error messages 7.14
  general 7.2
  Linux 7.16
  Macintosh 7.16
  paper jams 7.4
  print quality 7.12
  Windows 7.16

Q

quality problems, solve 7.12

R

replacing
  paper transfer belt 6.5
  toner cartridge 6.4

S

specification
  paper 10.1
  printer 10.1

T

toner cartridge
  maintaining 6.2
  redistributing 6.2
  replacing 6.4

U

USB, connect 2.6

www.samsungprinter.com

Rev. 0.01

SAMSUNG

Samsung Printer

Software User's Guide

CONTENTS

Chapter 1: INSTALLING PRINTER SOFTWARE IN WINDOWS

Installing Printer Software 4
- Installing Software for Local Printing 4
- Installing Software for Network Printing 8

Changing the Software Language 11

Reinstalling Printer Software 11

Removing Printer Software 11

Chapter 2: BASIC PRINTING

Printing a Document 12

Printer Settings 13
- Layout Tab 13
- Paper Tab 14
- Graphics Tab 15
- Extras Tab 16
- About Tab 16
- Printer Tab 16
- Using a Favorite Setting 17
- Using Help 17

Chapter 3: ADVANCED PRINTING

Printing Multiple Pages on One Sheet of Paper (N-Up Printing) 18

Printing Posters 19

Printing Booklets 19

Printing on Both Sides of Paper (Manual Duplex) 20

Printing a Reduced or Enlarged Document 21

Fitting Your Document to a Selected Paper Size 21

Using Watermarks 22
- Using an Existing Watermark 22
- Creating a Watermark 22

Editing a Watermark 23
Deleting a Watermark 23
Using Overlays 23
What is an Overlay? 23
Creating a New Page Overlay 23
Using a Page Overlay 24
Deleting a Page Overlay 25

Chapter 4: SHARING THE PRINTER LOCALLY

Setting Up a Host Computer 26
Setting Up a Client Computer 26

Chapter 5: USING SMART PANEL

Understanding Smart Panel 27
Opening the Troubleshooting Guide 27
Using Printer Settings Utility 28
Changing the Smart Panel Program Settings 28

Chapter 6: USING YOUR PRINTER IN LINUX

System Requirements 29
Installing the Printer Driver 30
Changing the Printer Connection Method 31
Uninstalling the Printer Driver 32
Using the Configuration Tool 32
Changing LLPR Properties 33

Chapter 7: USING YOUR PRINTER WITH A MACINTOSH

Installing Software for Macintosh 34
Setting Up the Printer 35
For a Network-connected Macintosh 35
For a USB-connected Macintosh 35
Printing 35
Printing a Document 35

Changing Printer Settings 36
Printing Multiple Pages on One Sheet of Paper 37

1 Installing Printer Software in Windows

This chapter includes:

- **Installing Printer Software**
- **Changing the Software Language**
- **Reinstalling Printer Software**
- **Removing Printer Software**

Installing Printer Software

You can install the printer software for local printing or network printing. To install the printer software on the computer, perform the appropriate installation procedure depending on the printer in use.

A printer driver is software that lets your computer communicate with your printer. The procedure to install drivers may differ depending on the operating system you are using.

All applications should be closed on your PC before beginning installation.

Installing Software for Local Printing

A local printer is a printer directly attached to your computer using the printer cable supplied with your printer, such as a USB or parallel cable. If your printer is attached to a network, skip this step and go to “Installing Software for Network Printing” on page 8.

You can install the printer software using the typical or custom method.

NOTE: If the “New Hardware Wizard” window appears during the installation procedure, click ☒ in the upper right corner of the box to close the window, or click **Cancel**.

Typical Installation

This is recommended for most users. All components necessary for printer operations will be installed.

1. Make sure that the printer is connected to your computer and powered on.
2. Insert the supplied CD-ROM into your CD-ROM drive.

   The CD-ROM should automatically run, and an installation window appears.

If the installation window does not appear, click **Start** and then **Run**. Type **X:\Setup.exe**, replacing "**X**" with the letter which represents your drive and click **OK**.

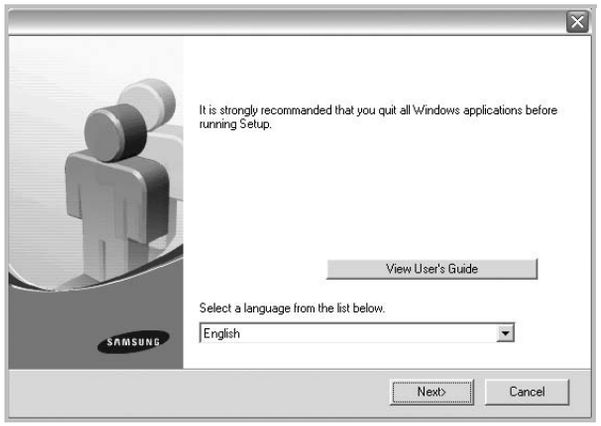

3 Click **Next**.

- If necessary, select a language from the drop-down list.
- **View User's Guide**: Allows you to view the User's Guide. If your computer doesn't have Adobe Acrobat, click on this option and it will automatically install Adobe Acrobat Reader for you.

4 Select **Typical installation for a local printer**. Click **Next**.

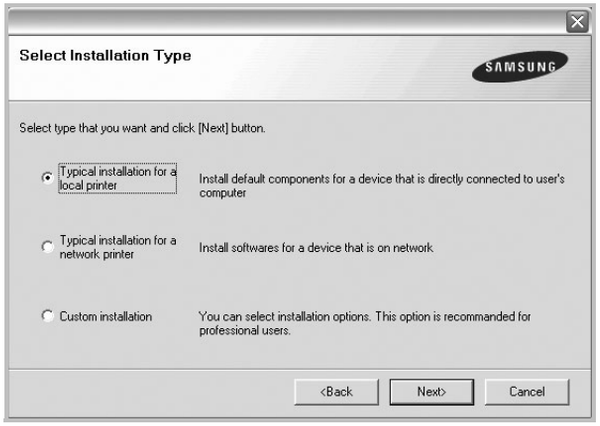

NOTE: If your printer is not already connected to the computer, the following window will appear.

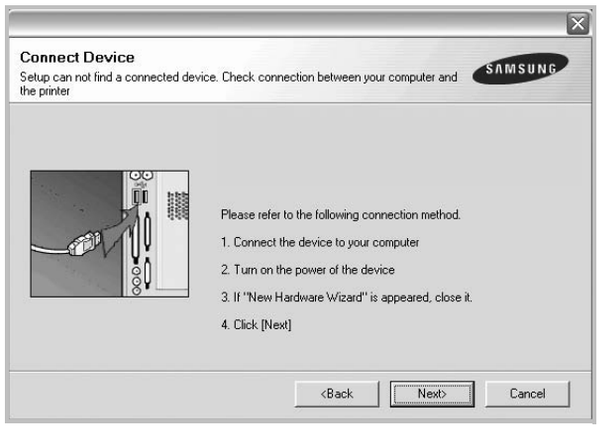

- After connecting the printer, click **Next**.
- If you don't want to connect the printer at this time, click **Next**, and **No** on the following screen. Then the installation will start and a test page will not be printed at the end of the installation.
- ***The installation window that appears in this User's Guide may differ depending on the printer and interface in use.***

5 After the installation is finished, a window asking you to print a test page appears. If you choose to print a test page, select the checkbox and click **Next**.

Otherwise, just click **Next** and skip to step 7.

6 If the test page prints out correctly, click **Yes**.

If not, click **No** to reprint it.

7 To register yourself as a user of Samsung Printers in order to receive information from Samsung, select the checkbox and click **Finish**. You are now sent to the Samsung web site.

Otherwise, just click **Finish**.

NOTE: After setup is complete, if your printer driver doesn't work properly, reinstall the printer driver. See "Reinstalling Printer Software" on page 11.

Custom Installation

You can choose individual components to install.

1 Make sure that the printer is connected to your computer and powered on.

2 Insert the supplied CD-ROM into your CD-ROM drive.

The CD-ROM should automatically run, and an installation window appears.

If the installation window does not appear, click **Start** and then **Run**. Type **X:\Setup.exe**, replacing "**X**" with the letter which represents your drive and click **OK**.

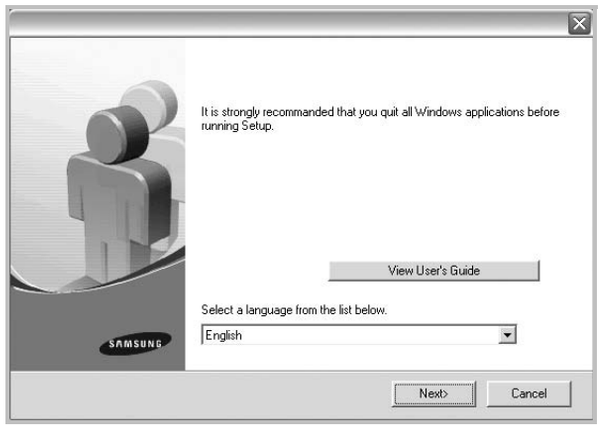

3 Click **Next**.

- If necessary, select a language from the drop-down list.
- **View User's Guide**: Allows you to view the User's Guide. If your computer doesn't have Adobe Acrobat, click on this option and it will automatically install Adobe Acrobat Reader for you.

4 Select **Custom installation**. Click **Next**.

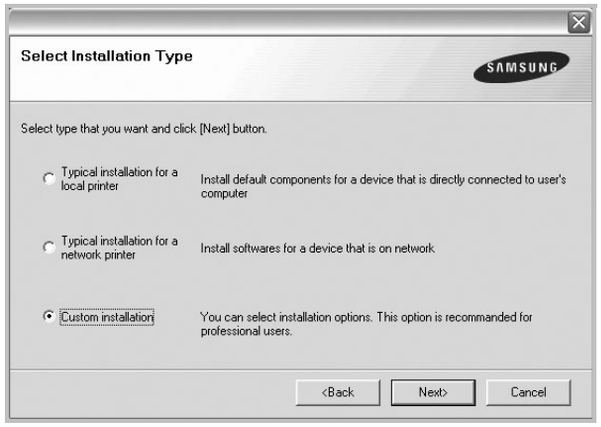

5 Select your printer and click **Next**.

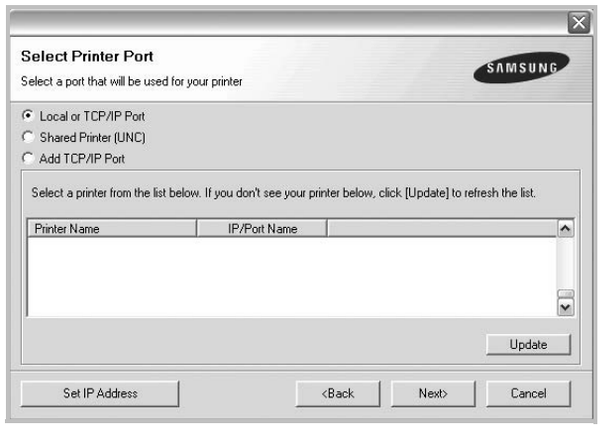

NOTE: If your printer is not already connected to the computer, the following window will appear.

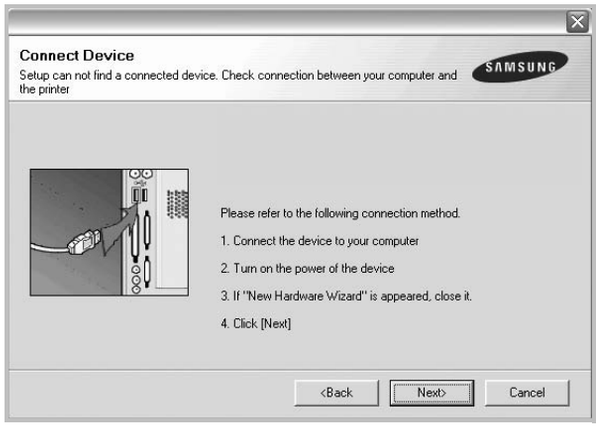

- After connecting the printer, click **Next**.
- If you don't want to connect the printer at this time, click **Next**, and **No** on the following screen. Then the installation will start and a test page will not be printed at the end of the installation.
- ***The installation window that appears in this User's Guide may differ depending on the printer and interface in use.***

6 Select the components to be installed and click **Next**.

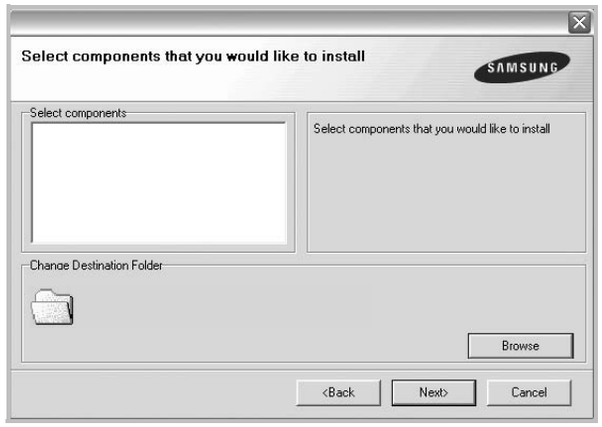

7 After the installation is finished, a window asking you to print a test page appears. If you choose to print a test page, select the checkbox and click **Next**.

Otherwise, just click **Next** and skip to step 9.

8 If the test page prints out correctly, click **Yes**.

If not, click **No** to reprint it.

9 To register yourself as a user of Samsung Printers in order to receive information from Samsung, select the checkbox and click **Finish**. You are now sent to the Samsung web site.

Otherwise, just click **Finish**.

Installing Software for Network Printing

When you connect your printer to a network, you must first configure the TCP/IP settings for the printer. After you have assigned and verified the TCP/IP settings, you are ready to install the software on each computer on the network.

You can install the printer software using the typical or custom method.

Typical Installation

This is recommended for most users. All components necessary for printer operations will be installed.

1 Make sure that the printer is connected to your network and powered on. For details about connecting to the network, see the supplied printer's User's Guide.

2 Insert the supplied CD-ROM into your CD-ROM drive.

The CD-ROM should automatically run, and an installation window appears.

If the installation window does not appear, click **Start** and then **Run**. Type **X:\Setup.exe**, replacing "**X**" with the letter which represents your drive and click **OK**.

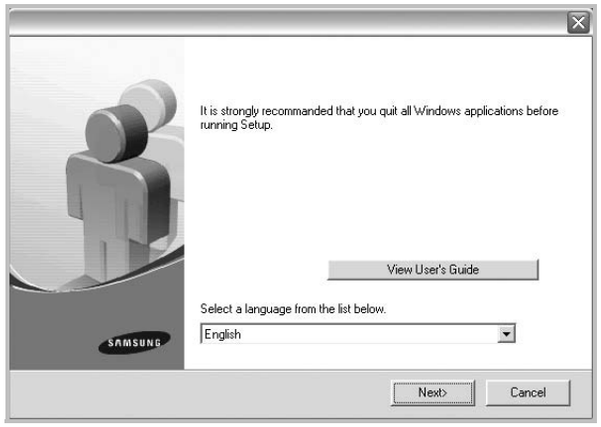

3 Click **Next**.

- If necessary, select a language from the drop-down list.
- **View User's Guide**: Allows you to view the User's Guide. If your computer doesn't have Adobe Acrobat, click on this option and it will automatically install Adobe Acrobat Reader for you.

4 Select **Typical installation for a network printer**. Click **Next**.

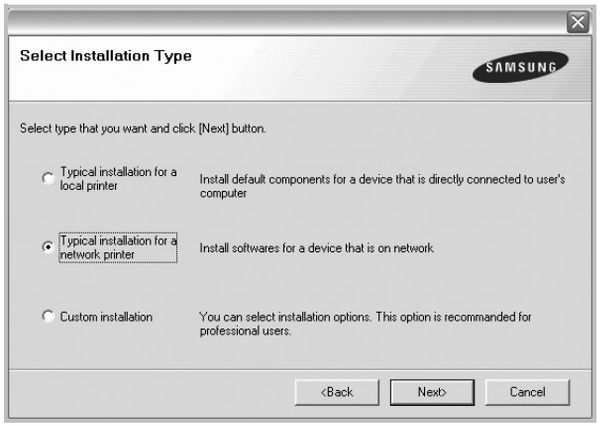

5 The list of printers available on the network appears. Select the printer you want to install from the list and then click **Next**.

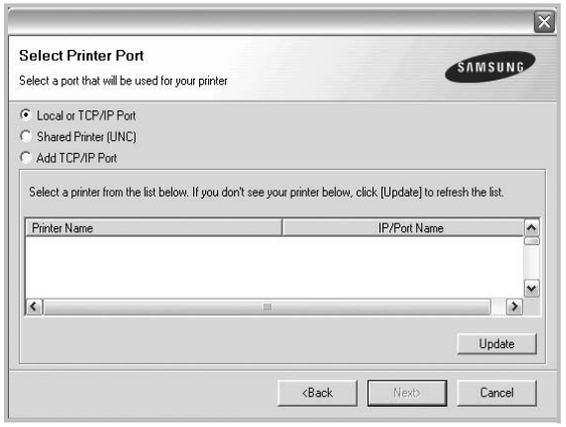

- If you do not see your printer on the list, click **Update** to refresh the list, or select **Add TCP/IP Port** to add your printer to the network. To add the printer to the network, enter the port name and the IP address for the printer.
- To find a shared network printer (UNC Path), select **Shared Printer [UNC]** and enter the shared name manually or find a shared printer by clicking the **Browse** button.

6 After the installation is finished, a window appears asking you to print a test page and to register yourself as a user of Samsung Printers in order to receive information from Samsung. If you so desire, select the corresponding checkbox(es) and click **Finish**.

Otherwise, just click **Finish**.

NOTE: After setup is complete, if your printer driver doesn't work properly, reinstall the printer driver. See "Reinstalling Printer Software" on page 11.

Custom Installation

You can choose individual components to install and set a specific IP address.

1 Make sure that the printer is connected to your network and powered on. For details about connecting to the network, see the supplied printer's User's Guide.

2 Insert the supplied CD-ROM into your CD-ROM drive.

The CD-ROM should automatically run, and an installation window appears.

If the installation window does not appear, click **Start** and then **Run**. Type **X:\Setup.exe**, replacing "**X**" with the letter which represents your drive and click **OK**.

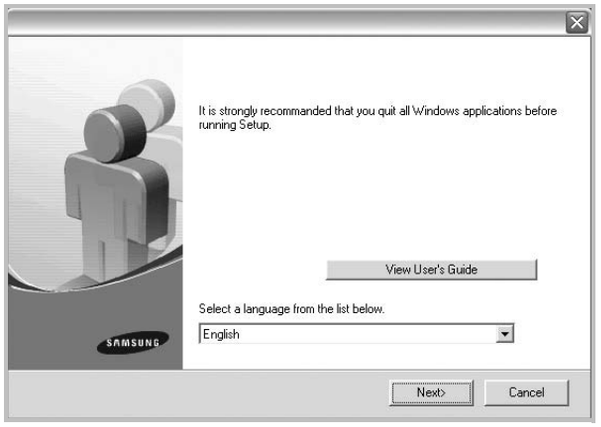

3 Click **Next**.

- If necessary, select a language from the drop-down list.
- **View User's Guide**: Allows you to view the User's Guide. If your computer doesn't have Adobe Acrobat, click on this option and it will automatically install Adobe Acrobat Reader for you.

4 Select **Custom installation**. Click **Next**.

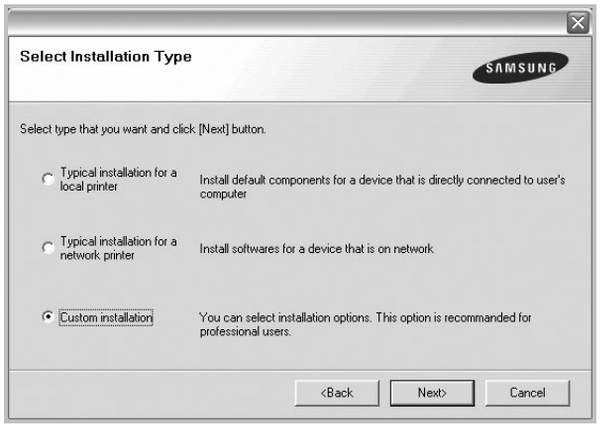

5 The list of printers available on the network appears. Select the printer you want to install from the list and then click **Next**.

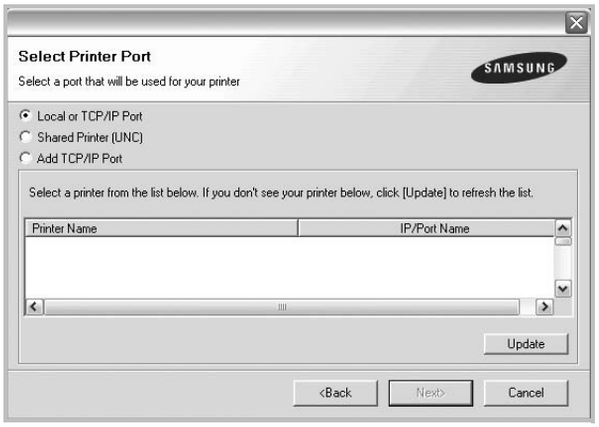

- If you do not see your printer on the list, click **Update** to refresh the list, or select **Add TCP/IP Port** to add your printer to the network. To add the printer to the network, enter the port name and the IP address for the printer.
- To find a shared network printer (UNC Path), select **Shared Printer [UNC]** and enter the shared name manually or find a shared printer by clicking the **Browse** button.

TIP: If you want to set a specific IP address on a specific network printer, click the **Set IP Address** button. The Set IP Address window appears. Do as follows:

a. Select a printer to be set with a specific IP address from the list, or enter the MAC address of the printer manually.
b. Configure an IP address, subnet mask, and gateway for the printer manually and click **Configure** to set the specific IP address for the network printer.
c. Click **Next**.

6 Select the components to be installed. After selecting the components, the following window appears. You can also change the printer name, set the printer to be shared on the network, set the printer as the default printer, and change the port name of each printer. Click **Next**.

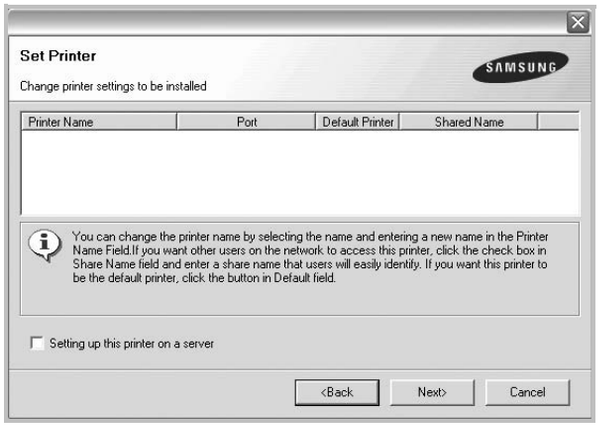

To install this software on a server, select the **Setting up this printer on a server** checkbox.

7 After the installation is finished, a window appears asking you to print a test page and to register yourself as a user of Samsung Printers in order to receive information from Samsung. If you so desire, select the corresponding checkbox(es) and click **Finish**.

Otherwise, just click **Finish**.

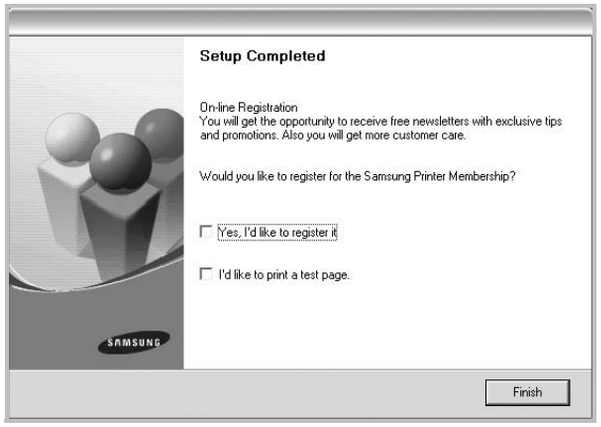

NOTE: After setup is complete, if your printer driver doesn't work properly, reinstall the printer driver. See “Reinstalling Printer Software” on page 11.

Changing the Software Language

After installation of the software, you can change the display language.

1 Click the Windows **Start** menu.
2 Select **Programs** or **All Programs** and then **your printer driver name**.
3 Select **Language Selection**.
4 Select the desired language from the language selection window, and click **OK**.

Reinstalling Printer Software

You can reinstall the software if installation fails.

1 Start Windows.
2 From the **Start** menu select **Programs** or **All Programs** → **your printer driver name** → **Maintenance**.
3 Select **Repair** and click **Next**.

   You will see a component list so that you can reinstall any item individually.

NOTE: If your printer is not already connected to the computer, the following window will appear.

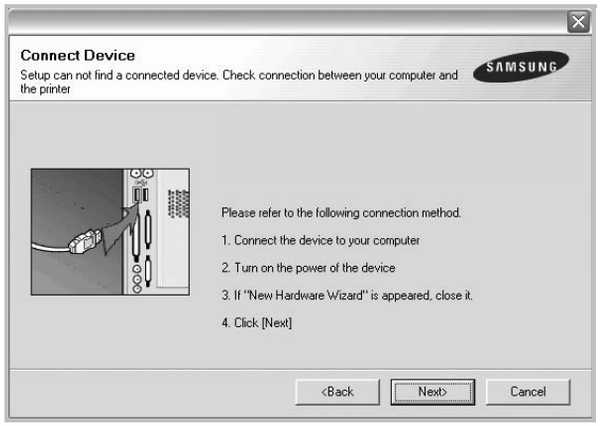

- After connecting the printer, click **Next**.
- If you don't want to connect the printer at this time, click **Next**, and **No** on the following screen. Then the installation will start and a test page will not be printed at the end of the installation.
- ***The reinstallation window that appears in this User's Guide may differ depending on the printer and interface in use.***

4 Select the components you want to reinstall and click **Next**.

   If you installed the printer software for local printing and you select **your printer driver name**, the window asking you to print a test page appears. Do as follows:

   a. To print a test page, select the check box and click **Next**.

   b. If the test page prints out correctly, click **Yes**.

      If it doesn't, click **No** to reprint it.
5 When the reinstallation is done, click **Finish**.

Removing Printer Software

1 Start Windows.
2 From the **Start** menu select **Programs** or **All Programs** → **your printer driver name** → **Maintenance**.
3 Select **Remove** and click **Next**.

   You will see a component list so that you can remove any item individually.
4 Select the components you want to remove and then click **Next**.
5 When your computer asks you to confirm your selection, click **Yes**.

   The selected driver and all of its components are removed from your computer.
6 After the software is removed, click **Finish**.

2 Basic Printing

This chapter explains the printing options and common printing tasks in Windows.

This chapter includes:

- **Printing a Document**
- **Printer Settings**
  - **Layout Tab**
  - **Paper Tab**
  - **Graphics Tab**
  - **Extras Tab**
  - **About Tab**
  - **Printer Tab**
  - **Using a Favorite Setting**
  - **Using Help**

Printing a Document

NOTE:

- Your printer driver Properties window that appears in this User's Guide may differ depending on the printer in use. However the composition of the printer properties window is similar.
- ***Check the Operating System(s) that are compatible with your printer. Please refer to the OS Compatibility section of Printer Specifications in your Printer User's Guide.***
- If you need to know the exact name of your printer, you can check the supplied CD-ROM.

The following procedure describes the general steps required for printing from various Windows applications. The exact steps for printing a document may vary depending on the application program you are using. Refer to the User's Guide of your software application for the exact printing procedure.

1. Open the document you want to print.
2. Select **Print** from the **File** menu. The Print window is displayed. It may look slightly different depending on your application.

The basic print settings are selected within the Print window. These settings include the number of copies and print range.

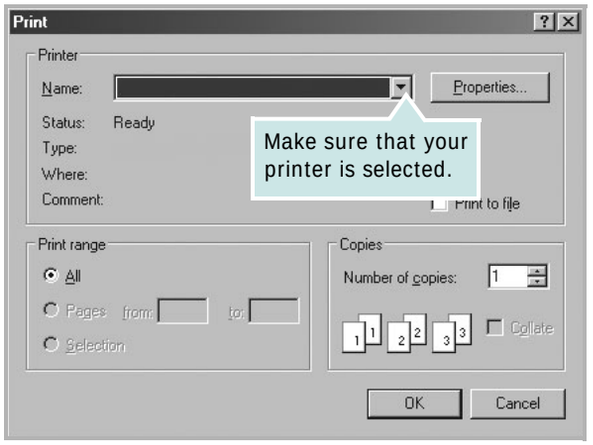

3. Select **your printer driver** from the **Name** drop-down list.
4. To take advantage of the printer features provided by your printer driver, click **Properties** or **Preferences** in the application's Print window. For details, see "Printer Settings" on page 13.

   If you see **Setup**, **Printer**, or **Options** in your Print window, click it instead. Then click **Properties** on the next screen.
5. Click **OK** to close the printer properties window.
6. To start the print job, click **OK** or **Print** in the Print window.

Printer Settings

You can use the printer properties window, which allows you to access all of the printer options you need when using your printer. When the printer properties are displayed, you can review and change the settings needed for your print job.

Your printer properties window may differ, depending on your operating system. This Software User's Guide shows the Properties window for Windows 98.

Your printer driver Properties window that appears in this User's Guide may differ depending on the printer in use.

If you access printer properties through the Printers folder, you can view additional Windows-based tabs (refer to your Windows User's Guide) and the Printer tab (see "Printer Tab" on page 16).

NOTES:

- Most Windows applications will override settings you specify in the printer driver. Change all print settings available in the software application first, and change any remaining settings using the printer driver.
- The settings you change remain in effect only while you are using the current program. **To make your changes permanent**, make them in the Printers folder.
- The following procedure is for Windows XP. For other Windows OS, refer to the corresponding Windows User's Guide or online help.
  1. Click the Windows **Start** button.
  2. Select **Printers and Faxes**.
  3. Select **your printer driver icon**.
  4. Right-click on the printer driver icon and select **Printing Preferences**.
  5. Change the settings on each tab, click OK.

Layout Tab

The **Layout** tab provides options to adjust how the document appears on the printed page. The **Layout Options** includes **Multiple Pages per Side** and **Poster**. See "Printing a Document" on page 12 for more information on accessing printer properties.

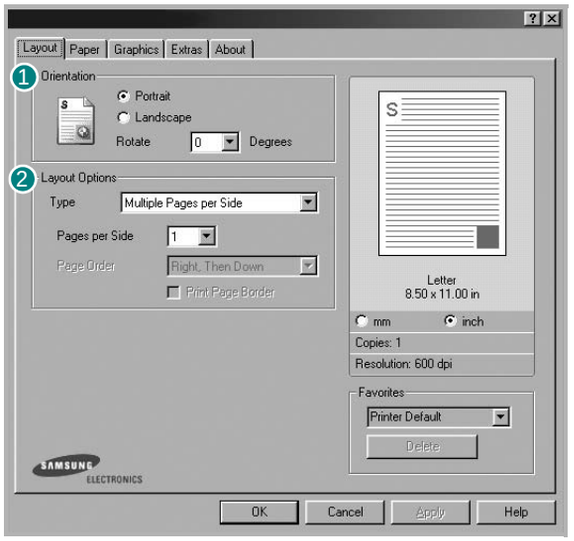

❶ Orientation

Orientation allows you to select the direction in which information is printed on a page.

- **Portrait** prints across the width of the page, letter style.
- **Landscape** prints across the length of the page, spreadsheet style.
- **Rotate** allows you to rotate the page the selected degrees.

▲ Portrait

▲ Landscape

❷ Layout Options

Layout Options allows you to select advanced printing options. You can choose **Multiple Pages per Side** and **Poster**.

- For details, see "Printing Multiple Pages on One Sheet of Paper (N-Up Printing)" on page 18.
- For details, see "Printing Posters" on page 19

Paper Tab

Use the following options to set the basic paper handling specifications when you access the printer properties. See “Printing a Document” on page 12 for more information on accessing printer properties.

Click the **Paper** tab to access various paper properties.

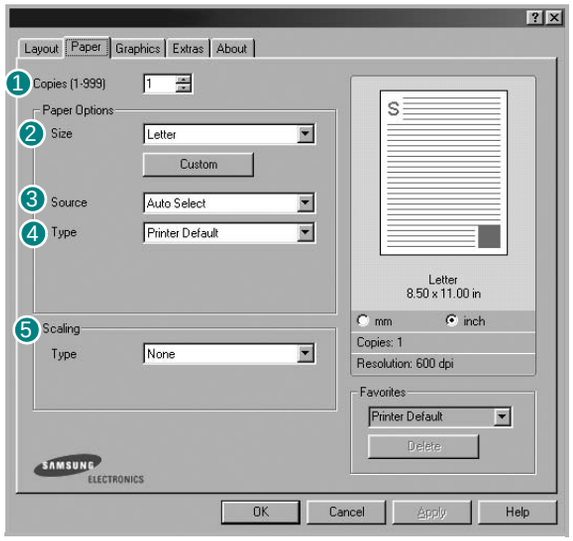

❶ Copies

Copies allows you to choose the number of copies to be printed. You can select 1 to 999 copies.

❷ Size

Size allows you to set the size of paper you loaded in the tray. If the required size is not listed in the **Size** box, click **Custom**. When the **Custom Page Size** window appears, set the paper size and click **OK**. The setting appears in the list so that you can select it.

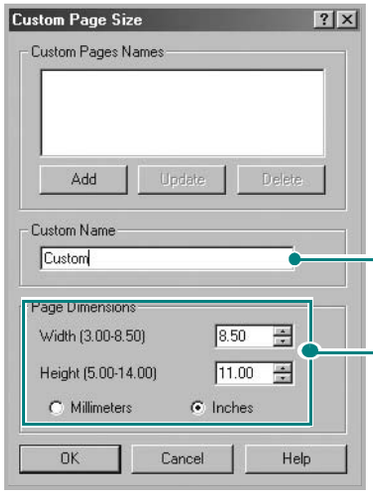

❸ Source

Make sure that **Source** is set to the corresponding paper tray. Use the **Manual Feed** source when printing to special material. You have to load one sheet at a time into the Multi-purpose Tray. If the paper source is set to **Auto Select**, the printer automatically picks up print material in the following order: Multi-purpose Tray, Tray1, Optional Tray2.

❹ Type

Make sure that **Type** is set to **Printer Default**. If you load a different type of print material, select the corresponding paper type. If you use 20lb to 24lb (75~90g/m^2) cotton paper, such as Gilbert 25% and Gilbert 100%, set the paper type to **Cotton** for best printing. To use recycled paper, select **Recycled Paper**.

First Page

This property allows you to print the first page using a different paper type from the rest of the document. You can select the paper source for the first page.
For example, load thick stock for the first page into the Multi-purpose Tray, and plain paper into Tray1. Then, select **Tray1** in the **Source** option and **Multi-Purpose Tray** in the **First Page** option.

❺ Scaling

Scaling allows you to automatically or manually scale your print job on a page. You can choose from **None**, **Reduce/Enlarge**, and **Fit to Page**.

- For details, see “Printing a Reduced or Enlarged Document” on page 21.
- For details, see “Fitting Your Document to a Selected Paper Size” on page 21.

Graphics Tab

Use the following Graphic options to adjust the print quality for your specific printing needs. See “Printing a Document” on page 12 for more information on accessing printer properties.

Click the **Graphics** tab to display the properties shown below..

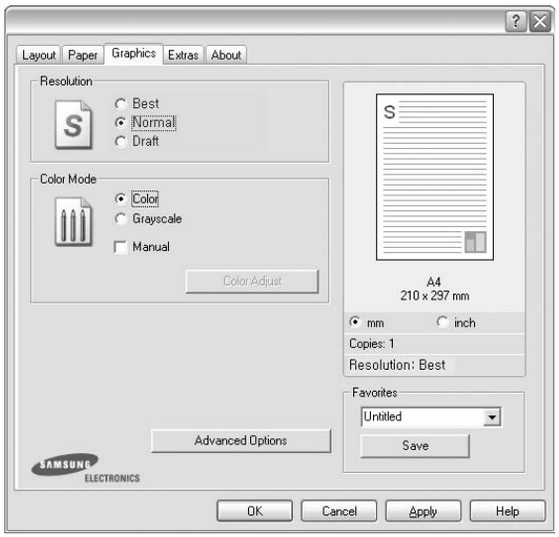

❶ Resolution

You can select the printing resolution by choosing **Best, Normal** or **Draft**. The higher the setting, the sharper the clarity of printed characters and graphics. The higher setting also may increase the time it takes to print a document.

❷ Color Mode

You can choose color options. Setting to **Color** typically produces the best possible print quality for color documents. If you want to print a color document in grayscale, select **Grayscale**. If you want to adjust the color options manually, select **Manual** and click the **Color Adjust** button.

❸ Color Adjust

In the Color Adjust window, you can change the appearance of a document’s images.

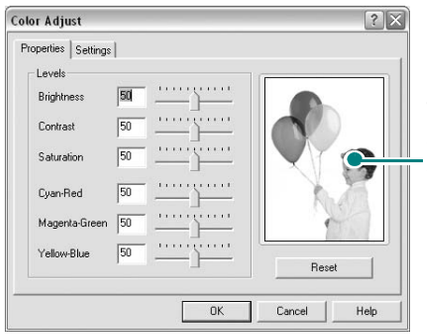

The preview image shows a sample page with the settings you have specified.

- **Properties**: You can adjust the appearance of images by changing the settings in the **Levels** option.
- **Settings**: You can match the printer output colors to the colors on your screen in the **Color Matching** option.

❹ Advanced Options

You can set advanced settings by clicking the **Advanced Options** button.

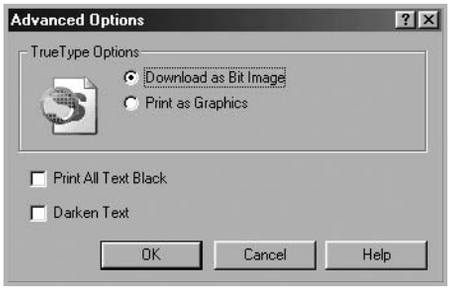

- **TrueType Options**: This option determines what the driver tells the printer about how to image the text in your document. Select the appropriate setting according to the status of your document. ***This option is available only when you use Windows 9x/Me.***
  - **Download as Bit Image**: When this option is selected, the driver will download the font data as bitmap images. Documents with complicated fonts, such as Korean or Chinese, or various other fonts, will print faster in this setting.
  - **Print as Graphics**: When this option is selected, the driver will download any fonts as graphics. When printing documents with high graphic content and relatively few TrueType fonts, printing performance (speed) may be enhanced in this setting.
- **Print All Text Black**: When the **Print All Text Black** option is checked, all text in your document prints solid black, regardless of the color it appears on the screen. When not checked, colored text prints in shades of gray.
- **Darken Text**: When the **Darken Text** option is checked, all text in your document is allowed to print darker than on a normal document.

Extras Tab

You can select output options for your document. See “Printing a Document” on page 12 for more information about accessing the printer properties.

Click the **Extras** tab to access the following feature:

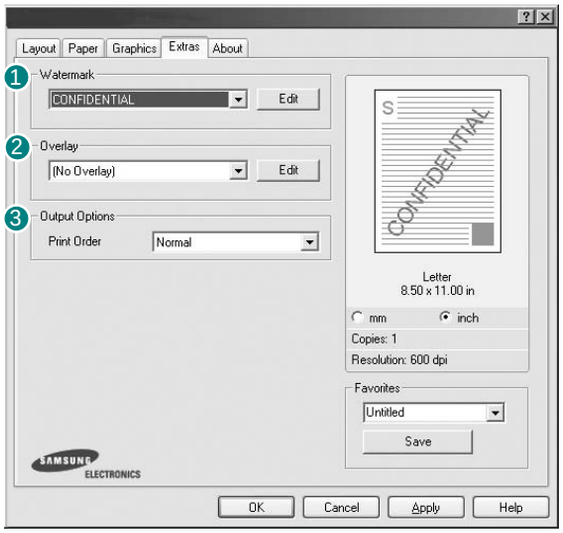

❶ Watermark

You can create a background text image to be printed on each page of your document. For details, see “Using Watermarks” on page 22.

❷ Overlay

Overlays are often used to take the place of preprinted forms and letterhead paper. For details, see “Using Overlays” on page 23.

❸ Output Options

- **Print Order**: You can set the sequence in which the pages print. Select the print order from the drop-down list.
  - **Normal**: Your printer prints all pages from the first page to the last page.
  - **Reverse All Pages**: Your printer prints all pages from the last page to the first page.
  - **Print Odd Pages**: Your printer prints only the odd numbered pages of the document.
  - **Print Even Pages**: Your printer prints only the even numbered pages of the document.
- **Reprint When Jammed**: When this option is checked, the printer retains the image of a printed page until the printer signals that the page has successfully exited the printer. If a paper jam occurs, the printer will reprint the last page sent from the computer after you have cleared the jam.

About Tab

Use the **About** tab to display the copyright notice and the version number of the driver. If you have an Internet browser, you can connect to the Internet by clicking on the web site icon. See “Printing a Document” on page 12 for more information about accessing printer properties.

Printer Tab

If you access printer properties through the **Printers** folder, you can view the **Printer** tab. You can set the printer configuration.

The following procedure is for Windows XP. For other Windows OS, refer to the corresponding Windows User's Guide or online help.

1. Click the Windows **Start** menu.
2. Select **Printers and Faxes**.
3. Select **your printer driver** icon.
4. Right-click on the printer driver icon and select **Properties**.
5. Click the **Printer** tab and set the options.

Using a Favorite Setting

The **Favorites** option, which is visible on each properties tab, allows you to save the current properties settings for future use.

To save a **Favorites** item:

1. Change the settings as needed on each tab.
2. Enter a name for the item in the **Favorites** input box.

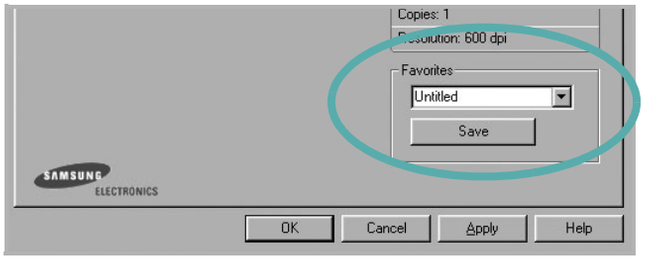

3. Click **Save**.

   When you save **Favorites**, all current driver settings are saved.

To use a saved setting, select the item from the **Favorites** drop down list. The printer is now set to print according to the Favorites setting you selected.

To delete a Favorites item, select it from the list and click **Delete**.

You can also restore the printer driver's default settings by selecting **Printer Default** from the list.

Using Help

Your printer has a help screen that can be activated by clicking the **Help** button in the printer properties window. These help screens give detailed information about the printer features provided by the printer driver.

You can also click ? from the upper right corner of the window, and then click on any setting.

3 Advanced Printing

This chapter explains printing options and advanced printing tasks.

NOTE:

- Your printer driver **Properties** window that appears in this User's Guide may differ depending on the printer in use. However the composition of the printer properties window is similar.
- If you need to know the exact name of your printer, you can check the supplied CD-ROM.

This chapter includes:

- **Printing Multiple Pages on One Sheet of Paper (N-Up Printing)**
- **Printing Posters**
- **Printing Booklets**
- **Printing on Both Sides of Paper (Manual Duplex)**
- **Printing a Reduced or Enlarged Document**
- **Fitting Your Document to a Selected Paper Size**
- **Using Watermarks**
- **Using Overlays**

Printing Multiple Pages on One Sheet of Paper (N-Up Printing)

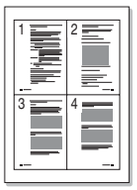

You can select the number of pages to print on a single sheet of paper. To print more than one page per sheet, the pages will be reduced in size and arranged in the order you specify. You can print up to 16 pages on one sheet.

1. To change the print settings from your software application, access printer properties. See "Printing a Document" on page 12.
2. From the **Layout** tab, choose **Multiple Pages per Side** in the **Type** drop-down list.
3. Select the number of pages you want to print per sheet (1, 2, 4, 6, 9, or 16) in the **Pages per Side** drop-down list.

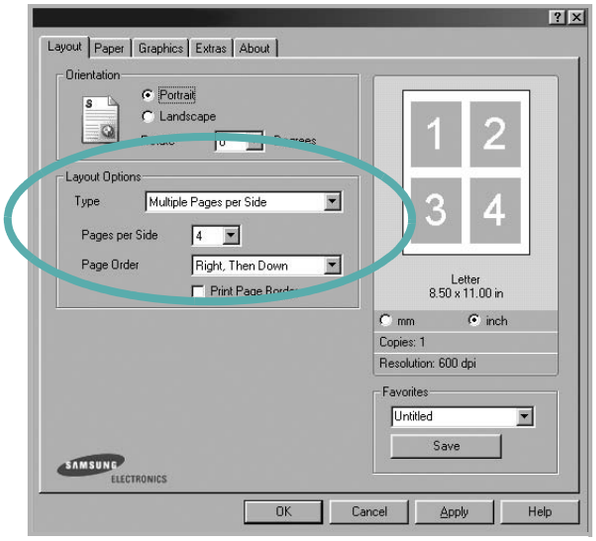

4. Select the page order from the **Page Order** drop-down list, if necessary.

   Check **Print Page Border** to print a border around each page on the sheet.
5. Click the **Paper** tab, select the paper source, size, and type.
6. Click **OK** and print the document.

Printing Posters

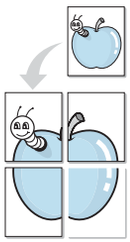

This feature allows you to print a single-page document onto 4, 9, or 16 sheets of paper, for the purpose of pasting the sheets together to form one poster-size document.

1 To change the print settings from your software application, access printer properties. See “Printing a Document” on page 12.

2 Click the **Layout** tab, select **Poster** in the **Type** drop-down list.

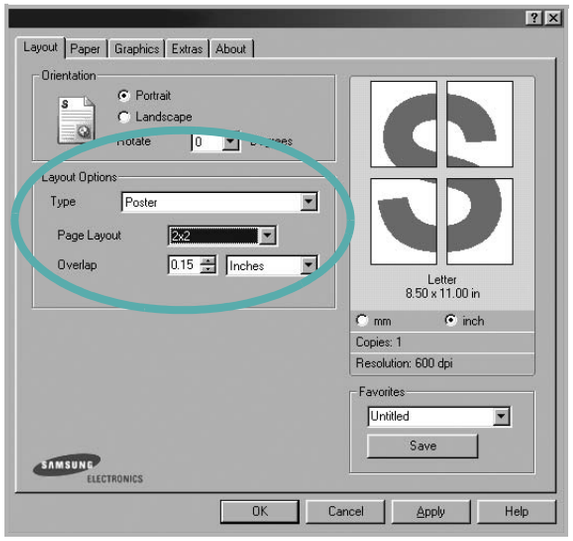

3 Configure the poster option:

You can select the page layout from **2x2**, **3x3**, or **4x4**. If you select **2x2**, the output will be automatically stretched to cover 4 physical pages.

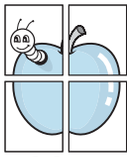

▲ 2x2

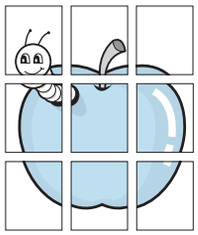

▲ 3x3

Specify an overlap in millimeters or inches to make it easier to pasting the sheets together.

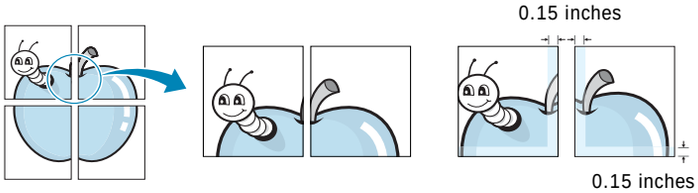

4 Click the **Paper** tab, select the paper source, size, and type.

5 Click **OK** and print the document. You can complete the poster by pasting the sheets together.

Printing Booklets

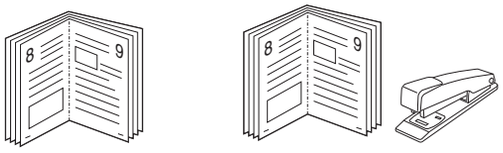

This printer feature allows you to print your document on both sides of the paper and arranges the pages so that the paper can be folded in half after printing to produce a booklet.

1 To change the print settings from your software application, access the printer properties. See “Printing a Document” on page 12.

2 From the **Layout** tab, choose **Booklet Printing** from the **Type** drop-down list.

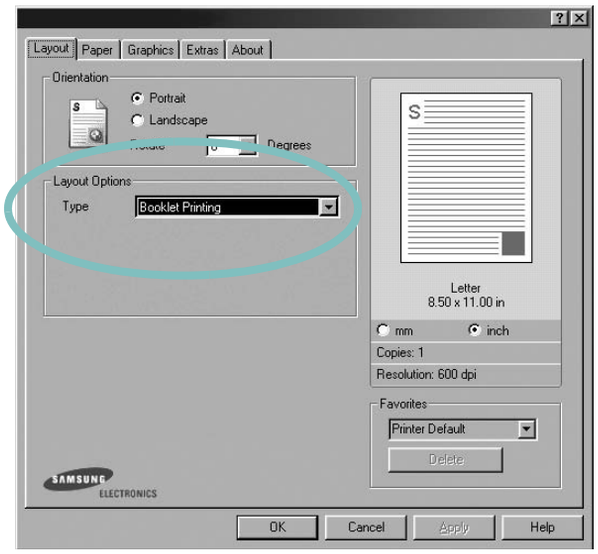

NOTE: The booklet printing option is available when A4, Letter, Legal, or Folio size is selected in the **Size** option on the **Paper** tab.

3 Click the **Paper** tab, and select the paper source, size, and type.

4 Click **OK** and print the document.

5 After printing, fold and staple the pages.

Printing on Both Sides of Paper (Manual Duplex)

You can print on both sides of a sheet of paper manually. Before printing, decide how you want your document oriented.

The options are:

- **Long Edge**, which is the conventional layout used in book binding.
- **Short Edge**, which is the type often used with calendars.

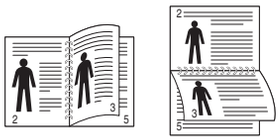

▲ Long Edge

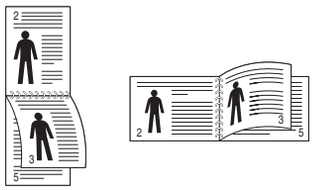

▲ Short Edge

NOTE:

- Do not print on both sides of labels, transparencies, envelopes, or thick paper. Paper jamming and damage to the printer may result.
- To use double-sided printing, you can use only the following paper sizes: A4, Letter, Legal, and Folio, with a weight of 20~24 lbs (75~90 g/m²).

To manually print a 2-sided document:

1. To change the print settings from your software application, access printer properties. “Printing a Document” on page 12.
2. From the **Layout** tab, select the paper orientation.
3. From the **Double-sided Printing** section, select either **None**, **Long Edge**, or **Short Edge**.

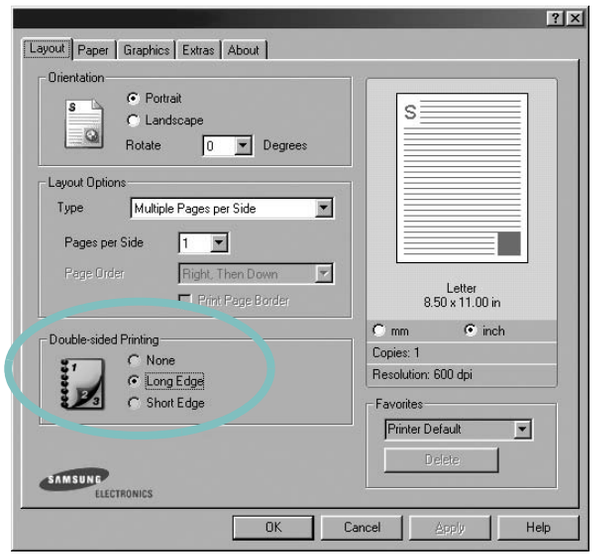

4. Click the **Paper** tab and select the paper source, size, and type.
5. Click **OK** and print the document.

   The printer prints every other page of the document first.
6. Once the first side of your job has printed, the Printing Tip window appears. Follow the on-screen instructions to complete the printing job.

Printing a Reduced or Enlarged Document

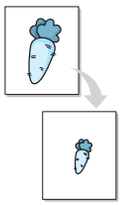

You can change the size of a page's content to appear larger or smaller on the printed page.

1 To change the print settings from your software application, access printer properties. See "Printing a Document" on page 12.

2 From the **Paper** tab, select **Reduce / Enlarge** in the **Type** drop-down list.

3 Enter the scaling rate in the **Percentage** input box.

You can also click the ▼ or ▲ button.

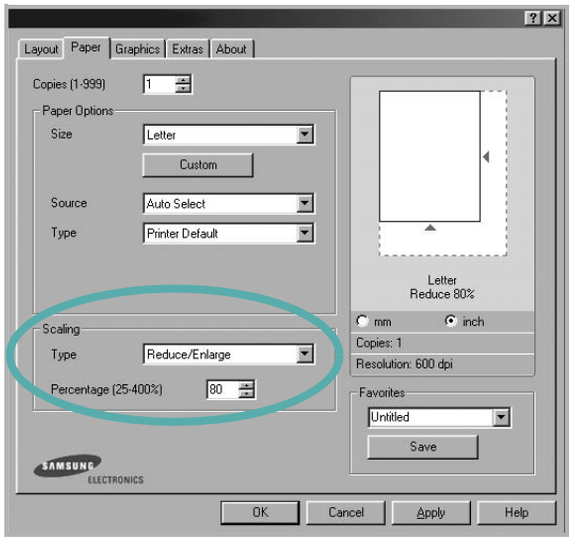

4 Select the paper source, size, and type in **Paper Options**.

5 Click **OK** and print the document.

Fitting Your Document to a Selected Paper Size

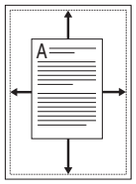

This printer feature allows you to scale your print job to any selected paper size regardless of the digital document size. This can be useful when you want to check fine details on a small document.

1 To change the print settings from your software application, access printer properties. See "Printing a Document" on page 12.

2 From the **Paper** tab, select **Fit to Page** in the **Type** drop-down list.

3 Select the correct size from the **Target Page** drop-down list.

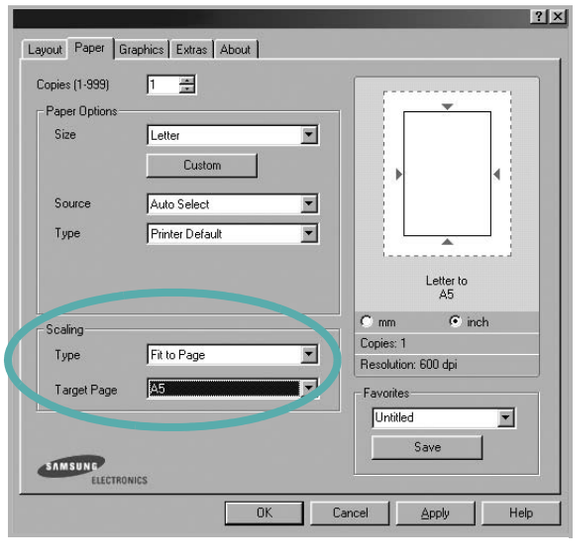

4 Select the paper source, size, and type in **Paper Options**.

5 Click **OK** and print the document.

Using Watermarks

The Watermark option allows you to print text over an existing document. For example, you may want to have large gray letters reading “DRAFT” or “CONFIDENTIAL” printed diagonally across the first page or all pages of a document.

There are several predefined watermarks that come with the printer, and they can be modified, or you can add new ones to the list.

Using an Existing Watermark

1 To change the print settings from your software application, access printer properties. See “Printing a Document” on page 12.

2 Click the **Extras** tab, and select the desired watermark from the **Watermark** drop-down list. You will see the selected watermark in the preview image.

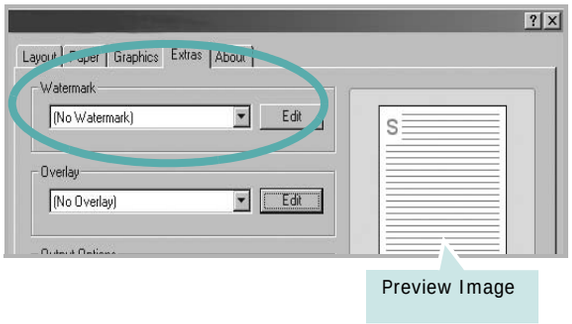

3 Click **OK** and start printing.

NOTE: The preview image shows how the page will look when it is printed.

Creating a Watermark

1 To change the print settings from your software application, access printer properties. See “Printing a Document” on page 12.

2 Click the **Extras** tab, and click the **Edit** button in the **Watermark** section. The **Edit Watermark** window appears.

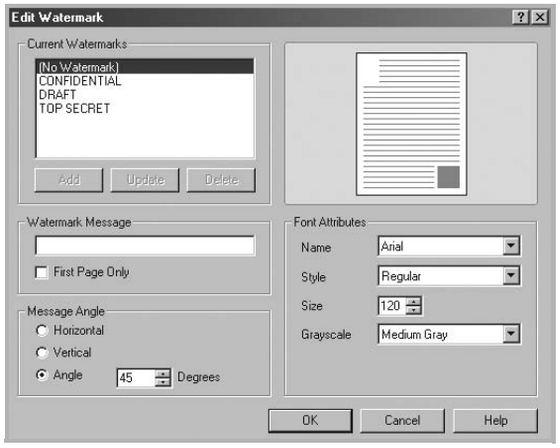

3 Enter a text message in the **Watermark Message** box. You can enter up to 40 characters. The message displays in the preview window.

When the **First Page Only** box is checked, the watermark prints on the first page only.

4 Select watermark options.

You can select the font name, style, size, or grayscale level from the **Font Attributes** section and set the angle of the watermark from the **Message Angle** section.

5 Click **Add** to add a new watermark to the list.

6 When you have finished editing, click **OK** and start printing.

To stop printing the watermark, select **<No Watermark>** from the **Watermark** drop-down list.

Editing a Watermark

1. To change the print settings from your software application, access printer properties. See “Printing a Document” on page 12.
2. Click the **Extras** tab and click the **Edit** button in the **Watermark** section. The **Edit Watermark** window appears.
3. Select the watermark you want to edit from the **Current Watermarks** list and change the watermark message and options.
4. Click **Update** to save the changes.
5. Click **OK** until you exit the Print window.

Deleting a Watermark

1. To change the print settings from your software application, access printer properties. See “Printing a Document” on page 12.
2. From the **Extras** tab, click the **Edit** button in the Watermark section. The **Edit Watermark** window appears.
3. Select the watermark you want to delete from the **Current Watermarks** list and click **Delete**.
4. Click **OK** until you exit the Print window.

Using Overlays

What is an Overlay?

An overlay is text and/or images stored in the computer hard disk drive (HDD) as a special file format that can be printed on any document. Overlays are often used to take the place of preprinted forms and letterhead paper. Rather than using preprinted letterhead, you can create an overlay containing the exact same information that is currently on your letterhead. To print a letter with your company’s letterhead, you do not need to load preprinted letterhead paper in the printer. You need only tell the printer to print the letterhead overlay on your document.

Creating a New Page Overlay

To use a page overlay, you must create a new page overlay containing your logo or image.

1. Create or open a document containing text or an image for use in a new page overlay. Position the items exactly as you wish them to appear when printed as an overlay.
2. To save the document as an overlay, access printer properties. See “Printing a Document” on page 12.
3. Click the **Extras** tab, and click **Edit** button in the **Overlay** section.

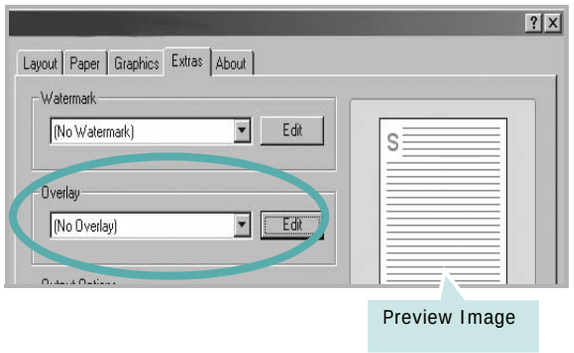

4 In the Edit Overlay window, click **Create Overlay**.

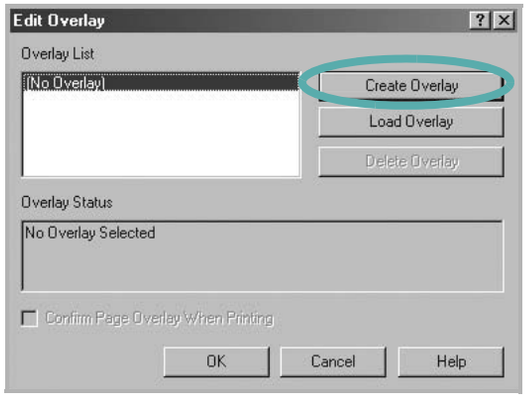

5 In the Create Overlay window, type a name of up to eight characters in the **File name** box. Select the destination path, if necessary. (The default is C:\Formover).

6 Click **Save**. The name appears on the **Overlay List** box.

7 Click **OK** or **Yes** to finish creating.

The file is not printed. Instead it is stored on your computer hard disk drive.

NOTE: The overlay document size must be the same as the documents you print with the overlay. Do not create an overlay with a watermark.

Using a Page Overlay

After an overlay has been created, it is ready to be printed with your document. To print an overlay with a document:

1 Create or open the document you want to print.

2 To change the print settings from your software application, access printer properties. See “Printing a Document” on page 12.

3 Click the **Extras** tab.

4 Select the desired overlay from the **Overlay** drop-down list box.

5 If the overlay file you want does not appear in the **Overlay** list, click **Edit** button and **Load Overlay**, and select the overlay file.

If you have stored the overlay file you want to use in an external source, you can also load the file when you access the **Load Overlay** window.

After you select the file, click **Open**. The file appears in the **Overlay List** box and is available for printing. Select the overlay from the **Overlay List** box.

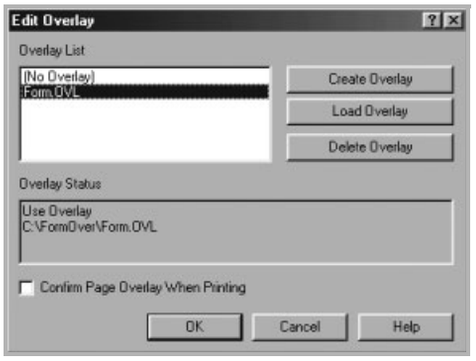

6 If necessary, click **Confirm Page Overlay When Printing**. If this box is checked, a message window appears each time you submit a document for printing, asking you to confirm your wish to print an overlay on your document.

If this box is not checked and an overlay has been selected, the overlay automatically prints with your document.

7 Click **OK** or **Yes** until printing begins.

The selected overlay downloads with your print job and prints on your document.

NOTE: The resolution of the overlay document must be the same as that of the document you will print with the overlay.

Deleting a Page Overlay

You can delete page overlays that you no longer use.

1 In the printer properties window, click the **Extras** tab.
2 Click the **Edit** button in the **Overlay** section.
3 Select the overlay you want to delete from the **Overlay List** box.
4 Click **Delete Overlay**.
5 When a confirming message window appears, click **Yes**.
6 Click **OK** until you exit the Print window.

4 Sharing the Printer Locally

You can connect the printer directly to a selected computer, which is called “host computer,” on the network.

The following procedure is for Windows XP. For other Windows OS, refer to the corresponding Windows User's Guide or online help.

NOTES:
- Check the Operating System(s) that are compatible with your printer. Please refer to the OS Compatibility section of Printer Specifications in your Printer User’s Guide.
- If you need to know the exact name of your printer, you can check the supplied CD-ROM.

Setting Up a Host Computer

1. Start Windows.
2. From the **Start** menu select **Printers and Faxes**.
3. Double-click **your printer driver icon**.
4. From the **Printer** menu, select **Sharing**.
5. Check the **Share this printer** box.
6. Fill in the **Shared Name** field, and then click **OK**.

Setting Up a Client Computer

1. Right-click the Windows **Start** button and select **Explorer**.
2. Open your network folder in the left column.
3. Click the shared name.
4. From the **Start** menu select **Printers and Faxes**.
5. Double-click **your printer driver icon**.
6. From the **Printer** menu, select **Properties**.
7. From the **Ports** tab, click **Add Port**.
8. Select **Local Port** and click **New Port**.
9. Fill in the **Enter a port name** field with the shared name.
10. Click **OK** and click **Close**.
11. Click **Apply** and click **OK**.

5 Using Smart Panel

Smart Panel is a program that monitors and informs you of the status of the printer, and allows you to customize the printer's settings. Smart Panel is installed automatically when you install the printer software. For details, See "Installing Printer Software" on page 4.

NOTES:

- To use the this program, you need:
  - a USB or network connection
  - Windows 98 or higher (Windows NT 4.0 can be used only for network-supported printers.) To check for Operating System(s) that are compatible with your printer, refer to Printer Specifications in your Printer User's Guide.
  - Internet Explorer version 5.0 or higher for flash animation in HTML Help.
- If you need to know the exact name of your printer, you can check the supplied CD-ROM.

Understanding Smart Panel

If an error occurs while printing, Smart Panel appears automatically, showing the error. You can also launch Smart Panel manually from the Windows task bar. Double-click the Smart Panel icon on the Windows task bar.

Or, from the **Start** menu, select **Programs** or **All Programs** → **your printer driver name** → **Smart Panel**.

NOTES:

- If you have already installed more than one Samsung printer, first select the printer model you want in order to use the corresponding Smart Panel. Right-click the Smart Panel icon on the Windows task bar and select **your printer name**.
- The Smart Panel window and its contents shown in this User's Guide may differ depending on the printer in use.

The Smart Panel program displays the current status of the printer (Printer Ready, Printer Offline, or Error-Check Printer) and the level of toner remaining in the toner cartridge(s).

❶ Toner Level
You can view the level of toner remaining in the toner cartridge(s). The printer and the number of the toner cartridge(s) shown above window may differ depending on the printer in use.

❷ Buy Now
You can order replacement toner cartridges online.

❸ Troubleshooting Guide
You can view HTML help to solve problems.

❹ Printer Setting
You can configure various printer settings in the Printer Settings Utility window. For details, see "Using Printer Settings Utility" on page 28.

❺ Driver Setting
You can use the printer properties window, which allows you to access all of the printer options you need for using your printer. For details, See "Printer Settings" on page 13.

Opening the Troubleshooting Guide

Using the troubleshooting guide, you can view solutions for error status problems.

Right-click the Smart Panel icon on the Windows task bar and select **Troubleshooting Guide**.

Using Printer Settings Utility

Using Printer Settings Utility, you can configure and check print settings.

1 Right-click the Smart Panel icon on the Windows task bar and select **Printer Setting**.

Or, from the **Start** menu, select **Programs** or **All Programs** → **your printer driver name** → **Printer Settings Utility**.

NOTE: The Printer Settings Utility window and its contents shown in this User's Guide may differ depending on the printer in use.

2 Change the settings. For details on each setting option, see below.

3 To send the changes to the printer, click the **Send** button.

Setting Tab

You can adjust various printer settings.

- **Power Save**: When the printer has not received data for an extended period of time, power consumption is automatically lowered. You can set how long the printer waits before going to power save mode.
- **Auto Continue**: You can select whether or not the printer continues printing when it detects paper that doesn't match to your paper setting.
- **JAM Recovery**: You can select how the printer behaves when a paper jam occurs.
- **Altitude Adjustment**: You can optimize the print quality according to the altitude.

Color Tab

You can adjust the color settings.

- **Manual Color Adjustment**: You can manually adjust the color contrast for each cartridge.
- **Auto Color Calibration**: When this option is checked, the printer automatically calibrates itself to produce the best possible print quality for color documents.
- **Auto Color Registration**: If colored text or graphics don't print in the correct position, i.e., are offset from their proper location within a document, this option re-sites those items correctly. Click **Run Now** to execute the auto color registration now.

Check Tab

You can view the total number of images that have been printed with each of the consumable items.

Click **Configuration Print** or **Test Print** to print a configuration page or a demo page.

Changing the Smart Panel Program Settings

Right-click the Smart Panel icon on the Windows task bar and select **Options**.

The following window opens.

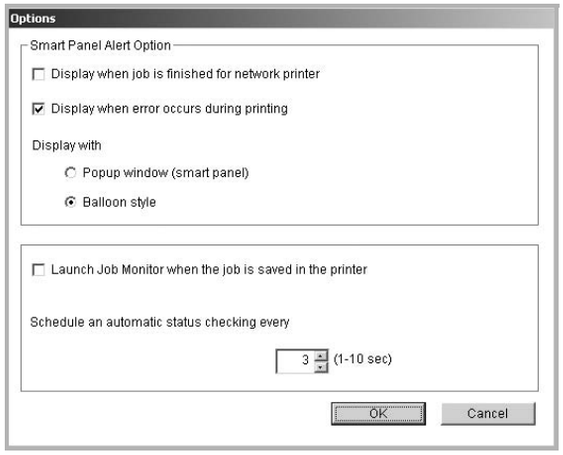

- **Display when job is finished for network printer**: The computer shows the Smart Panel popup window or balloon when your job is complete. ***(Only for a network supported printer.)***
- **Display when error occurs during printing**: The computer shows the Smart Panel popup window or balloon when an error occurs during printing.
- **Display with**: You can select how the computer shows you a message. If you select **Popup window (smart panel)**, the message appears in the Smart Panel pop window.
- **Launch Job Monitor when the job is saved in the printer**: If you store print jobs on the printer's hard disk, the computer opens the Job Monitor window. ***(Only for a network supported printer with a built-in hard disk.)***
- **Schedule an automatic status checking every**: The computer updates the printer status regularly. Setting the value close to 1 second causes the computer to check the printer status more frequently, thereby allowing a faster response to any printer error.

6 Using Your Printer in Linux

You can use your printer in a Linux environment.

This chapter includes:

- **System Requirements**
- **Installing the Printer Driver**
- **Changing the Printer Connection Method**
- **Uninstalling the Printer Driver**
- **Using the Configuration Tool**
- **Changing LLPR Properties**

System Requirements

Supported OS

- Redhat 6.2/7.0/7.1 and above
- Linux Mandrake 7.1/8.0 and above
- SuSE 6.4/7.0/7.1 and above
- Debian 2.2 and above
- Caldera OpenLinux 2.3/2.4 and above
- Turbo Linux 6.0 and above
- Slackware 7.0/7.1 and above

Recommended Capacities

- Pentium IV 1 GHz or higher
- RAM 256 MB or higher
- HDD 1 GB or higher

Software

- Glibc 2.1 or higher
- GTK+ 1.2 or higher
- GhostScript

NOTES:

- The Linux printer's properties window that appears in this User's Guide may differ depending on the printer in use. However the composition of the properties is similar.
- ***You can check your printer name in the supplied CD-ROM.***

Installing the Printer Driver

1 Make sure that you connect the printer to your computer. Turn both the computer and the printer on.

2 When the Administrator Login window appears, type in "**root**" in the **Login** field and enter the system password.

NOTE: You must log in as a super user (root) to install the printer software. If you are not a super user, ask your system administrator.

3 Insert the printer software CD-ROM. The CD-ROM automatically runs.

NOTE: If the CD-ROM does not automatically run, click the icon at the bottom of the window. When the Terminal screen appears, type in:
[root@local /root]# **cd /mnt/cdrom** (the CD-ROM directory)
[root@local cdrom]# **./setup.sh**

4 Select the type of installation, either **Recommended** or **Expert**, and then click **Continue**.

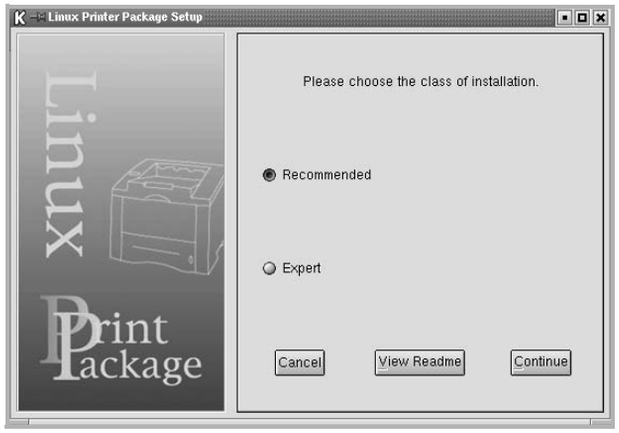

Recommended is fully automated and does not require any interaction. **Expert** installation allows you to select the install path or printing system.

5 If you selected **Recommended**, go to step 6.

For **Expert**, select the desired option and then click **Begin Install**.

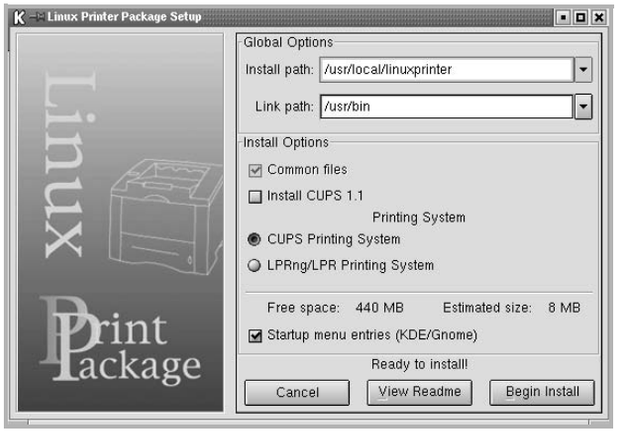

6 The printer driver installation begins. When the installation is completed, click **Start**.

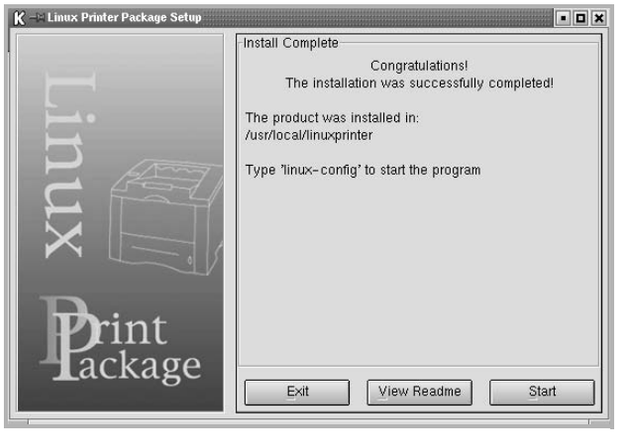

7 The Linux Printer Configuration window opens. Click the **Add Printer** icon on the toolbar at the top of the window.

NOTE: Depending on the printing system in use, the Administrator Login window may appear. Type in "**root**" in the **Login** field and enter the system password.

8 You see the printers currently installed in your system. Select the printer you want to use. The function tabs available for the selected printer appear at the top of the Add a Printer window.

NOTE: If the printer supports PS printing, it is recommended to select the PS driver.

9 Click the **Connection** tab and ensure that the printer port is set properly. If it is not, change the device setting.

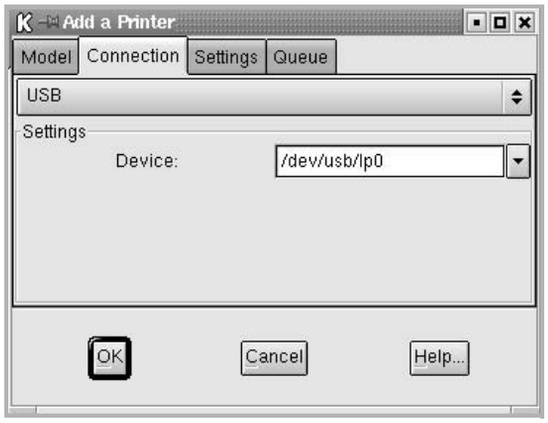

10 You can use the **Settings** tab and the **Queue** tab to view the printer's current settings. If necessary, you can change the settings.

NOTE: Options may differ depending on the printer in use. The **Description** and the **Location** field in the Queue screen may not appear depending on the printing system in use.

11 To exit, click **OK**.

12 When the window indicates that the new printer is successfully configured, click **OK**.

13 The Linux Printer Configuration window reappears. From the **Info** tab, you can view information about your printer driver. If necessary, you can change the printer's configuration. For details about changing the printer's configuration, see "Using the Configuration Tool" on page 32.

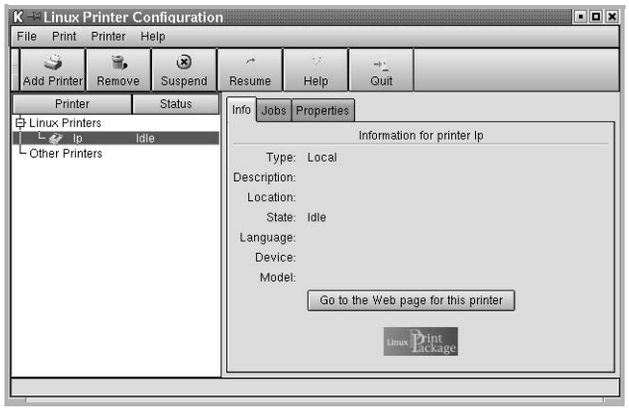

Changing the Printer Connection Method

If you change the printer connection method from USB to parallel or vice versa while in use, you must reconfigure your Linux printer by adding the printer to your system. Take the following steps:

1 Make sure that you connect the printer to your computer. Turn both the computer and the printer on.

2 When the Administrator Login window appears, type in "**root**" in the Login field and enter the system password.

NOTE: You must log in as a super user (root) to install a new printer to the printing system. If you are not a super user, ask your system administrator.

3 From the Startup Menu icon at the bottom of the desktop, select **Linux Printer** and then **Configuration Tool**.

You can also access the Linux Printer Configuration window by typing in "**linux-config**" from the Terminal screen.

4 When the Linux Printer Configuration window appears, click the **Add Printer** icon on the toolbar at the top of the window.

5 Click the **Connection** tab at the top of the Add a Printer window.

Ensure that the printer port is set properly. If it is not, change the device setting.

6 Click **OK**.

Uninstalling the Printer Driver

1 From the Startup Menu icon at the bottom of the desktop, select **Linux Printer** and then **Configuration Tool**.

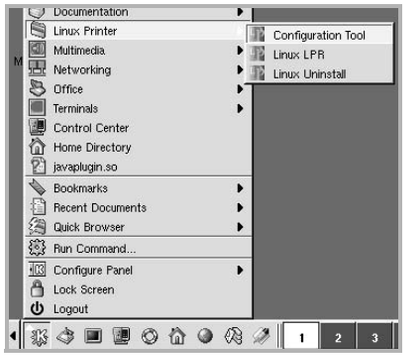

You can also access the Linux Printer Configuration window by typing in "**linux-config**" from the Terminal screen.

2 In the Linux Printer Configuration window, select the **Uninstall** command from the **File** menu.

3 The Administrator Login window appears. Type in "**root**" in the **Login** field and enter the system password. Click **Proceed**.

NOTE: You must log in as a super user (root) to uninstall the printer software. If you are not a super user, ask your system administrator.

4 A message window asking for confirmation to proceed with the uninstallation appears. Click **Yes**.

5 Select **Complete uninstall** and then click **Uninstall**.

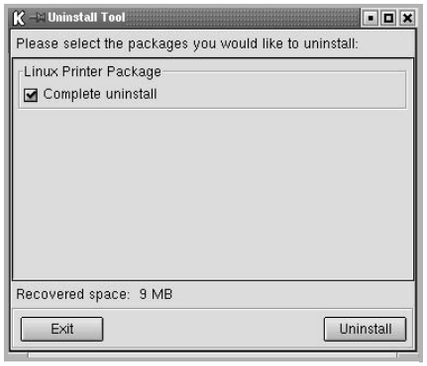

6 Click **OK** to begin uninstallation.

7 When the uninstallation is completed, click **Finished**.

Using the Configuration Tool

The configuration tool accesses administrative tasks, including adding and removing new printers, and changing their global settings. Regular users can also run it to easily inspect job queues, examine printer properties and changing their local preferences.

To access the Configuration Tool:

1 From the Startup Menu icon at the bottom of the screen, select **Linux Printer** and then **Configuration Tool**. The Linux Printer Configuration window appears.

You can also open this window from the Terminal screen by typing in "**linux-config**."

2 The Linux Printer Configuration window shows a list of installed printers in the left pane. The right pane shows a number of tabs that display information regarding the currently selected printer.

Select your printer driver, if not currently selected.

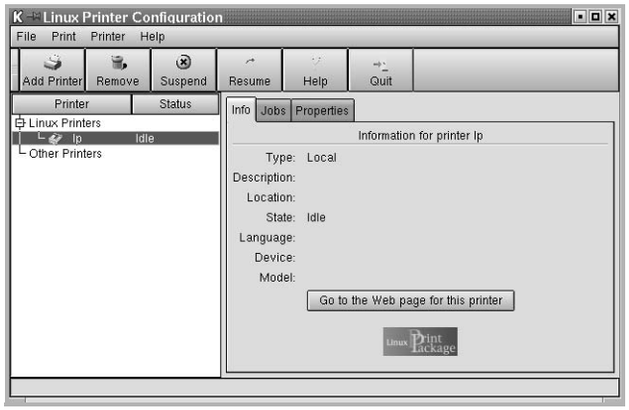

3 The **Info** tab shows general information about the printer.

If you are an Internet user, you can click **Go to the Web page for this printer** to access the Samsung web page.

Click the **Job** tab to inspect and manage the job queue for the selected printer. You can suspend, resume, or delete a specific job(s) in the queue. If you drag a specific job(s), you can drop it into the print queue of another printer.

The **Properties** tab allows you to change the default printer settings.

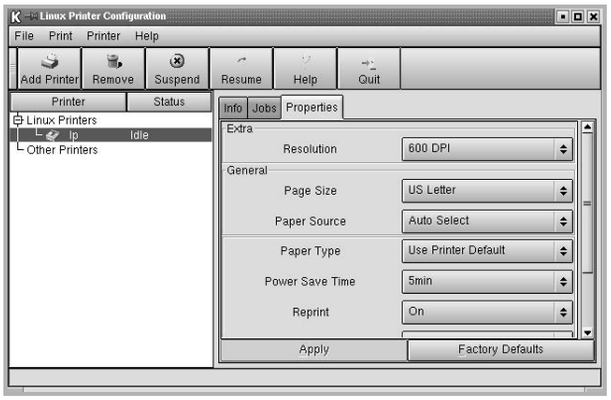

NOTE: Regular users are able to override the system-wide default settings defined by the administrator. When a regular user clicks **Apply**, these custom settings will be saved in the user's profile and may be used later with LLPR. If the administrator is running the configuration tool, then the settings will be saved as the new global defaults.

Changing LLPR Properties

You can fine-tune the printer's properties by opening the LLPR Properties window.

To open the LLPR Properties window:

1 From the application you are using, select the **Print** command.

2 When the Linux LPR window opens, click **Properties**.

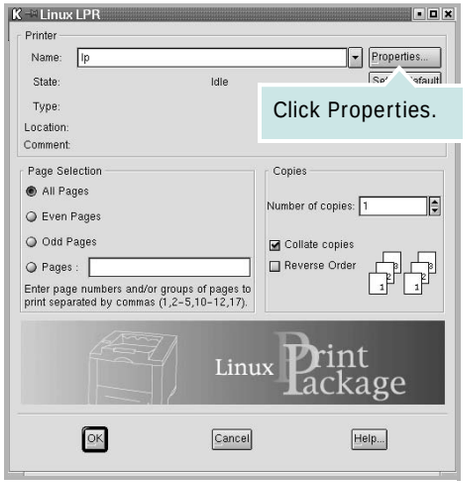

You can also open the LLPR Properties window in the following ways:

- From the Startup Menu icon at the bottom of the screen, select **Linux Printer**, and then **Linux LPR**.
- If the Linux Printer Configuration window is currently open, select **Test Print** from the **Print** menu.

3 The LLPR Properties window opens.

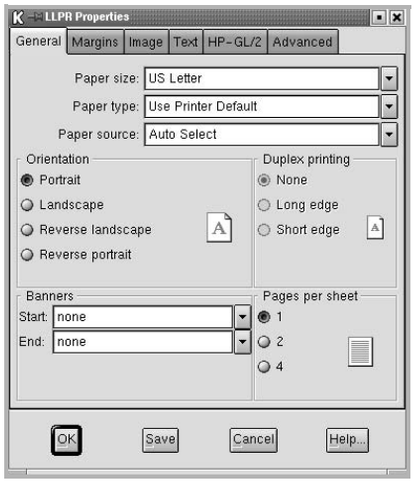

You will see the following six tabs at the top of the window:

- **General** - allows you to change the paper size, the paper type, the paper source, the orientation of the documents, enable the duplex feature, add start and end banners, and change the number of pages per sheet.
- **Margins** - allows you to specify the page margins. The graphics on the right show the current settings. These margins do not apply when printing regular PostScript data.
- **Image** - allows you to set image options that will be used when printing image files, i.e., when a non-PostScript document is passed to LLPR on the command line. Color settings will also take effect for postscript documents.
- **Text** - allows you to select the text density and turn the syntax coloring on or off.
- **HP-GL/2** - allows you to set default options to print HP-GL/2 format documents, used by some plotters.
- **Advanced** - allows you to override the default settings for the printer.

If you click the **Save** button at the bottom of the window, the options will be retained between LLPR sessions.

Use the **Help** button to view details about the options in the window.

4 To apply the options, click **OK** in the LLPR Properties window. You will return to the Linux LPR window. To start printing, click **OK**.

7 Using Your Printer with a Macintosh

Your printer supports Macintosh systems with a built-in USB interface or 10/100 Base-TX network interface card. When you print a file from a Macintosh computer, you can use the CUPS driver by installing the PPD file.

NOTE: ***Some printers do not support a network interface. Make sure that your printer supports a network interface by referring to Printer Specifications in your Printer User's Guide.***

This chapter includes:

- **Installing Software for Macintosh**
- **Setting Up the Printer**
- **Printing**

Installing Software for Macintosh

The CD-ROM that came with your printer provides you with the PPD file that allows you to use the CUPS driver or Apple LaserWriter driver ***(only available when you use a printer which supports the PostScript driver)***, for printing on a Macintosh computer.

Verify the following before you install the printer software:

Item	Requirements
Operating System	Mac OS 10.3.x
RAM	128 MB
Free Disk Space	200 MB

Install the Printer driver

1. Make sure that you connect your printer to the computer. Turn on your computer and printer.
2. Insert the CD-ROM which came with your printer into the CD-ROM drive.
3. Double-click **CD-ROM icon** that appears on your Macintosh desktop.
4. Double-click the **Installer** folder.
5. Double-click the **Printer** folder.
6. Double-click the **Samsung SPLC Installer** icon.
7. Enter the password and click **OK**.
8. The Samsung SPL Installer window opens. Click **Continue** and then click **Continue**.
9. Select **Easy Install** and click **Install**.
10. After the installation is finished, click **Quit**.

Uninstalling the Printer driver

Uninstall is required if you are upgrading the software, or if installation fails.

1. Insert the CD-ROM which came with your printer into the CD-ROM drive.
2. Double-click **CD-ROM icon** that appears on your Macintosh desktop.
3. Double-click the **Installer** folder.
4. Double-click the **Printer** folder.
5. Double-click the **Samsung SPLC Installer** icon.
6. Enter the password and click **OK**.
7. The Samsung SPL Installer window opens. Click **Continue** and then click **Continue**.
8. Select **Uninstall** and then click **Uninstall**.
9. When the uninstallation is done, click **Quit**.

Setting Up the Printer

Set up for your printer will be different depending on which cable you use to connect the printer to your computer—the network cable or the USB cable.

For a Network-connected Macintosh

NOTE: ***Some printers do not support a network interface. Before connecting your printer, make sure that your printer supports a network interface by referring to Printer Specifications in your Printer User's Guide.***

1. Follow the instructions on "Installing Software for Macintosh" on page 34 to install the PPD and Filter files on your computer.
2. Open **Print Setup Utility** from the **Utilities** folder.
3. Click **Add** on the **Printer List**.
4. Select the **IP Printing** tab.
5. Enter the printer's IP address in the **Printer Address** field.
6. Enter the queue name in the **Queue Name** field. If you cannot determine the queue name for your printer server, try using the default queue first.
7. Select **Samsung** in **Printer Model** and your printer in **Model Name**.
8. Click **Add**.
9. Your printer's IP address appears on the **Printer List**, and is set as the default printer.

For a USB-connected Macintosh

1. Follow the instructions on "Installing Software for Macintosh" on page 34 to install the PPD and Filter files on your computer.
2. Open **Print Setup Utility** from the **Utilities** folder.
3. Click **Add** on the **Printer List**.
4. Select the **USB** tab.
5. Select **Samsung** in **Printer Model** and your printer in **Model Name**.
6. Click **Add**.

   Your printer appears on the **Printer List**, and is set as the default printer.

Printing

NOTES:

- The Macintosh printer's properties window that appears in this User's Guide may differ depending on the printer in use. However the composition of the printer properties window is similar.
- ***You can check your printer name in the supplied CD-ROM.***

Printing a Document

When you print with a Macintosh, you need to check the printer software setting in each application you use. Follow these steps to print from a Macintosh.

1. Open a Macintosh application and select the file you want to print.
2. Open the **File** menu and click **Page Setup** (**Document Setup** in some applications).
3. Choose your paper size, orientation, scaling, and other options and click **OK**.

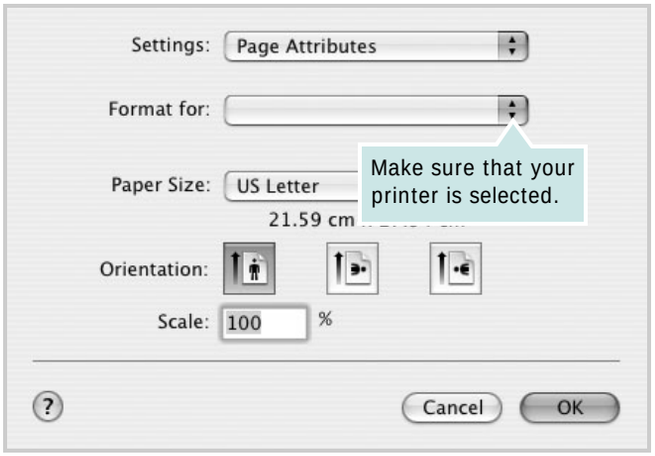

▲ Mac OS 10.3

4. Open the **File** menu and click **Print**.
5. Choose the number of copies you want and indicate which pages you want to print.
6. Click **Print** when you finish setting the options.

Changing Printer Settings

You can use advanced printing features when using your printer.

From your Macintosh application, select **Print** from the **File** menu. The printer name which appears in the printer properties window may differ depending on the printer in use. Except for the name, the composition of the printer properties window is similar.

Layout Setting

The **Layout** tab provides options to adjust how the document appears on the printed page. You can print multiple pages on one sheet of paper.

Select **Layout** from the **Presets** drop-down list to access the following features. For details, see “Printing Multiple Pages on One Sheet of Paper” on the next column.

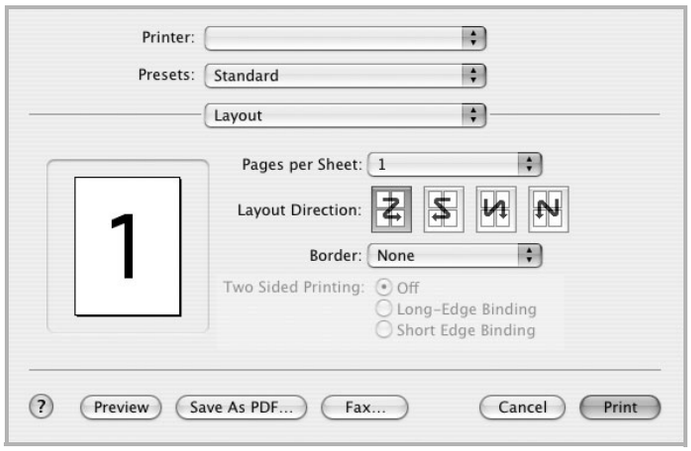

▲ Mac OS 10.3

Printer Features Setting

The **Printer Features** tab provides options for selecting the paper type and adjusting print quality.

Select **Printer Features** from the **Presets** drop-down list to access the following features:

▲ Mac OS 10.3

❶ Paper Type

Make sure that **Paper Type** is set to **Printer Default**. If you load a different type of print material, select the corresponding paper type.

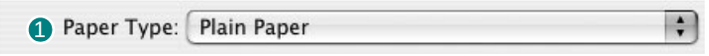

❷ Resolution

You can select the printing resolution. The higher the setting, the sharper the clarity of printed characters and graphics. The higher setting also may increase the time it takes to print a document.

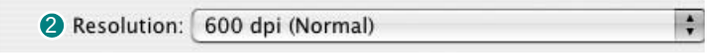

❸ Color Mode

You can set the color options. Setting to **Color** typically produces the best possible print quality for color documents. If you want to print a color document in grayscale, select **Grayscale**.

Printing Multiple Pages on One Sheet of Paper

You can print more than one page on a single sheet of paper. This feature provides a cost-effective way to print draft pages.

1 From your Macintosh application, select **Print** from the **File** menu.

2 Select **Layout**.

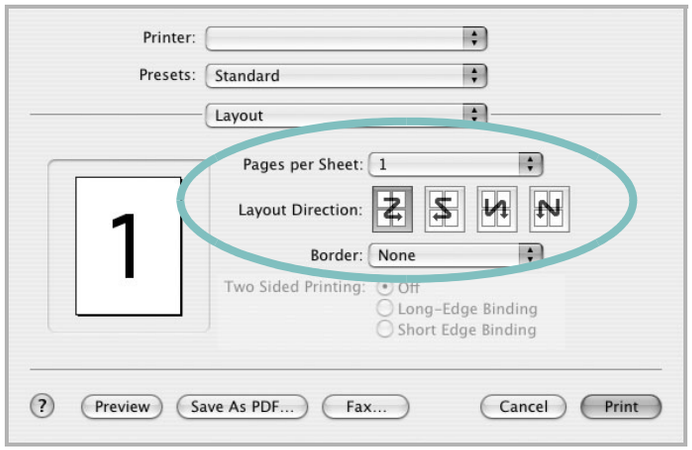

▲ Mac OS 10.3

3 Select the number of pages you want to print on one sheet of paper on the **Pages per Sheet** drop-down list.

4 Select the page order from the **Layout Direction** option.

To print a border around each page on the sheet, select the option you want from the **Border** drop-down list.

5 Click **Print**, and the printer prints the selected number of pages on one side of each page.

INDEX

A
advanced printing, use 18

B
booklet printing 19

D
document, print
- Macintosh 35
- Windows 12

double-sided printing 20

E
Extras properties, set 16

F
favorites settings, use 17

G
Graphics properties, set 15

H
help, use 17

I
install
- printer driver
  - Linux 30
  - Macintosh 34
  - Windows 4

L
language, change 11
Layout properties, set
- Linux 33
- Macintosh 36
- Windows 13

Linux
- configuration tool 32
- driver
  - install 30
  - uninstall 32
- LLP properties 33

M
Macintosh
- driver
  - install 34
  - uninstall 34
- printing 35
- setting up the printer 35

N
n-up printing
- Macintosh 37
- Windows 18

O
orientation, print
- Windows 13

overlay
- create 23
- delete 25
- print 24

P
Paper properties, set 14
paper size, set 14
paper source, set
- Linux 33
- Windows 14

paper type, set
- Linux 33
- Macintosh 36
- Windows 14

poster, print 19
print
- document 12
- fit to page 21
- from Macintosh 35
- from Windows 12
- N-up
  - Macintosh 37
  - Windows 18
- overlay 23
- poster 22
- scaling 21
- watermark 22

printer properties, set
- Linux 33
- Macintosh 36
- Windows 13

printer resolution, set
- Macintosh 36
- Windows 15

printer software
- install
  - Linux 30
  - Macintosh 34
  - Windows 4
- uninstall
  - Linux 32
  - Macintosh 34
  - Windows 11

printing
- booklets 19
- double-sided 20

S
setting
- darkness 15
- favorites 17
- image mode 15
- resolution
  - Macintosh 36
  - Windows 15
- toner save 15
- true-type option 15

software
- install
  - Linux 30
  - Macintosh 34
  - Windows 4
- reinstall
  - Windows 11
- system requirements
  - Linux 29
  - Macintosh 34
- uninstall
  - Linux 32

Macintosh 34
Windows 11
status monitor, use 27
system requirements
Linux 29
Macintosh 34

T

toner save, set 15

U

uninstall, software
Linux 32
Macintosh 34
Windows 11

W

watermark
create 22
delete 23
edit 23
print 22